THIS DOCUMENT IS THE PROPERTY OF KEYSTONE ELECTRONICS CORP. AND SHALL NOT BE REPRODUCED, DISTRIBUTED OR USED AS A BASIS FOR MANUFACTURE WITHOUT PRIOR WRITTEN PERMISSION FROM KEYSTONE ELECTRONICS CORP.

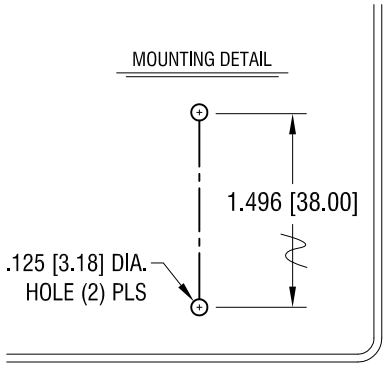

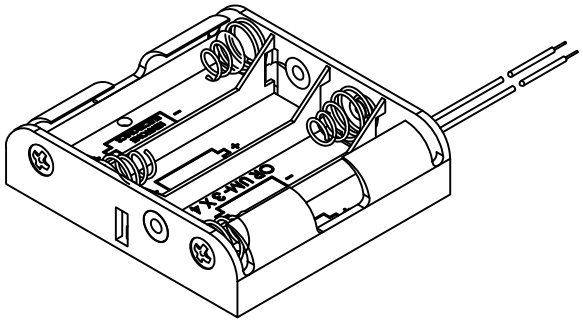

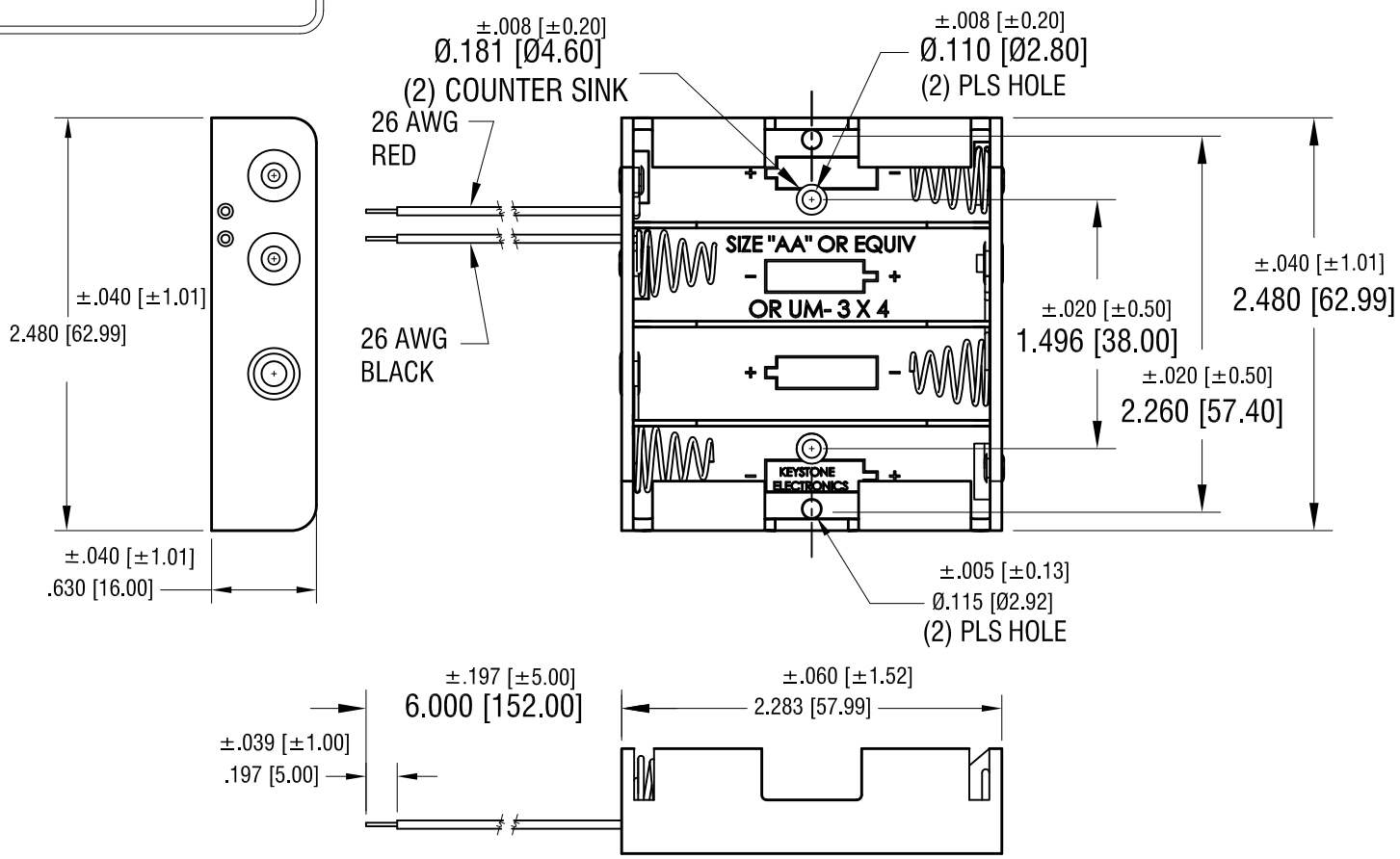

NOTE:

1. HOLDER: MAT'L: POLYPROPYLENE
   SPRING: MAT'L: MUSIC WIRE, .027 [0.70] DIA.
   FINISH: NICKEL PLATE

DATE	DESCRIPTION	REV.
4.14.25	NO CHANGES TO PART.	D
3.26.19	ADD C1 AND C2 CHANGE AS PER ECN 19–040	C
9.13.08	CHANGE AS PER ECN 08–154	B
11.10.99	CHANGE AS PER ECN 99–082	A

KEYSTONE ELECTRONICS CORP.

www.keyelco.com • NEW HYDE PARK, NY 11040 • Tel (516) 328-7500

PART NAME	BATTERY HOLDER (4) 'AA'		
MATERIAL	AS NOTE		
FINISH	AS NOTED	DRN BY BOONE	DATE 3.1.99
		APP'D RH	SCALE .9X
TOLERANCES INCH [MM] DECIMAL ± .015 [± 0.38] ANGULAR ± 1° UNLESS OTHERWISE SPECIFIED	CODE C	DWG NO. 2478	

Downloaded from Arrow.com.