| Rev | AWO # | Description | Date | Appr |
|---|---|---|---|---|
| - | | RELEASED | 5/27/05 | |

APPROVED: _____

DATE: _____ TITLE: _____

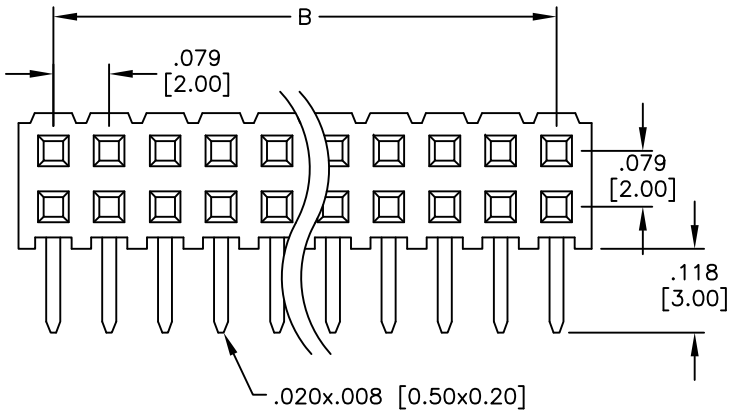


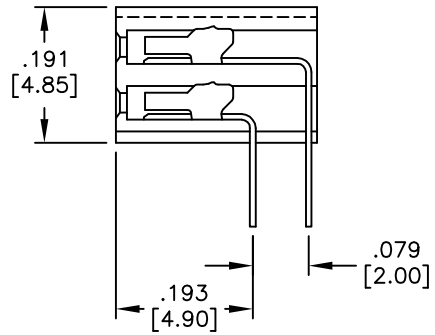


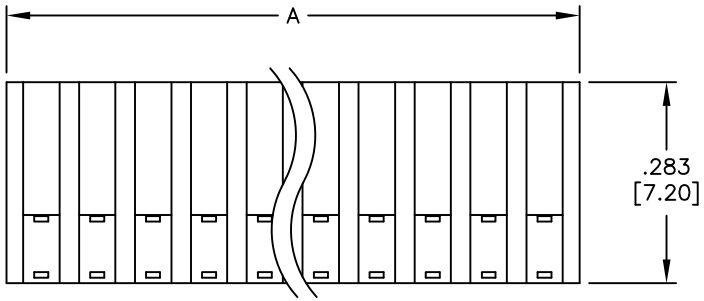


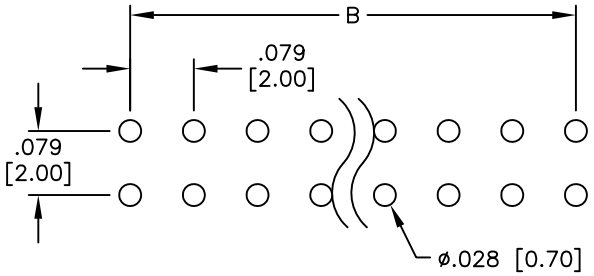


RECOMMENDED PCB LAYOUT

SPECIFICATIONS:
Material:
Insulator: Hi-temp thermoplastic, rated UL 94V-0
Insulator color: Black
Contacts: Phosphor Bronze
Plating:
Gold flash over Nickel underplate overall
Electrical:
Current rating: 1 Amp max.
Contact resistance: 20 mohms max. initial
Insulation resistance: 5,000 Mohms min.
Temperature Rating:
Operating temperature: -40°C to +105°C
Environmental:
Lead free, RoHS compliant

RoHS COMPLIANT

Positions: 04 thru 80
A = .079 [2.00] x No. of Positions per Row
B = .079 [2.00] x No. of Spaces

UNLESS OTHERWISE SPECIFIED
ALL DIMENSIONS ARE INCHES [MM]
TOLERANCES: EXCEPT AS NOTED

| INCHES | | HOLES | |
|---|---|---|---|
| .X | ± .10 | Ø.X | ±.10 |
| .XX | ± .020 | Ø.XX | ±.015 |
| .XXX | ± .015 | Ø.XXX | ±.010 |

| APPROVALS | | DATE |
|---|---|---|
| DRAWN | SS | 5/27/05 |
| CHECKED | | |
| APPROVED | | |


**ADAM TECH**
909 Rahway Avenue, Union, NJ 07083
Phone: 908-687-5000 Fax: 908-687-5710


TITLE
.079 x .079 DUAL ROW RECEPTACLE STRIP
.110 [2.80] HEIGHT, RIGHT ANGLE

| SIZE | PART NO. | REV. |
|---|---|---|
| X | 2RS2R-XX-G | - |

REF: | SCALE: NTS | SHEET 1 OF 1

Downloaded from Arrow.com.