PART NAME	NON-METALLIC ENCLOSURE (STYLE A)	PART No.	NBA-10142 & NBA-10162

MATERIAL:

SOLID BODY & COVER _____ ABS/PC BLENDED PLASTIC
UL94-5VB FLAMMABILITY RATING

CLEAR COVER _____ POLYCARBONATE PLASTIC
UL94V-0 FLAMMABILITY RATING
UV STABILIZED

LATCHES, HINGES &
WALL MOUNTING BRACKETS __ STAINLESS STEEL

FINISH:

BODY _____ LIGHT GRAY
COVER _____ LIGHT GRAY OR CLEAR

COVER INCLUDES GRAY POLY-URETHANE GASKET.

NOTE: UNIT COMES COMPLETE WITH (4) WALL MOUNTING BRKTS. & (4) M5 x 10mm LG. TRUSS HD. MACHINE SCREWS (NOT SHOWN)

INTERNAL HINGED PANEL MOUNTING BRACKETS, AIR & MOISTURE VENTS, STAINLESS STEEL LOCKING HASP AND GALVANIZED STEEL INTERNAL PANEL ARE NOT INCLUDED, BUT CAN BE PURCHASED SEPARATELY.

INDUSTRY STANDARDS:
UL508 TYPE 1, 2, 4, 4X INDOOR, 12 & 13
NEMA TYPE 1, 2, 4, 4X, 12 & 13
IEC529-IP65

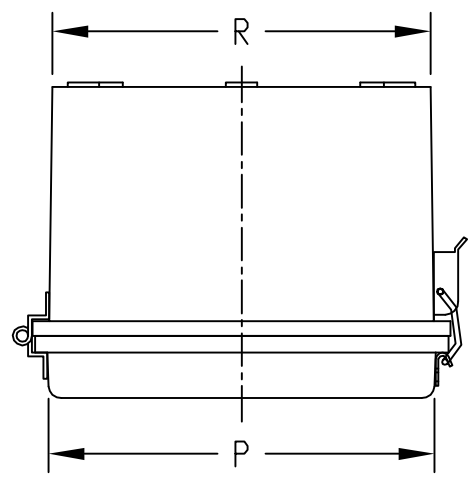

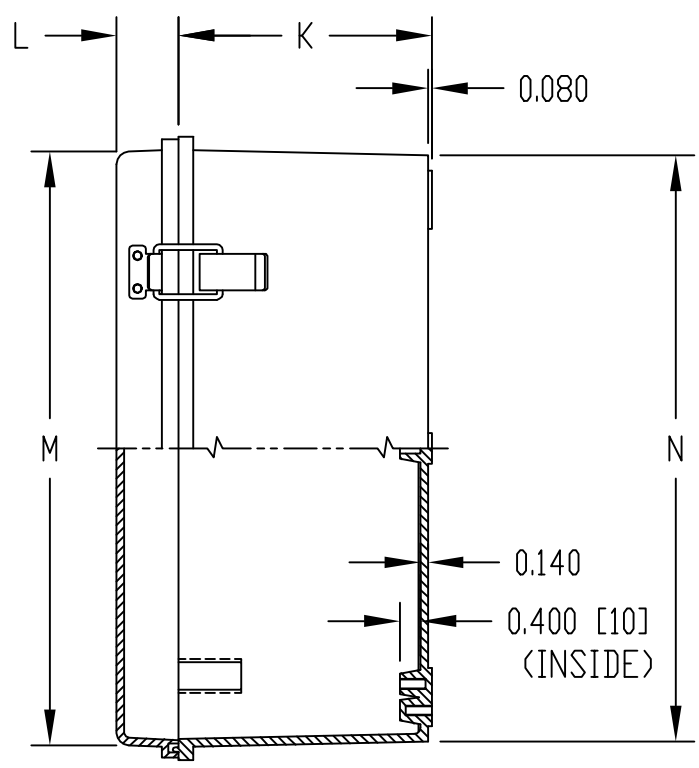

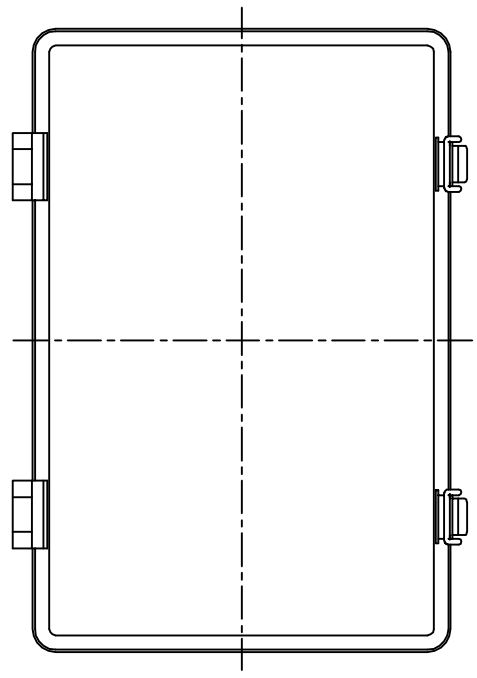

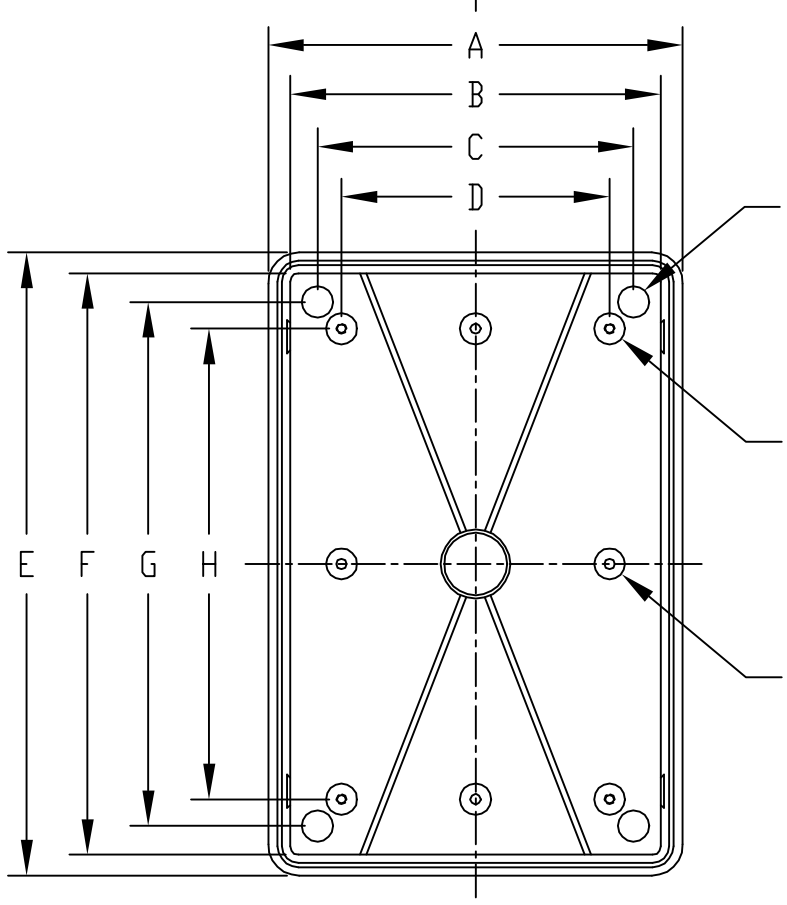

0.590 [15] DIA. BOSS WITH M5 x 0.8mm THREADED BRASS INSERT (4) PLACES (FAR SIDE)

0.590 [15] DIA. BOSS WITH M5 x 0.8mm THREADED BRASS INSERT (4) PLACES

0.590 [15] DIA. BOSS WITH 0.197 [5] DIA. HOLE x 0.395 [10] DEEP (4) PLACES BOSSES ACCEPT M6 METRIC OR 0.250" STD. SHEET METAL SCREWS x 0.375 [9] LG. (NOT SUPPLIED)

VIEW LESS COVER

DIMENSIONS = INCHES [MILLIMETERS]

NOTE: ALL DIMENSIONS HAVE ±0.039 [±1] TOLERANCE UNLESS OTHERWISE SPECIFIED

PART NO.		DIMENSIONS													
SOLID COVER	CLEAR COVER	A	B	C	D	E	F	G	H	K	L	M	N	P	R
NBA-10142	NBA-10162	7.850	7.020	5.986	5.078	11.807	11.013	9.921	8.912	4.797	1.175	11.245	11.100	7.300	7.155
		[199]	[178]	[152]	[129]	[300]	[280]	[252]	[226]	[122]	[30]	[286]	[282]	[185]	[182]

Revised 26JUN07

Downloaded from Arrow.com.