AT25SF321B

32-Mbit SPI Serial Flash Memory with Dual I/O and Quad I/O Support

Features

- Single 2.7 V - 3.6 V Single Supply Voltage
- Serial Peripheral Interface (SPI) Compatible
  - Supports SPI modes 0 and 3
  - Supports dual output operations (1,1,2)
  - Supports quad output operations (1-1-4)
  - Supports quad I/O / XiP operations (1-4-4, 0-4-4)
- 133 MHz maximum operating frequency
- Read operations
  - Fast read up to 133 MHz
  - Continuous read (with 8/16/32/64-byte wrap)
- Flexible erase architecture and time
  - Block erase 4 kB: 55 ms (typical)
  - Block erase 32 kB and 64 kB: 120 ms and 200 ms (typical)
  - Full chip erase: 10 seconds (typical)
- Flexible programming and time
  - Page/byte program: from 1 to 256 bytes
  - Page program time: 0.4 ms (typical)
- Erase program suspend resume
- JEDEC Standard Manufacturer and Device ID
- Memory protection support
  - User-definable protected area at start or end of memory array
  - Enable/disable protection with $\overline{WP}$ pin
- 3 x 256-byte One-Time Programmable (OTP) security registers
- Serial Flash Discoverable Parameters (SFDP) register
- Low power dissipation
  - Standby current: 13 µA (typical)
  - Deep power-down current: 1 µA (typical)
- Endurance: 100,000 program and erase cycles
- Data retention: 20 Years
- Temperature range (-40 °C to 85 °C)
- Industry standard green (Pb/Halide-free/RoHS compliant) package options
  - 8-pin, 150-mil Narrow SOIC
  - 8-pin, 208-mil Wide SOIC
  - 8-pad, 5 x 6 x 0.6 mm DFN
  - Die Wafer Form

© 2025 Renesas Electronics

Downloaded from Arrow.com.

Contents

Features 1
Figures 4
Tables 5
1. Product Overview 6
2. Pin Descriptions and Package Pinouts 7
3. Block Diagram 9
4. Memory Array 10
5. Device Operation 12
5.1 Dual Output Read (1-1-2) 12
5.2 Dual I/O Read (1-2-2) 12
5.3 Quad Output Read (1-1-4) 12
5.4 Quad I/O Read (1-4-4) 12
6. Commands and Addressing 13
7. Read Commands 15
7.1 Read Array (0Bh and 03h) 15
7.2 Dual-Output Read Array (3Bh) 16
7.3 Dual-I/O Fast Read Array (BBh) 17
7.4 Quad Output Fast Read Array (6Bh) 19
7.5 Quad-I/O Fast Read Array (EBh) 20
7.6 Quad-I/O Word Fast Read (E7h) 23
7.7 Read Serial Flash Discoverable Parameter (5Ah) 24
8. Program and Erase Commands 25
8.1 Byte/Page Program (02h) 25
8.2 Quad Page Program (32h) 26
8.3 Block Erase (20h, 52h, or D8h) 27
8.4 Chip Erase (60h or C7h) 28
8.5 Program/Erase Suspend (75h) 29
8.6 Program/Erase Resume (7Ah) 30
9. Protection Commands and Features 31
9.1 Write Enable (06h) 31
9.2 Write Disable (04h) 31
9.3 Non-Volatile Protection 32
9.4 Protected States and the Write Protect Pin 33
9.5 Enable Reset (66h) and Reset Device (99h) 34
10. Security Register Commands 35
10.1 Read Unique ID Number (4Bh) 35
10.2 Erase Security Registers (44h) 36
10.3 Program Security Registers (42h) 37
10.4 Read Security Registers (48h) 38
11. Status Register Commands 39
11.1 Read Status Register (05h, 35h, and 15h) 39
11.2 Write Status Register (01h) 43
11.3 Write Enable for Volatile Status Register (50h) 44

© 2025 Renesas Electronics

Downloaded from Arrow.com.

12. Other Commands and Functions 45
12.1 Read Manufacturer and Device ID (9Fh) 46
12.2 Read ID (Legacy Command) (90h) 47
12.3 Dual I/O Read Manufacture ID/ Device ID (92h) 48
12.4 Quad I/O Read Manufacture ID / Device ID (94h) 49
12.5 Deep Power-Down (B9h) 50
12.6 Resume from Deep Power-Down (ABh). 51
12.7 Hold Function 52
13. Electrical Specifications 53
13.1 Absolute Maximum Ratings 53
13.2 DC and AC Operating Range 53
13.3 AC Characteristics - Maximum Clock Frequencies 54
13.4 Power-Up Conditions 55
13.5 Input Test Waveforms and Measurement Levels 55
13.6 Output Test Load 56
14. AC Waveforms 56
15. Ordering Information 58
15.1 8-lead, 150-mil Narrow SOIC 59
15.2 8-lead, 208-mil Wide SOIC. 60
15.3 8-Pad, 5 x 6 x 0.6 mm DFN 61
16. Revision History 62

© 2025 Renesas Electronics

Downloaded from Arrow.com.

Figures

Figure 1. 8-lead SOIC (150-mil and 208-mil) — Top View . . . 8
Figure 2. 8-pad 5 x 6 DFN — Top View . . . 8
Figure 3. Block Diagram . . . 9
Figure 4. SPI Mode 0 and 3 . . . 12
Figure 5. Read Array - 03h Opcode . . . 15
Figure 6. Read Array - 0Bh Opcode . . . 15
Figure 7. Dual-Output Read Array . . . 16
Figure 8. Dual-I/O Fast Read Array (Initial command or previous M5, M4 ¹ 1,0) . . . 17
Figure 9. Dual-I/O Fast Read Array (Previous command set M5, M4 = 1,0) . . . 18
Figure 10. Quad-Output Fast Read Array . . . 19
Figure 11. Quad-I/O Read Array (Initial command or previous M5, M4 ≠ 1,0) . . . 20
Figure 12. Quad I/O Read Array with Continuous Read Mode (Previous Command Set M5, M4 = 1,0) . . . 21
Figure 13. Set Burst with Wrap Timing (SPI Mode) . . . 22
Figure 14. Quad I/O Word Fast Read Timing (Initial Command Set M5, M4 ≠ 1,0) SPI Mode . . . 23
Figure 15. Quad I/O Word Fast Read Timing (Previous Command Set M5, M4 = 1,0) SPI Mode . . . 23
Figure 16. Read Serial Flash Discoverable Parameter Command Sequence Diagram . . . 24
Figure 17. Byte Program . . . 25
Figure 18. Page Program . . . 26
Figure 19. Quad Page Program (32h) Timing . . . 26
Figure 20. Block Erase Timing . . . 27
Figure 21. Chip Erase Timing . . . 28
Figure 22. Erase/Program Suspend Timing . . . 29
Figure 23. Erase/Program Resume Command Timing . . . 30
Figure 24. Write Enable Timing . . . 31
Figure 25. Write Disable Timing . . . 31
Figure 26. Enable Reset (66h) and Reset Device (99h) Command Timing (SPI Mode) . . . 34
Figure 27. Read Unique ID Timing (SPI Mode) . . . 35
Figure 28. Erase Security Register Page . . . 36
Figure 29. Program Security Registers . . . 37
Figure 30. Read Security Registers . . . 38
Figure 31. Read Status Register 1 . . . 40
Figure 32. Read Status Register 2 . . . 40
Figure 33. Write Status Register . . . 43
Figure 34. Write Enable for Volatile Status Register . . . 44
Figure 35. Read Manufacturer and Device ID . . . 46
Figure 36. Read ID (Legacy Command) . . . 47
Figure 37. Dual I/O Read Manufacture ID/ Device ID Timing . . . 48
Figure 38. Quad I/O Read Manufacture ID / Device ID Sequence Diagram . . . 49
Figure 39. Deep Power-Down . . . 50
Figure 40. Resume from Deep Power-Down . . . 51
Figure 41. Resume from Deep Power-Down and Read Device ID Timing . . . 52
Figure 42. Power-Up Timing and Voltage Levels . . . 55
Figure 43. Serial Input Timing . . . 56
Figure 44. Serial Output Timing . . . 56
Figure 45. $\overline{\text{WP}}$ Timing for Write Status Register Command When BPL = 1 . . . 57
Figure 46. $\overline{\text{HOLD}}$ Timing – Serial Input . . . 57
Figure 47. $\overline{\text{HOLD}}$ Timing – Serial Output . . . 57

© 2025 Renesas Electronics

Downloaded from Arrow.com.

Tables

Table 1. Pin Descriptions 7
Table 2. Memory Architecture Diagram: Block Erase Detail 10
Table 3. AT25SF321B Device Block Memory Map — Page Erase and Page Program 11
Table 4. AT25SF321B Command Table 13
Table 5. Set Burst with Wrap Command Functions 22
Table 6. Memory Array with CMP = 0 32
Table 7. Memory Array Protection with CMP = 1 33
Table 8. Security Register Addresses for Erase Security Register Page Command 36
Table 9. Security Register Addresses for Program Security Registers Command 37
Table 10. Security Register Addresses for Read Security Registers Command 38
Table 11. Status Register 1 Bit Assignments 39
Table 12. Status Register 2 Bit Assignments 40
Table 13. Status Register 3 Bit Assignments 41
Table 14. DRV1, DRV0 41
Table 15. Status Register Protection Table 41
Table 16. Write Status Register 1 43
Table 17. Write Status Register 2 43
Table 18. Write Status Register 3 44
Table 19. Manufacturer and Device ID Information 45

© 2025 Renesas Electronics

Downloaded from Arrow.com.

1. Product Overview

The AT25SF321B is a Serial Peripheral Interface (SPI) Flash memory device designed for use in a wide variety of high-volume industrial, consumer and connected applications.

It can be used for storing program memory that is booted from Flash memory into embedded or external RAM; it can also be used for directly executing the program code from the Flash memory (execute in place [XiP]).

XiP is specifically supported by features which enhance read speed:

- Quad-SPI, which allows reading four bits in one clock cycle.
- Continuous read mode (0-4-4 command format), which removes the need to send a command opcode.
- High SPI clock frequency.

These features allow fast response from the Flash memory whenever the host must fetch commands or data from it.

© 2025 Renesas Electronics

Downloaded from Arrow.com.

2. Pin Descriptions and Package Pinouts

Table 1. Pin Descriptions

Symbol	Name and Function	Asserted State	Type
$\overline{CS}$	**CHIP SELECT** Asserting the $\overline{CS}$ pin selects the device. When the $\overline{CS}$ pin is deasserted, the device is deselected and normally be placed in standby mode. A high-to-low transition on the $\overline{CS}$ pin is required to start an operation; a low-to-high transition is required to end an operation. When ending an internally self-timed operation, such as a program or erase cycle, the device does not enter the standby mode until the operation is complete. To ensure correct power-up sequencing, it is recommended to add a 10k Ohm pull-up resistor from $\overline{CS}$ to V_{CC}. This ensures $\overline{CS}$ ramps together with V_{CC} during power-up.	Low	Input
SCK	**SERIAL CLOCK** This pin provides a clock to the device. Command, address, and input data present on the SI pin is latched in on the rising edge of SCK, while output data on the SO pin is clocked out on the falling edge of SCK.	-	Input
SI (I/O_0)	**SERIAL INPUT** The SI pin is used for all data input, including command and address sequences. Data on the SI pin is always latched in on the rising edge of SCK. With the Dual-Output and Quad-Output Read commands, the SI pin becomes an output pin (I/O_0) in conjunction with other pins to allow two or four bits of data (on I/O_{3-0}) to be clocked in on every falling edge of SCK. Data present on the SI pin is ignored whenever the device is deselected ($\overline{CS}$ is deasserted).	-	Input/Output
SO (I/O_1)	**SERIAL OUTPUT** Data on the SO pin is clocked out on the falling edge of SCK. With the Dual-Output Read commands, the SO pin remains an output pin (I/O_0) in conjunction with other pins to allow two bits of data (on I/O_{1-0}) to be clocked in on every falling edge of SCK. The SO pin is in a high-impedance state whenever the device is deselected ($\overline{CS}$ is deasserted).	-	Input/Output
$\overline{WP}$ (I/O_2)	**WRITE PROTECT** This pin is used either for write-protection, in which case it is referred to as $\overline{WP}$, or as one of the quad-SPI I/O pins, in which case it is referred to as IO_2. When the Quad Enable (QE) bit of Status Register 2 is 0, and the SRP1 and SRP0 bits are 0 and 1, respectively, the pin can be used for write-protection. It then can be asserted (driven low) to protect the Status Registers from modification. When the Quad Enable (QE) bit of Status Register 2 is 1, quad-SPI communication is enabled, and the pin is used as I/O pin IO_2 in any command that makes use of quad-SPI. In this setting, do not use the pin for write-protection. The $\overline{WP}$ pin is internally pulled-high and can be left floating if not used.	-	Input/Output

© 2025 Renesas Electronics

Downloaded from Arrow.com.

Table 1. Pin Descriptions *(continued)*

Symbol	Name and Function	Asserted State	Type
$\overline{HOLD}$ (I/O_3)	**HOLD** This pin is used either for pausing communication, in which case it is referred to as $\overline{HOLD}$, or as one of the quad-SPI I/O pins, in which case it is referred to as IO_3. When the Quad Enable (QE) bit of Status Register 2 is 0, this pin is used as a $\overline{HOLD}$ pin. When the QE bit of Status Register 2 is 1, quad-SPI communication is enabled, and the pin is used as I/O pin IO_3 in any command that makes use of quad-SPI. In this setting, do not use the pin for pausing communication. The $\overline{HOLD}$ pin is used to pause a SPI sequence without resetting the clocking sequence. To enable the HOLD mode, the $\overline{CS}$ must be low. The HOLD mode effect is on with the falling edge of the $\overline{HOLD}$ signal with SCK being low. The HOLD mode ends on the rising edge of $\overline{HOLD}$ signal with SCK being low. The $\overline{HOLD}/IO_3$ pin is internally pulled-high and can be left floating if not used.	-	Input/Output
V_{CC}	**DEVICE POWER SUPPLY** The V_{CC} pin supplies the source voltage to the device.	-	Power
GND	**GROUND** The ground reference for the power supply. Connect GND to the system ground.	-	Power

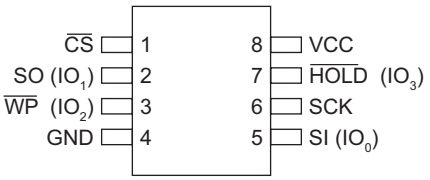

Figure 1. 8-lead SOIC (150-mil and 208-mil) — Top View

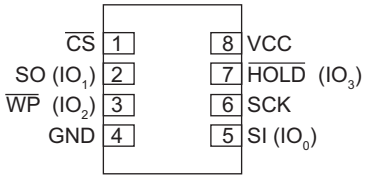

Figure 2. 8-pad 5 x 6 DFN — Top View

© 2025 Renesas Electronics

Downloaded from Arrow.com.

3. Block Diagram

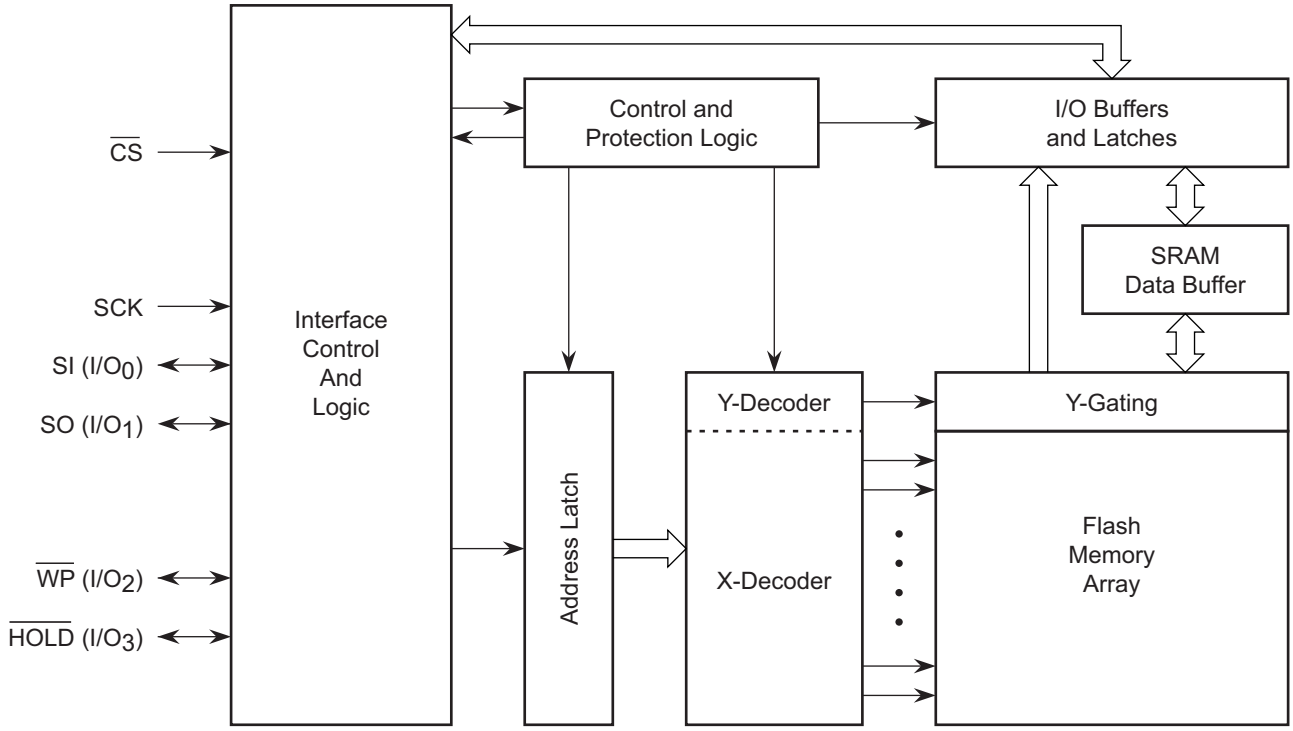

Note: I/O_{3-0} pin naming convention is used for Dual-I/O and Quad-I/O commands.

Figure 3. Block Diagram

© 2025 Renesas Electronics

Downloaded from Arrow.com.

4. Memory Array

To provide the greatest flexibility, the memory array of the AT25SF321B can be erased in four levels of granularity, including a full-chip erase. The size of the erase blocks is optimized for both code and data storage applications, allowing both code and data segments to reside in their own erase regions. The Memory Architecture Diagram illustrates each erase level.

The physical block size for this device is 4 Mbit.

Table 2. Memory Architecture Diagram: Block Erase Detail

64-kbyte Block Erase (D8h)	32-kbyte Block Erase (52h)	4-kbyte Block Erase (20h)	Block Address Range
64 kBytes (block 63)	32 kBytes (block 127)	4 kBytes (Block 1023)	3FF000h - 3FFFFFh
		4 kBytes (B1022)	3FE000h - 3FEFFFh
		4 kBytes (B1021)	3FD000h - 3FDFFFh
		4 kBytes (B1020)	3FC000h - 3FCFFFh
		4 kBytes (B1019)	3FB000h - 3FBFFFh
		4 kBytes (B1018)	3FA000h - 3FAFFFh
		4 kBytes (B1017)	3F9000h - 3F9FFFh
		4 kBytes (B1016)	3F8000h - 3F8FFFh
	32 kBytes (block 126)	4 kBytes (B1015)	3F7000h - 3F7FFFh
		4 kBytes (B1014)	3F6000h - 3F6FFFh
		4 kBytes (B1013)	3F5000h - 3F5FFFh
		4 kBytes (B1012)	3F4000h - 3F4FFFh
		4 kBytes (B1011)	3F3000h - 3F3FFFh
		4 kBytes (B1010)	3F2000h - 3F2FFFh
		4 kBytes (B1009)	3F1000h - 3F1FFFh
		4 kBytes (B1008)	3F0000h - 3F0FFFh
64 kBytes (block 62) to 64 kBytes (block 1)	32 kBytes (block 125) to 32 kBytes (block 2)	4 kBytes (B1007) to 4 kBytes (B16)	3EF000h - 3EFFFFh to 010000h - 010FFFh
64 kBytes (block 0)	32 kBytes (block 1)	4 kBytes (B15)	00F000h - 00FFFFh
		4 kBytes (B14)	00E000h - 00EFFFh
		4 kBytes (B13)	00D000h - 00DFFFh
		4 kBytes (B12)	00C000h - 00CFFFh
		4 kBytes (B11)	00B000h - 00BFFFh
		4 kBytes (B10)	00A000h - 00AFFFh
		4 kBytes (B9)	009000h - 009FFFh
		4 kBytes (B8)	008000h - 008FFFh
	32 kBytes (block 0)	4 kBytes (B7)	007000h - 007FFFh
		4 kBytes (B6)	006000h - 006FFFh
		4 kBytes (B5)	005000h - 005FFFh
		4 kBytes (B4)	004000h - 004FFFh
		4 kBytes (B3)	003000h - 003FFFh
		4 kBytes (B2)	002000h - 002FFFh
		4 kBytes (B1)	001000h - 001FFFh
		4 kBytes (B0)	000000h - 000FFFh

© 2025 Renesas Electronics

Downloaded from Arrow.com.

Table 3. AT25SF321B Device Block Memory Map — Page Erase and Page Program

4 -kbyte Blocks	256 Byte Page Erase	1 - 256 Byte Page Program
4 kBytes (Block 1023)	256 Bytes	3FFF00h - 3FFFFFh
4 kBytes (B1022)	256 Bytes	3FFE00h - 3FFEFFh
4 kBytes (B1021)	256 Bytes	3FFD00h - 3FFDFFh
4 kBytes (B1020)	256 Bytes	3FFC00h - 3FFCFFh
4 kBytes (B1019)	256 Bytes	3FFB00h - 3FFBFFh
4 kBytes (B1018)	256 Bytes	3FFA00h - 3FFAFFh
4 kBytes (B1017)	256 Bytes	3FF900h - 3FF9FFh
4 kBytes (B1016)	256 Bytes	3FF800h - 3FF8FFh
4 kBytes (B1015)	256 Bytes	3FF700h - 3FF7FFh
4 kBytes (B1014)	256 Bytes	3FF600h - 3F6FFFh
4 kBytes (B1013)	256 Bytes	3FF500h - 3FF5FFh
4 kBytes (B1012)	256 Bytes	3FF400h - 3FF4FFh
4 kBytes (B1011)	256 Bytes	3FF300h - 3FF3FFh
4 kBytes (B1010)	256 Bytes	3FF200h - 3FF2FFh
4 kBytes (B1009)	256 Bytes	3FF100h - 3FF1FFh
4 kBytes (B1008)	256 Bytes	3FF000h - 3FF0FFh
4 kBytes (B1007) to 4 kBytes (B16)	. . .	. . .
4 kBytes (B15)	256 Bytes	000F00h - 000FFFh
4 kBytes (B14)	256 Bytes	000E00h - 000EFFh
4 kBytes (B13)	256 Bytes	000D00h - 000DFFh
4 kBytes (B12)	256 Bytes	000C00h - 000CFFh
4 kBytes (B11)	256 Bytes	000B00h - 000BFFh
4 kBytes (B10)	256 Bytes	000A00h - 000AFFh
4 kBytes (B9)	256 Bytes	000900h - 0009FFh
4 kBytes (B8)	256 Bytes	000800h - 0008FFh
4 kBytes (B7)	256 Bytes	000700h - 0007FFh
4 kBytes (B6)	256 Bytes	000600h - 0006FFh
4 kBytes (B5)	256 Bytes	000500h - 0005FFh
4 kBytes (B4)	256 Bytes	000400h - 0004FFh
4 kBytes (B3)	256 Bytes	000300h - 0003FFh
4 kBytes (B2)	256 Bytes	000200h - 0002FFh
4 kBytes (B1)	256 Bytes	000100h - 0001FFh
4 kBytes (B0)	256 Bytes	000000h - 0000FFh

© 2025 Renesas Electronics

Downloaded from Arrow.com.

5. Device Operation

The AT25SF321B is controlled by a set of commands sent from a host controller, SPI Master. The SPI Master communicates with the AT25SF321B through the SPI bus, which consists of four pins: Chip Select ($\overline{CS}$), Serial Clock (SCK), Serial Input (SI), and Serial Output (SO).

The SPI protocol defines a total of four modes of operation (mode 0, 1, 2, or 3). The AT25SF321B supports the two most common modes, SPI modes 0 and 3. For these modes, data is latched in on the rising edge of SCK and output on the falling edge of SCK.

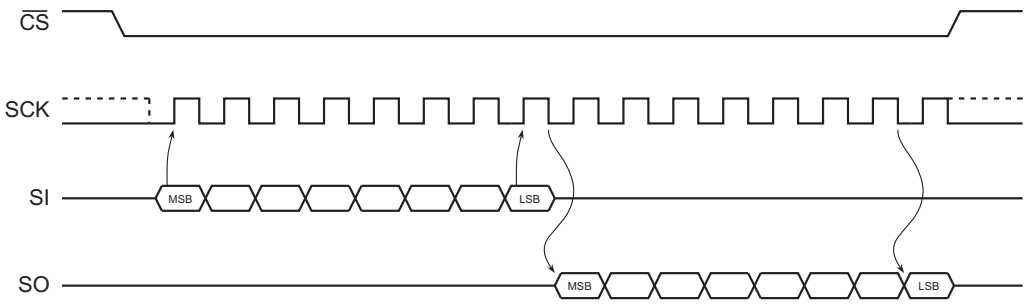

Figure 4. SPI Mode 0 and 3

5.1 Dual Output Read (1-1-2)

The AT25SF321B features a Dual-Output Read mode that allows two bits of data to be clocked out of the device every clock cycle to improve throughput. To do this, both the SI and SO pins are used as outputs for the transfer of data bytes. With the Dual-Output Read Array command, the SI pin becomes an output along with the SO pin.

5.2 Dual I/O Read (1-2-2)

The AT25SF321B supports Dual I/O (1-2-2) transfers, which enhance throughput over the standard SPI mode. This mode transfers the command on the SI pin, but the address and data are transferred on the SI and SO pins. This means that only half the number of clocks are required to transfer the address and data.

5.3 Quad Output Read (1-1-4)

The AT25SF321B features a Quad-Output Read mode that allows four bits of data to be clocked out of the device every clock cycle to improve throughput. To do this, the SI, SO, $\overline{WP}$, and $\overline{HOLD}$ pins are used as outputs for the transfer of data bytes. With the Quad-Output Read Array command, the SI, $\overline{WP}$, and $\overline{HOLD}$ pins become outputs along with the SO pin.

5.4 Quad I/O Read (1-4-4)

The AT25SF321B supports Quad I/O (1-4-4) transfers, which enhance throughput over the standard SPI mode. This mode transfers the command on the SI pin, but the address and data are transferred on the SI, SO, $\overline{WP}$, and $\overline{HOLD}$ pins. This means that only a quarter of the number of clocks are required to transfer the address and data. With the Quad I/O Read Array command, the SI, $\overline{WP}$, and $\overline{HOLD}$ and SO pins become inputs during the address transfer, and switch to outputs during the data transfer.

© 2025 Renesas Electronics

Downloaded from Arrow.com.

6. Commands and Addressing

A valid command or operation must be started by asserting the $\overline{CS}$ pin. After that, the host controller must clock out a valid 8-bit opcode on the SPI bus. Following the opcode, command-dependent information, such as address and data bytes, can be clocked out by the host controller. All opcode, address, and data bytes are transferred with the most-significant bit (MSB) first. An operation is ended by deasserting the $\overline{CS}$ pin.

Opcodes not supported by the AT25SF321B are ignored, and no operation is started. The device continues to ignore any data presented on the SI pin until the start of the next operation ($\overline{CS}$ pin deasserted, then reasserted). If the $\overline{CS}$ pin is deasserted before complete opcode and address information is sent to the device, the device simply returns to the idle state and waits for the next operation.

Device addressing requires three bytes, representing address bits A23-A0, to be sent. Since the upper address limit of the AT25SF321B memory array is 3FFFFFh, address bits A23-A22 are always ignored by the device.

Table 4. AT25SF321B Command Table

Command Name	Command Opcode	Bus Transfer Type (OP-AD-DA)(1)	Mode Bit Present	Mode Bit Clocks	Wait Cycle Dummy Clocks	# of Data Bytes
System Commands						
Enable Reset	66h	1-0-0	N	0	0	0
Reset Device	99h	1-0-0	N	0	0	0
Deep Power-down	B9h	1-0-0	N	0	0	0
Release Power-down	ABh	1-0-0	N	0	0	0
Read Commands						
Normal Read Data	03h	1-1-1	N	0	0	1+
Fast Read	0Bh	1-1-1	N	0	8	1+
Dual Output Fast read	3Bh	1-1-2	N	0	8	1+
Dual I/O Fast read	BBh	1-2-2	Y	4	0	1+
Dual I/O Fast read (Continuous Mode)	BBh	0-2-2	Y	4	0	1+
Quad Output Fast read	6Bh	1-1-4	N	0	8	1+
Quad I/O Fast read	EBh	1-4-4	Y	2	4	1+
Quad I/O Fast read (Continuous Mode)	EBh	0-4-4	Y	2	4	1+
Word Read Quad I/O	E7h	1-4-4	Y	2	2	1+
Word Read Quad I/O (Continuous Mode)	E7h	0-4-4	Y	2	2	1+
Set Burst With Wrap	77h	1-0-4	N	0	6	1, D[6:4]
Write Commands						
Write Enable	06h	1-0-0	N	0	0	0
Volatile SR Write Enable	50h	1-0-0	N	0	0	0
Write Disable	04h	1-0-0	N	0	0	0
Program Commands						
Page Program	02h	1-1-1	N	0	0	1+
Quad Page Program	32h	1-1-4	N	0	0	1+

© 2025 Renesas Electronics

Downloaded from Arrow.com.

Table 4. AT25SF321B Command Table *(continued)*

Command Name	Command Opcode	Bus Transfer Type (OP-AD-DA)(1)	Mode Bit Present	Mode Bit Clocks	Wait Cycle Dummy Clocks	# of Data Bytes
Erase Commands						
Block Erase (4 kBytes)	20h	1-1-0	N	0	0	0
Block Erase (32 kBytes)	52h	1-1-0	N	0	0	0
Block Erase (64 kBytes)	D8h	1-1-0	N	0	0	0
Chip Erase	C7h/60h	1-0-0	N	0	0	0
Suspend/Resume Commands						
Program/Erase Suspend	75h	1-0-0	N	0	0	0
Program/Erase Resume	7Ah	1-0-0	N	0	0	0
Status Register Commands						
Read Status Register 1	05h	1-0-1	N	0	0	1
Read Status Register 2	35h	1-0-1	N	0	0	1
Read Status Register 3	15h	1-0-1	N	0	0	1
Write Status Register 1	01h	1-0-1	N	0	0	1
Write Status Register 2	31h	1-0-1	N	0	0	1
Write Status Register 3	11h	1-0-1	N	0	0	1
Device Information Commands						
Manufacturer/Device ID	90h	1-1-1	N	0	0	2
Mfgr./Device ID Dual I/O	92h	1-2-2	N	0	4	2
Mfgr./Device ID Quad I/O	94h	1-4-4	N	0	4	2
Read JEDEC ID	9Fh	1-0-1	N	0	0	3
Read Serial Flash Discoverable Parameter	5Ah	1-1-1	N	0	8	1+
OTP Commands						
Erase Security Registers	44h	1-1-0	N	0	0	0
Program Security Registers	42h	1-1-1	N	0	0	1+
Read Security Registers	48h	1-1-1	N	0	8	1+
Read Unique ID Number	4Bh	1-0-1	N	0	32	1+

1. OP = Opcode (command number), AD = Address. DA = Data. 0 indicates the corresponding transfer does not occur in that command. 1 indicates the transfer does occur. For example, 1-0-0 indicates a command transfer occurs, but no address or data transfers occur.

   Op: Opcode or Commands (8-bits): 0 => No Opcode [continuous Read], 1 => 8 clocks for Opcode, 2 => 4 clocks for Opcode, 4 => 2 clocks for opcode.

   AD: Address (24-bits) Only: 0 => No address, Opcode only operation, 1 => 24 clocks for Address, 2 => 12 clocks for address, 4 => 6 clocks for address.

   AD: Address (24-bits) + Mode (8-bits): 2 => 12 clocks for address, 4 clocks for mode [BBh only], 4 => 6 clocks for address, 2 clocks for mode [EBh and E7h].

   DA: Data(8-bits): 1 => 8 clocks for byte, 2 => 4 clocks for byte, 4 => 2 clocks for byte.

© 2025 Renesas Electronics

Downloaded from Arrow.com.

7. Read Commands

7.1 Read Array (0Bh and 03h)

The Read Array command can be used to sequentially read a continuous stream of data from the device by providing the clock pin once the initial starting address is specified. The device incorporates an internal address counter that automatically increments every clock cycle.

To perform the Read Array operation, the $\overline{CS}$ pin first must be asserted, and the appropriate opcode (0Bh or 03h) must be clocked into the device. After the opcode has been clocked in, the three address bytes must be clocked in to specify the starting address location of the first byte to read within the memory array. If the 0Bh opcode is used for the Read Array operation, an additional dummy byte must be clocked into the device after the three address bytes.

After the three address bytes (and the dummy byte, if using opcode 0Bh) have been clocked in, additional clock cycles result in data being output on the SO pin. The data is always output with the MSB of a byte first. When the last byte (3FFFFFh) of the memory array has been read, the device continues reading back at the beginning of the array (000000h). No delays are incurred when wrapping around from the end of the array to the beginning of the array.

Deasserting the $\overline{CS}$ pin terminates the read operation and puts the SO pin into high-impedance state. The $\overline{CS}$ pin can be deasserted at any time and does not require a full byte of data be read.

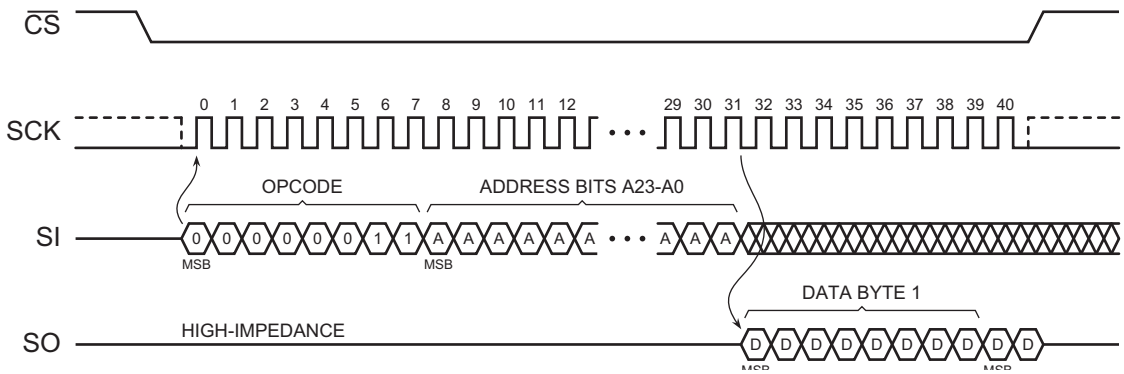

Figure 5. Read Array - 03h Opcode

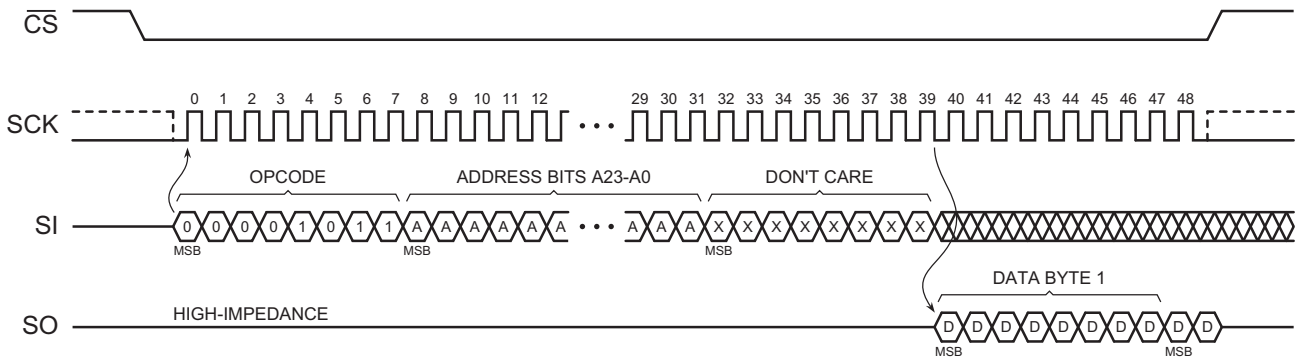

Figure 6. Read Array - 0Bh Opcode

© 2025 Renesas Electronics

Downloaded from Arrow.com.

7.2 Dual-Output Read Array (3Bh)

The Dual-Output Read Array command is similar to the standard Read Array command and can be used to sequentially read a continuous stream of data from the device by providing the clock pin once the initial starting address has been specified. Unlike the standard Read Array command, the Dual-Output Read Array command allows two bits of data to be clocked out of the device on every clock cycle, rather than just one.

To perform the Dual-Output Read Array operation, the $\overline{CS}$ pin must first be asserted; then, the opcode 3Bh must be clocked into the device. After the opcode has been clocked in, the three address bytes must be clocked in to specify the location of the first byte to read within the memory array. Following the three address bytes, a single dummy byte also must be clocked into the device.

After the three address bytes and the dummy byte have been clocked in, additional clock cycles output data on both the I/O_1 and I/O_0 pins. The data is output with the MSB of a byte first, and the MSB is output on the I/O_1 pin. During the first clock cycle, bit seven of the first data byte is output on the I/O_1 pin, while bit six of the same data byte is output on the I/O_0 pin. During the next clock cycle, bits five and four of the first data byte are output on the I/O_1 and I/O_0 pins, respectively. The sequence continues with each byte of data being output after every four clock cycles. When the last byte (3FFFFFh) of the memory array has been read, the device continues reading from the beginning of the array (000000h). There are no delays when wrapping around from the end of the array to the beginning of the array. Deasserting the $\overline{CS}$ pin terminates the read operation and puts the I/O_1 and I/O_0 pins into a high-impedance state. The $\overline{CS}$ pin can be deasserted at any time and does not require that a full byte of data be read.

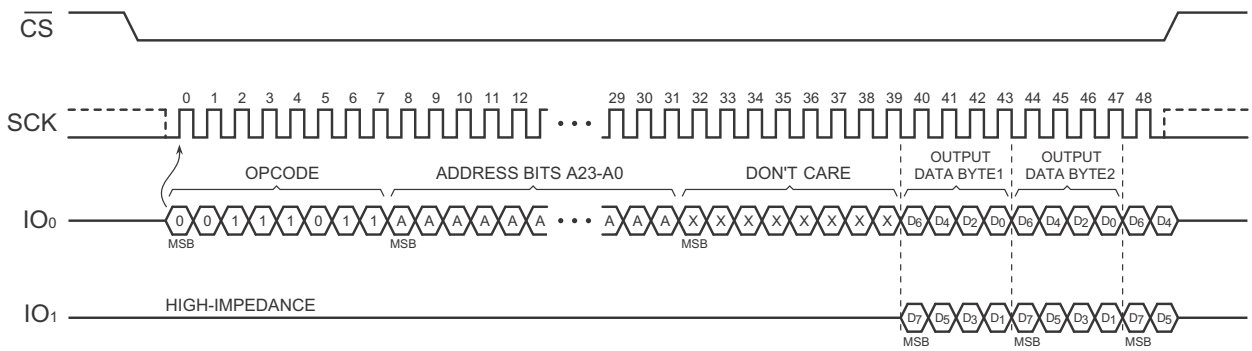

Figure 7. Dual-Output Read Array

© 2025 Renesas Electronics

Downloaded from Arrow.com.

7.3 Dual-I/O Fast Read Array (BBh)

The Dual-I/O Fast Read Array command is similar to the Dual-Output Read Array command and can be used to sequentially read a continuous stream of data from the device by providing the clock pin once the initial starting address with two bits of address on each clock and two bits of data on every clock cycle.

To perform the Dual-I/O Fast Read Array operation, the $\overline{CS}$ pin must first be asserted; then, the opcode BBh must be clocked into the device. After the opcode has been clocked in, the three address bytes must be clocked in to specify the location of the first byte to read within the memory array. Following the three address bytes, a single mode byte also must be clocked into the device.

After the three address bytes and the mode byte have been clocked in, additional clock cycles output data on both the I/O_1 and I/O_0 pins. The data is always output with the MSB of a byte first, and the MSB is always output on the I/O_1 pin. During the first clock cycle, bit seven of the first data byte is output on the I/O_1 pin, while bit six of the same data byte is output on the I/O_0 pin. During the next clock cycle, bits five and four of the first data byte are output on the I/O_1 and I/O_0 pins, respectively. The sequence continues with each byte of data output after every four clock cycles. When the last byte (3FFFFFh) of the memory array has been read, the device continues reading from the beginning of the array (000000h). No delays are incurred when wrapping around from the end of the array to the beginning of the array. Deasserting the $\overline{CS}$ pin terminates the read operation and puts the I/O_1 and I/O_0 pins into a high-impedance state. The $\overline{CS}$ pin can be deasserted at any time and does not require that a full byte of data be read.

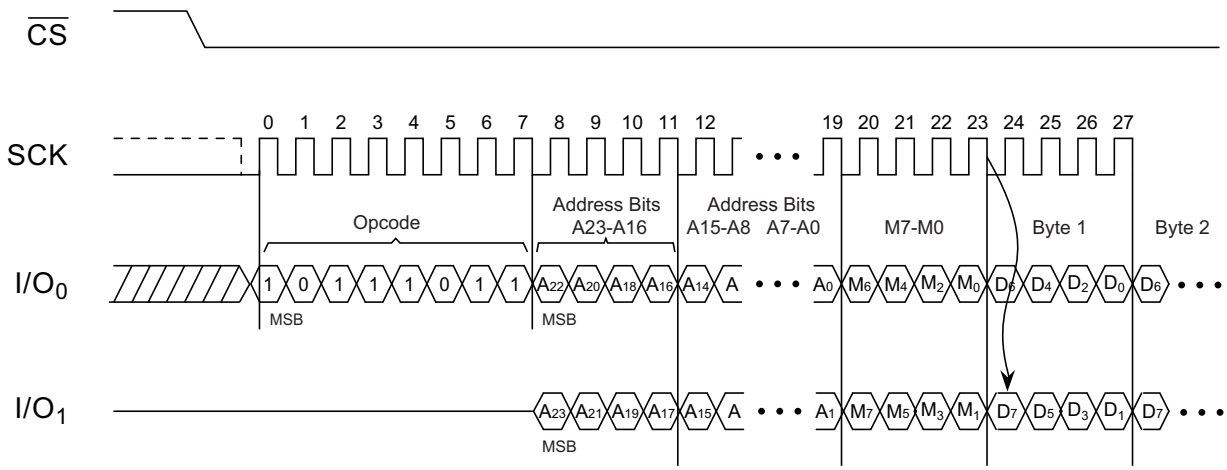

Figure 8. Dual-I/O Fast Read Array (Initial command or previous M5, M4 ≠ 1,0)

© 2025 Renesas Electronics

Downloaded from Arrow.com.

7.3.1 Dual-I/O Fast Read Array (BBh) with Continuous Read Mode

The Fast Read Dual I/O command can further reduce command overhead through setting the Continuous Read Mode bits (M7-0) after the input Address bits (A23-0), as shown in Figure 9. The upper nibble of M7-4 controls the length of the next Fast Read Dual I/O command through the inclusion, or exclusion, of the first byte command code. The lower nibble bits of M3-0 are don't care (x). However, the I/O pins must be high-impedance prior to the falling edge of the first data out clock. If the Continuous Read Mode bits M5-4 = (1,0), the next Fast Read Dual I/O command (after $\overline{CS}$ is raised and then lowered) does not require the BBh command code. This reduces the command sequence by eight clocks and allows the Read address to be immediately entered after $\overline{CS}$ is asserted low. If the Continuous Read Mode bits M5-4 do not equal to (1,0), the next command (after $\overline{CS}$ is raised and then lowered) requires the first byte command code, thus returning to normal operation. A Continuous Read Mode Reset command can also be used to reset M7-0 before issuing normal commands.

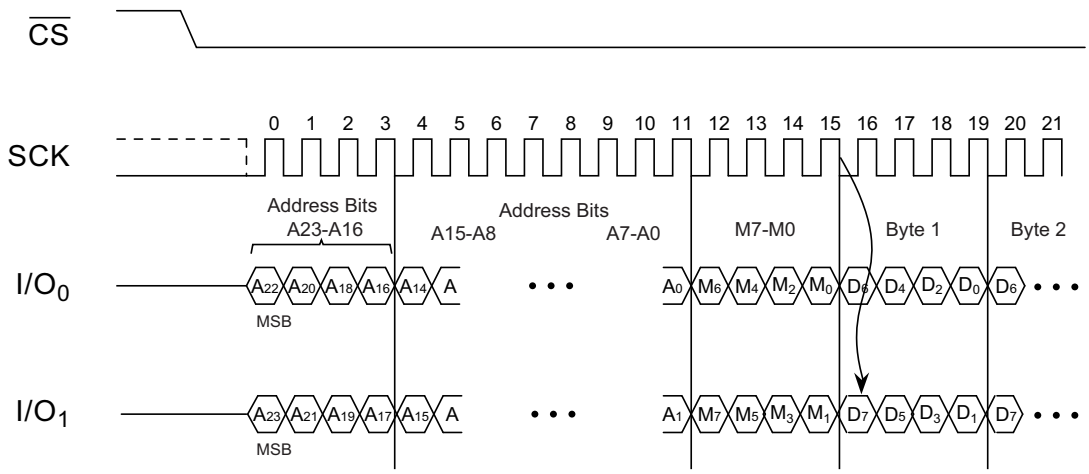

Figure 9. Dual-I/O Fast Read Array (Previous command set M5, M4 = 1,0)

© 2025 Renesas Electronics

Downloaded from Arrow.com.

7.4 Quad Output Fast Read Array (6Bh)

The Quad-Output Fast Read Array command is followed by a three-byte address (A23 - A0) and one dummy byte, each bit being latched in during the rising edge of SCK; then, the memory contents are shifted out four bits per clock cycle from I/O_3, I/O_2, I/O_1, and I/O_0. The first byte addressed can be at any location. The address automatically increments to the next higher address after each byte of data is shifted out.

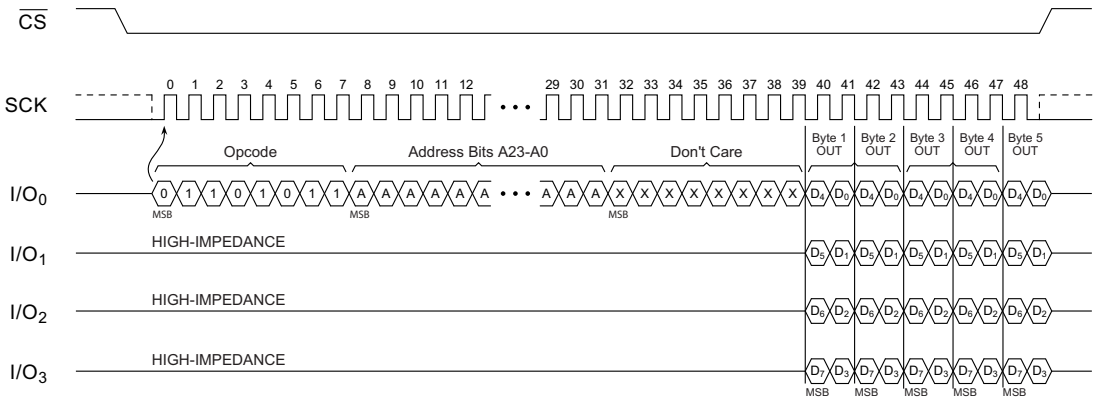

Figure 10. Quad-Output Fast Read Array

© 2025 Renesas Electronics

Downloaded from Arrow.com.

7.5 Quad-I/O Fast Read Array (EBh)

The Quad-I/O Fast Read Array command is similar to the Quad-Output Fast Read Array command. It allows four bits of address to be clocked into the device on every clock cycle, rather than just one.

To perform the Quad-I/O Read Array operation, the $\overline{CS}$ pin must first be asserted; then, the opcode EBh must be clocked into the device. After the opcode has been clocked in, the three address bytes must be clocked in to specify the location of the first byte to read within the memory array. Following the three address bytes, a single mode byte must also be clocked into the device.

After the three address bytes, the mode byte and two dummy bytes have been clocked in, additional clock cycles output data on the I/O_{3-0} pins. The data is output with the MSB of a byte first, and the MSB is output on the I/O_3 pin. During the first clock cycle, bit 7 of the first data byte is output on the I/O_3 pin while bits 6, 5, and 4 of the same data byte are output on the I/O_2, I/O_1 and I/O_0 pins, respectively. During the next clock cycle, bits 3, 2, 1, and 0 of the first data byte are output on the I/O_3, I/O_2, I/O_1 and I/O_0 pins, respectively. The sequence continues with each byte of data being output after every two clock cycles.

When the last byte (3FFFFFh) of the memory array has been read, the device continues reading from the beginning of the array (000000h). No delays are incurred when wrapping around from the end of the array to the beginning of the array. Deasserting the $\overline{CS}$ pin terminates the read operation and puts the I/O_3, I/O_2, I/O_1 and I/O_0 pins into a high-impedance state. The $\overline{CS}$ pin can be deasserted at any time and does not require a full byte of data to be read. The Quad Enable bit (QE) of the Status Register must be set to enable for the Quad-I/O Read Array command.

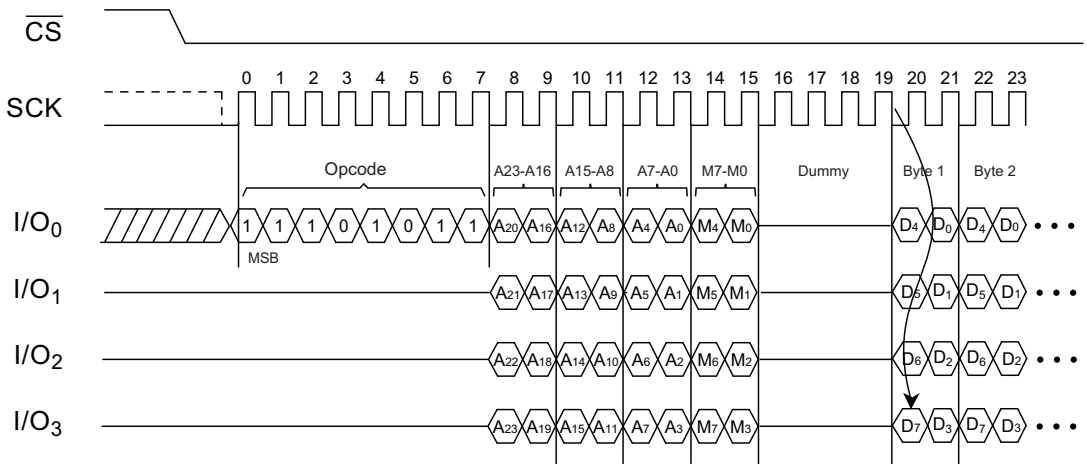

Figure 11. Quad-I/O Read Array (Initial command or previous M5, M4 ≠ 1,0)

© 2025 Renesas Electronics

Downloaded from Arrow.com.

7.5.1 Quad-I/O Fast Read Array (EBh) with Continuous Read Mode

The Fast Read Quad I/O command can further reduce command overhead through setting the Continuous Read Mode bits (M7-0) after the input Address bits (A23-0), as shown in Figure 11. The upper nibble (M7-4) of the Continuous Read Mode bits controls the length of the next Fast Read Quad I/O command through the inclusion, or exclusion, of the first byte command code. The lower nibble bits (M3-0) of the Continuous Read Mode bits are don't care. However, the IO pins must be high-impedance prior to the falling edge of the first data out clock. If the Continuous Read Mode bits M5-4 = (1,0), the next Quad-I/O Read Array command (after $\overline{CS}$ is raised and then lowered) does not require the EBh command code, as shown in Figure 12. This reduces the command sequence by eight clocks and allows the Read address to be immediately entered after $\overline{CS}$ is asserted low. If the *Continuous Read Mode* bits M5-4 do not equal to (1,0), the next command (after $\overline{CS}$ is raised and then lowered) requires the first byte command code, thus returning to normal operation. A Continuous Read Mode Reset command can also be used to reset M7-0 before issuing normal commands.

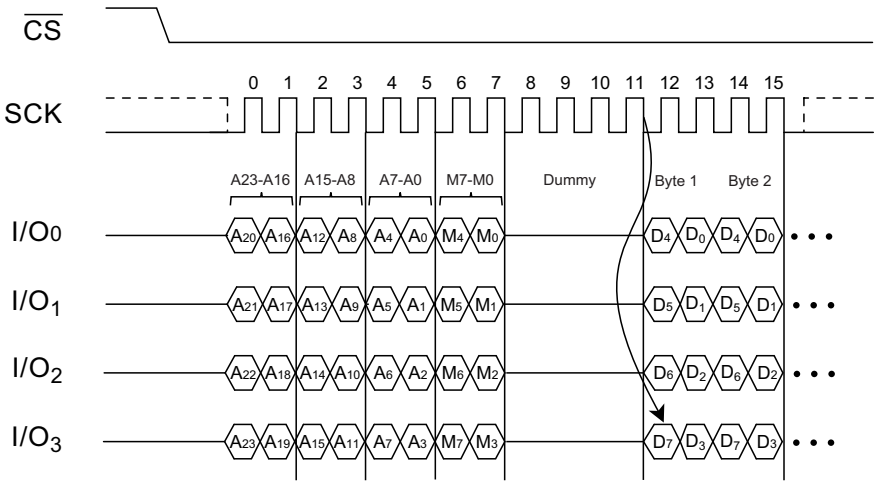

Figure 12. Quad I/O Read Array with Continuous Read Mode (Previous Command Set M5, M4 = 1,0)

© 2025 Renesas Electronics

Downloaded from Arrow.com.

7.5.2 Set Burst with Wrap (77h)

The Set Burst with Wrap command is used in conjunction with the Quad I/O Fast Read and Quad I/O Word Fast Read command to access a fixed length (8-, 16-, 32-, or 64-byte) section within a 256-byte page in standard SPI mode (see Table 5 and Figure 13).

Table 5. Set Burst with Wrap Command Functions

W6, W5	W4 = 0		W4 = 1 (Default)	
	Wrap Around	Wrap Length	Wrap Around	Wrap Length
0 0	Yes	8 bytes	No	N/A
0 1	Yes	16 bytes	No	N/A
1 0	Yes	32 bytes	No	N/A
1 1	Yes	64 bytes	No	N/A

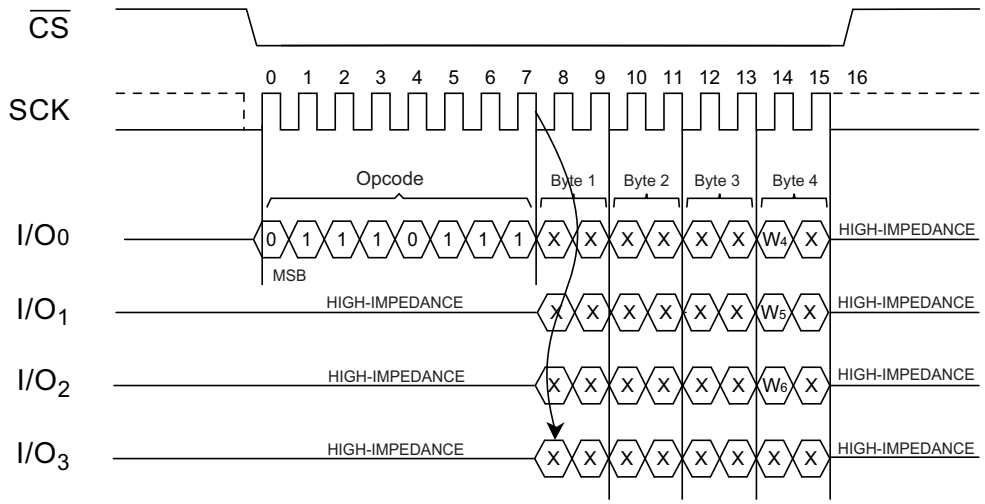

Figure 13. Set Burst with Wrap Timing (SPI Mode)

The Set Burst with Wrap command sequence is: $\overline{CS}$ goes low → Send Set Burst with Wrap command → Send 24 Dummy bits → Send 8 Wrap bits → $\overline{CS}$ goes high.

If W6-4 is set by a Set Burst with Wrap command, all the following Fast Read Quad I/O and Word Read Quad I/O commands use the W6-4 setting to access the 8-, 16-, 32-, or 64-byte section within any page. To exit the Wrap Around function and return to normal read operation, issue another Set Burst with Wrap command to set W4=1. The default value of W4 at power-on is 1.

© 2025 Renesas Electronics

Downloaded from Arrow.com.

7.6 Quad-I/O Word Fast Read (E7h)

The Quad I/O Word Fast Read command is similar to the Quad Fast Read command, except that the lowest address bit (A0) must equal 0 and have two dummy clock cycles. Figure 14 shows the command sequence; the first byte addressed can be at any location. The address is automatically incremented to the next higher address after each byte of data is shifted out. The Quad Enable bit (QE) of the Status Register (S9) must be set to enable.

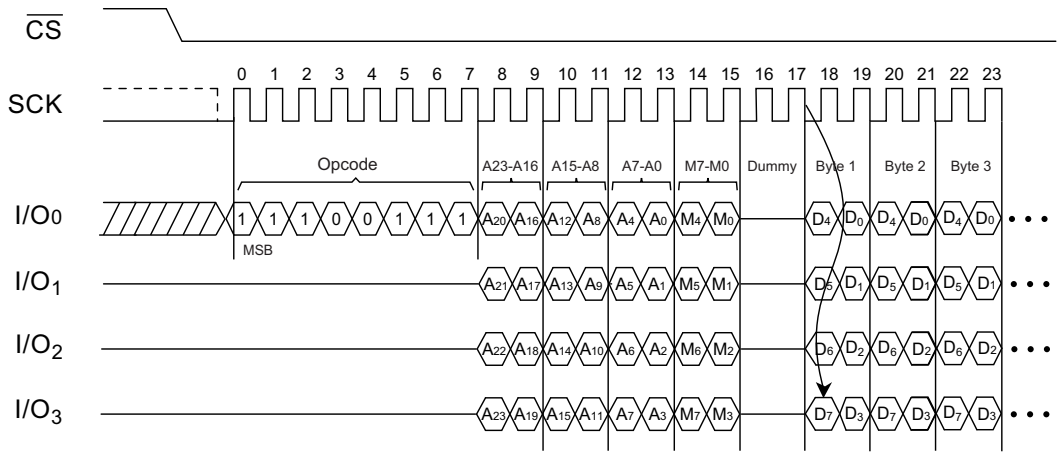

Figure 14. Quad I/O Word Fast Read Timing (Initial Command Set M5, M4 ≠ 1,0) SPI Mode

7.6.1 Quad I/O Word Fast Read with Continuous Read Mode

The Quad I/O Word Fast Read command can further reduce command overhead by setting the Continuous Read Mode bits (M7-0) after input of the Address bits (A23-0). If the Continuous Read Mode bits (M5-4) = (1, 0), the next Quad I/O Fast Read command (after $\overline{CS}$ is raised and then lowered) does not require the E7h command code. Figure 15 shows the command sequence. If the Continuous Read Mode bits M5-4 do not equal to (1,0), the next command requires the first E7h command code, thus returning to normal operation. A Continuous Read Mode Reset command also can be used to reset (M5-4) before issuing normal command.

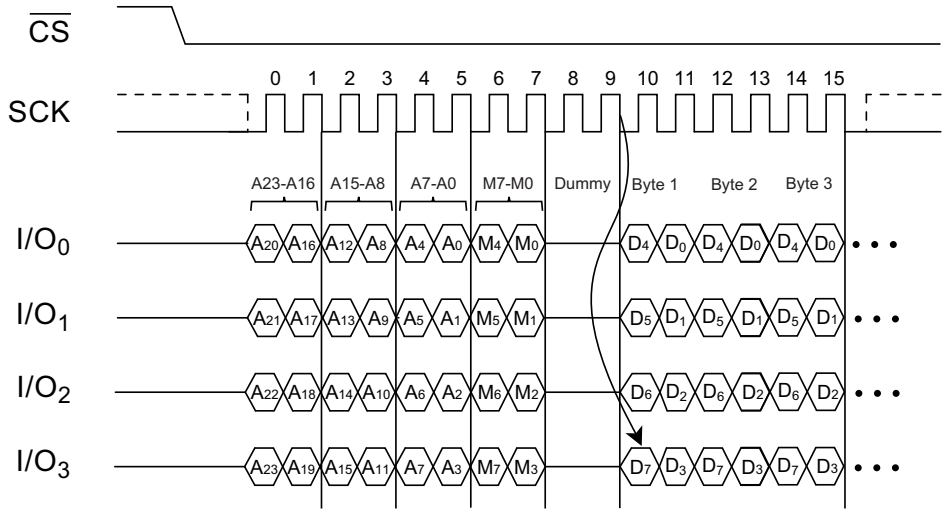

Figure 15. Quad I/O Word Fast Read Timing (Previous Command Set M5, M4 = 1,0) SPI Mode

© 2025 Renesas Electronics

Downloaded from Arrow.com.

7.6.2 Quad I/O Word Fast Read with 8-, 16-, 32-, 64-Byte Wrap Around in Standard SPI Mode

The Quad I/O Fast Read command also can be used to access a specific portion within a page by issuing a Set Burst with Wrap (77h) command prior to E7h. The Set Burst with Wrap (77h) command can enable or disable the Wrap Around feature for the following E7h commands. When enabled, the data accessed can be limited to an 8-, 16-, 32-, or 64-byte section of a 256-byte page. The output data starts at the initial address specified in the command when it reaches the ending boundary of the 8-, 16-, 32-, or 64-byte section. The output wraps around to the beginning boundary automatically until $\overline{CS}$ is pulled high to terminate the command.

The Burst with Wrap feature allows applications that use cache to quickly fetch a critical address and then fill the cache afterwards within a fixed length (8-, 16-, 32-, or 64-bytes) of data without issuing multiple read commands.

The Set Burst with Wrap command allows three Wrap Bits (W6-4) to be set. W4 enables or disables the wrap around operation; W5 specifies the length of the wrap around section within a page.

7.7 Read Serial Flash Discoverable Parameter (5Ah)

The Serial Flash Discoverable Parameter (SFDP) standard provides a consistent method of describing the functional and feature capabilities of serial Flash devices in a standard set of internal parameter tables. These parameter tables can be interrogated by host system software to enable adjustments needed to accommodate divergent features from multiple vendors. SFDP is a JEDEC Standard, JESD216D. For more detailed SFDP values, contact Renesas Electronics.

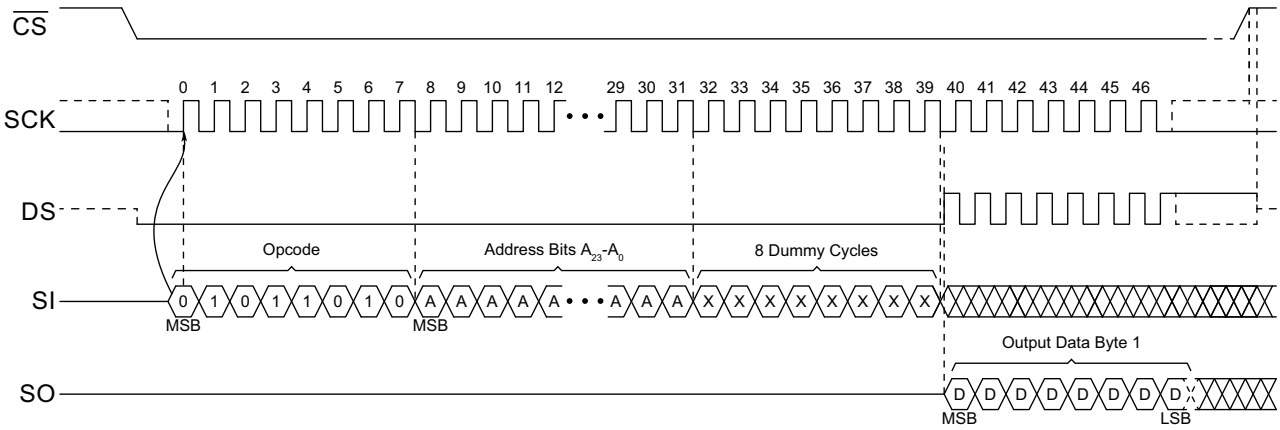

Figure 16. Read Serial Flash Discoverable Parameter Command Sequence Diagram

© 2025 Renesas Electronics

Downloaded from Arrow.com.

8. Program and Erase Commands

8.1 Byte/Page Program (02h)

The Byte/Page Program command allows one to 256 bytes of data to be programmed into previously erased memory locations. An erased memory location is one that has all eight bits set to the logical 1 state (a byte value of FFh). Before a Byte/Page Program command can be started, the Write Enable command must have been issued to the device (see Section 9.1) to set the Write Enable Latch (WEL) bit of the Status Register to a logical 1 state.

To perform a Byte/Page Program command, an opcode of 02h must be clocked into the device, followed by the three address bytes denoting the first byte location of the memory array to begin programming at. After the address bytes have been clocked in, data can then be clocked into the device and is stored in an internal buffer.

If the starting memory address denoted by A23-A0 does not fall on an even 256-byte page boundary (A7-A0 are not all 0), special circumstances regarding which memory locations to be programmed apply. In this situation, any data that is sent to the device that goes beyond the end of the page wraps around back to the beginning of the same page. For example, if the starting address denoted by A23-A0 is 0000FEh, and three bytes of data are sent to the device, then the first two bytes of data are programmed at addresses 0000FEh and 0000FFh, and the last byte of data is programmed at address 000000h. The remaining bytes in the page (addresses 000001h through 0000FDh) are not programmed and remain in the erased state (FFh). Also, if more than 256 bytes of data are sent to the device, only the last 256 bytes sent are latched into the internal buffer.

When the $\overline{CS}$ pin is deasserted, the device takes the data stored in the internal buffer and programs it into the appropriate memory array locations based on the starting address specified by A23-A0 and the number of data bytes sent to the device. If fewer than 256 bytes of data were sent to the device, the remaining bytes within the page are not programmed and remain in the erased state (FFh). The programming of the data bytes is internally self-timed and, if only programming a single byte, must take place in a time of t_{PP} or t_{BP}.

The three address bytes and at least one complete data byte must be clocked into the device before the $\overline{CS}$ pin is deasserted, and the $\overline{CS}$ pin must be deasserted on even byte boundaries (multiples of eight bits); otherwise, the device aborts the operation and no data is programmed into the memory array. Also, if the memory is in the protected state, the Byte/Page Program command is not executed, and the device returns to the idle state once the $\overline{CS}$ pin has been deasserted. The WEL bit in the Status Register is reset to the logical 0 state if: the program cycle aborts due to an incomplete address being sent, an incomplete byte of data is sent, the $\overline{CS}$ pin is deasserted on uneven byte boundaries, or the memory location to be programmed is protected.

While the device is programming, the Status Register can be read and indicates that the device is busy. For faster throughput, it is recommended that the Status Register be polled, rather than waiting the t_{BP} or t_{PP} time to determine if the data bytes have finished programming. At some point before the program cycle completes, the WEL bit in the Status Register is reset to the logical 0 state.

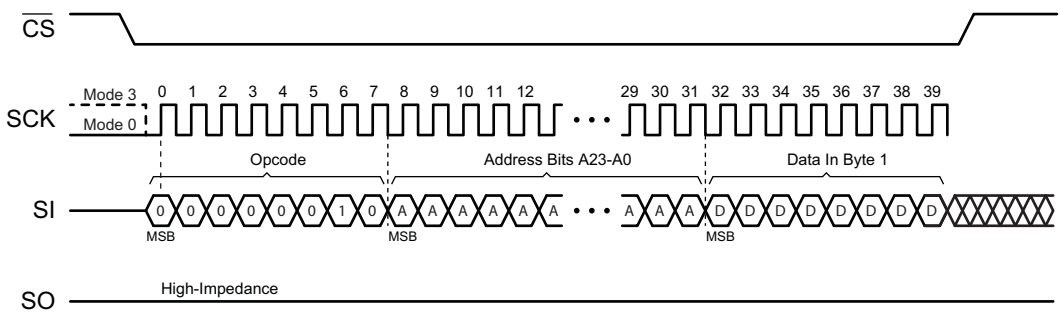

Figure 17. Byte Program

© 2025 Renesas Electronics

Downloaded from Arrow.com.

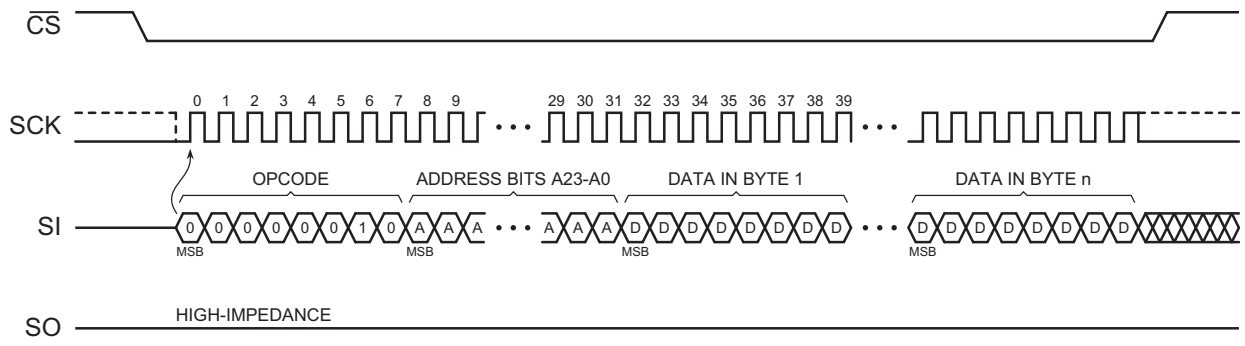

Figure 18. Page Program

8.2 Quad Page Program (32h)

This command is for programming the memory using pins: IO_0, IO_1, IO_2, and IO_3. To use this command, the Quad enable (bit 9 in Status Register) must be set (QE=1). A Write Enable command must previously have been executed to set the Write Enable Latch bit before sending the Page Program command. The Quad Page Program command is entered by driving $\overline{CS}$ low, followed by the command code (32h), three address bytes, and at least one data byte on I/O pins.

Figure 19 shows the command sequence. If more than 256 bytes are sent to the device, previously latched data are discarded, and the last 256 data bytes are guaranteed to be programmed correctly within the same page. If fewer than 256 data bytes are sent to device, they are correctly programmed at the requested addresses without affecting other bytes of the same page. $\overline{CS}$ must be driven high after the eighth bit of the last data byte has been latched in; otherwise, the Quad Page Program command is not executed.

As soon as $\overline{CS}$ is driven high, the self-timed Quad Page Program cycle (whose duration is t_{PP}) is initiated. While the Quad Page Program cycle is in progress, the Status Register can be read to check the value of the RDY/BSY bit. The RDY/BSY bit is 1 during the self-timed Quad Page Program cycle; it is 0 when done. At some unspecified time before the cycle is completed, the Write Enable Latch bit is reset. A Quad Page Program command applied to a page which is protected by the Block Protect (BP4, BP3, BP2, BP1, BP0) bits (see Table 6 and Table 7) is not executed.

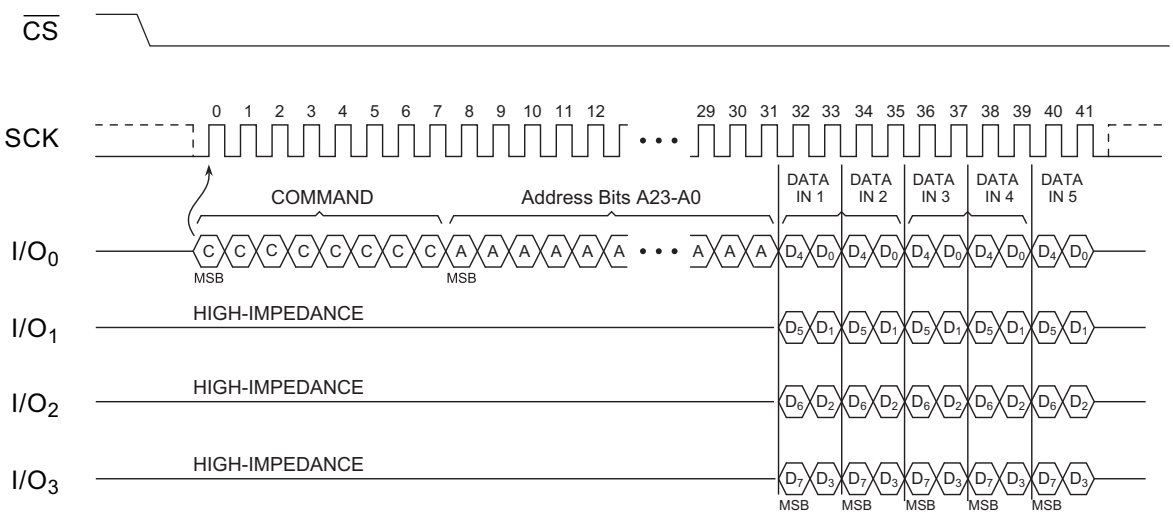

Figure 19. Quad Page Program (32h) Timing

© 2025 Renesas Electronics

Downloaded from Arrow.com.

8.3 Block Erase (20h, 52h, or D8h)

A block of 4, 32, or 64 kBytes can be erased (all bits set to the logical 1 state) in a single operation by using one of three different opcodes for the Block Erase command. An opcode of 20h is used for a 4-kBytes erase, an opcode of 52h is used for a 32-kBytes erase, and D8h is used for a 64-kBytes erase. Before a Block Erase command can be started, the Write Enable command must have been previously issued to the device to set the WEL bit of the Status Register to a logical 1 state.

To perform a Block Erase, the $\overline{CS}$ pin must first be asserted and the appropriate opcode (20h, 52h, or D8h) must be clocked into the device. After the opcode has been clocked in, the three address bytes specifying an address within the 4- or 32- or 64-kBytes block to be erased must be clocked in. Any additional data clocked into the device is ignored. When the $\overline{CS}$ pin is deasserted, the device erases the appropriate block. The erasing of the block is internally self-timed and takes place in a time of t_{BLKE}.

Since the Block Erase command erases a region of bytes, the lower order address bits do not need to be decoded by the device. Therefore, for a 4-kBytes erase, address bits A11-A0 are ignored by the device, and their values can be either a logical 1 or 0. For a 32-kBytes erase, address bits A14-A0 are ignored by the device. For a 64-kBytes erase, address bits A15-A0 are ignored by the device. Despite the lower-order address bits not being decoded by the device, the complete three address bytes must still be clocked into the device before the $\overline{CS}$ pin is deasserted, and the $\overline{CS}$ pin must be deasserted on a byte boundary (multiples of eight bits); otherwise, the device aborts the operation, and no erase operation is performed.

If the memory is in the protected state, the Block Erase command is not executed, and the device returns to the idle state once the $\overline{CS}$ pin has been deasserted.

The WEL bit in the Status Register is reset to the logical 0 state if: the erase cycle aborts due to an incomplete address being sent, the $\overline{CS}$ pin is deasserted on uneven byte boundaries, or because a memory location within the region to be erased is protected.

While the device is executing a successful erase cycle, the Status Register can be read and indicates that the device is busy. For faster throughput, it is recommended that the Status Register be polled to determine if the device has finished erasing. At some point before the erase cycle completes, the WEL bit in the Status Register is reset to the logical 0 state.

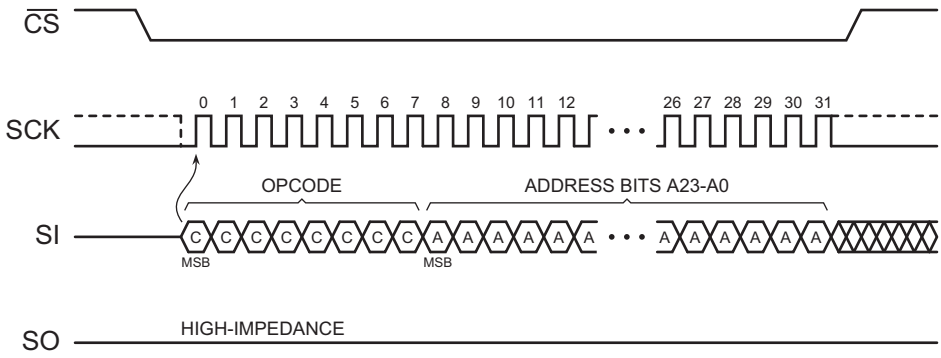

Figure 20. Block Erase Timing

© 2025 Renesas Electronics

Downloaded from Arrow.com.

8.4 Chip Erase (60h or C7h)

The entire memory array can be erased in a single operation by using the Chip Erase command. Before a Chip Erase command can be started, the Write Enable command must have been previously issued to the device to set the WEL bit of the Status Register to a logical 1 state.

Two opcodes (60h and C7h) can be used for the Chip Erase command. There is no difference in device functionality when using the two opcodes; thus, they can be used interchangeably. To perform a Chip Erase, one of the two opcodes must be clocked into the device. Since the entire memory array is to be erased, no address bytes need to be clocked into the device, and any data clocked in after the opcode is ignored. When the $\overline{CS}$ pin is deasserted, the device erases the entire memory array. The erasing of the device is internally self-timed and takes place in a time of t_{CHPE}.

The complete opcode must be clocked into the device before the $\overline{CS}$ pin is deasserted, and the $\overline{CS}$ pin must be deasserted on an byte boundary (multiples of eight bits); otherwise, no erase is performed. Also, if the memory array is in the protected state, the Chip Erase command is not executed, and the device returns to the idle state once the $\overline{CS}$ pin has been deasserted. The WEL bit in the Status Register is reset to the logical 0 state if the $\overline{CS}$ pin is deasserted on uneven byte boundaries, or if the memory is in the protected state.

While the device is executing a successful erase cycle, the Status Register can be read and indicates that the device is busy. For faster throughput, it is recommended that the Status Register be polled to determine if the device has finished erasing. At some point before the erase cycle completes, the WEL bit in the Status Register is reset to the logical 0 state.

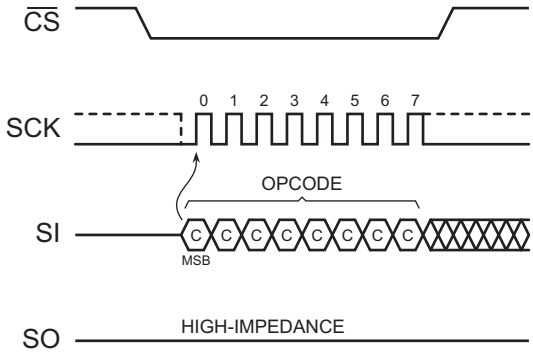

Figure 21. Chip Erase Timing

© 2025 Renesas Electronics

Downloaded from Arrow.com.

8.5 Program/Erase Suspend (75h)

The Program/Erase Suspend command allows an in-progress program or erase operation to be suspended so that other device operations can be performed. For example, by suspending an erase operation to a particular block, the system can perform functions such as a program or read to a different block.

Chip Erase cannot be suspended. The Program/Erase Suspend command is ignored if it is issued during a Chip Erase.A program operation can be performed while an erase operation is suspended, but the program operation cannot be suspended while an erase operation is currently suspended.

Other device operations, such as a Read Status Register, can also be performed while a program or erase operation is suspended.

Since the need to suspend a program or erase operation is immediate, the Write Enable command does not need to be issued prior to the Program/Erase Suspend command being issued. Thus, the Program/Erase Suspend command operates independently of the state of the WEL bit in the Status Register.

To perform a Program/Erase Suspend, the $\overline{CS}$ pin must first be asserted, and the 75h opcode must be clocked into the device. No address bytes need to be clocked into the device, and any data clocked in after the opcode is ignored. When the $\overline{CS}$ pin is deasserted, the program or erase operation currently in progress is suspended. The Suspend (E_SUS or P_SUS) bits in the Write Status Register are set to the logical 1 state to indicate that the program or erase operation has been suspended. Also, the $\overline{RDY}$/BSY bit in the Status Register indicates that the device is ready for another operation. The complete opcode must be clocked into the device before the $\overline{CS}$ pin is deasserted, and the $\overline{CS}$ pin must be deasserted on a byte boundary (multiples of eight bits); otherwise, no suspend operation is performed.

A program operation is not allowed to a block that has been erase suspended. If a program operation is attempted to an erase suspended block, then the program operation aborts, and the WEL bit in the Status Register is reset to a logical 0 state. Likewise, an erase operation is not allowed to a block that included the page that has been program suspended. If attempted, the erase operation aborts, and the WEL bit in the Status Register is reset to a logical 0 state.

If an attempt is made to perform an operation that is not allowed during a program or erase suspend, such as a Write Status Register operation, the device ignores the opcode, and no operation is performed. The state of the WEL bit in the Status Register is not affected.

Note: Repeated suspend/resume sequences might significantly impact progress of the erase or program operation. To ensure timely completion of the erase or program operation, limit the number of suspend/resume sequences during the same erase or program operation; alternatively, provide sufficient time (up to 3.5 ms for a 4 kB erase; up to 55 ms for a 64 kB erase) after a resume operation to allow the erase or program operation to complete.

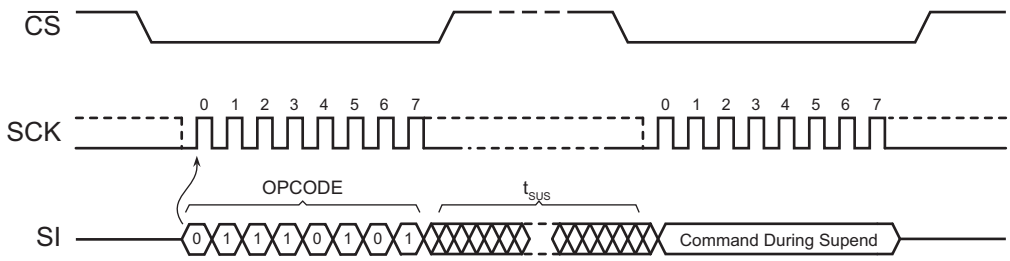

Figure 22. Erase/Program Suspend Timing

Note: See application note AN500 for operational guidance on implementing suspend and resume operations.

© 2025 Renesas Electronics

Downloaded from Arrow.com.

8.6 Program/Erase Resume (7Ah)

The Program/Erase Resume command allows a suspended program or erase operation to be resumed and continue programming a Flash page or erasing a Flash memory block where it left off. The Program/Erase Resume command is accepted by the device only if the E_SUS or P_SUS bit in the Write Status Register is 1, and the $\overline{\text{RDY}}$/BSY bit is 0. If the E_SUS and P_SUS bits are 0, or the $\overline{\text{RDY}}$/BSY bit is 1, the Program/Erase Resume command is ignored by the device. As with the Program/Erase Suspend command, the Write Enable command does not need to be issued before to the Program/Erase Resume command is issued. Thus, the Program/Erase Resume command operates independently of the state of the WEL bit in the Status Register.

To perform Program/Erase Resume, the $\overline{\text{CS}}$ pin must first be asserted, and opcode 7Ah must be clocked into the device.

No address bytes need to be clocked into the device, and any data clocked in after the opcode is ignored. When the $\overline{\text{CS}}$ pin is deasserted, the program or erase operation currently suspended resumes. The E_SUS or P_SUS bit in the Status Register is reset back to the logical 0 state to indicate the program or erase operation is no longer suspended. Also, the $\overline{\text{RDY}}$/BSY bit in the Status Register indicates that the device is busy performing a program or erase operation. The complete opcode must be clocked into the device before the $\overline{\text{CS}}$ pin is deasserted, and the $\overline{\text{CS}}$ pin must be deasserted on a byte boundary (multiples of eight bits); otherwise, no resume operation is performed.

During a simultaneous Erase Suspend/Program Suspend condition, issuing the Program/Erase Resume command results in the program operation resuming first. After the program operation has been completed, the Program/Erase Resume command must be issued again for the erase operation to be resumed.

While the device is busy resuming a program or erase operation, any attempts at issuing the Program/Erase Suspend command are ignored. Thus, if a resumed program or erase operation needs to be subsequently suspended again, the system must either wait before issuing the Program/Erase Suspend command, or it must check the status of the $\overline{\text{RDY}}$/BSY bit or the E_SUS or P_SUS bit in the Status Register to determine if the previously suspended program or erase operation has resumed.

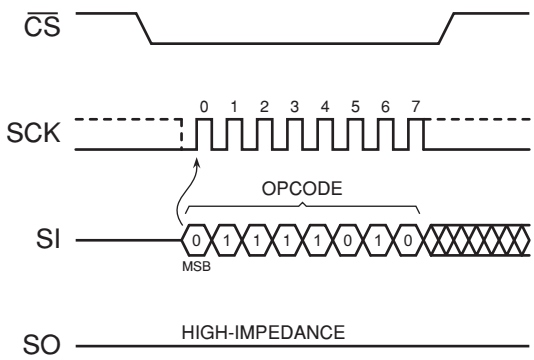

Figure 23. Erase/Program Resume Command Timing

© 2025 Renesas Electronics

Downloaded from Arrow.com.

9. Protection Commands and Features

9.1 Write Enable (06h)

The Write Enable command sets the Write Enable Latch (WEL) bit in the Status Register to a logical 1 state. The WEL bit must be set before a Byte/Page Program, Erase, Program Security Register Pages, Erase Security Register Pages or Write Status Register command can be executed. This makes the issuance of these commands a two step process, thus reducing the chances of a command being accidentally or erroneously executed. If the WEL bit in the Status Register is not set prior to the issuance of one of these commands, the command is not executed.

To issue the Write Enable command, the $\overline{CS}$ pin must first be asserted, and the opcode of 06h must be clocked into the device. No address bytes need to be clocked into the device, and any data clocked in after the opcode is ignored. When the $\overline{CS}$ pin is deasserted, the WEL bit in the Status Register is set to a logical 1. The complete opcode must be clocked into the device before the $\overline{CS}$ pin is deasserted, and the $\overline{CS}$ pin must be deasserted on an byte boundary (multiples of eight bits); otherwise, the device aborts the operation, and the WEL bit state does not change.

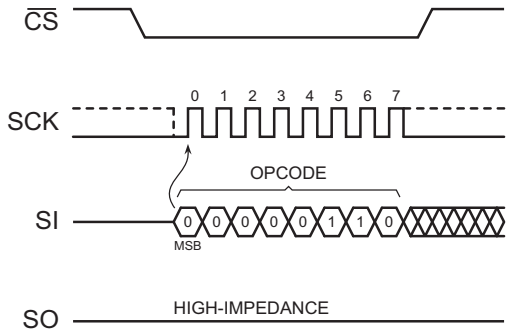

Figure 24. Write Enable Timing

9.2 Write Disable (04h)

The Write Disable command resets the Write Enable Latch (WEL) bit in the Status Register to the logical 0 state. With the WEL bit reset, all Byte/Page Program, Erase, Program Security Register Page, and Write Status Register commands are not executed. Other conditions can also cause the WEL bit to be reset; for more details, see the WEL bit section of the Status Register description (Section 9.1).

To issue this command, the $\overline{CS}$ pin must be asserted first, and the opcode of 04h must be clocked into the device. No address bytes need to be clocked into the device, and any data clocked in after the opcode is ignored. When the $\overline{CS}$ pin is deasserted, the WEL bit in the Status Register is reset to a logical 0. The complete opcode must be clocked into the device before the $\overline{CS}$ pin is deasserted, and the $\overline{CS}$ pin must be deasserted on an byte boundary (multiples of eight bits); otherwise, the device aborts the operation, and the WEL bit state does not change.

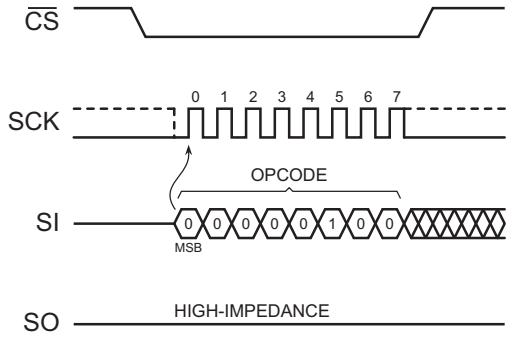

Figure 25. Write Disable Timing

© 2025 Renesas Electronics

Downloaded from Arrow.com.

9.3 Non-Volatile Protection

The device can be software-protected against erroneous or malicious program or erase operations by using the Non-Volatile Protection feature. Non-Volatile Protection can be enabled or disabled by using the Write Status Register command to change the value of the Protection (CMP, BP4, BP3, BP2, BP1, BP0) bits in the Status Register. Table 6 outlines the states of the Protection bits and the associated protection area.

Table 6. Memory Array with CMP = 0

Protection Bits					Memory Content	
BP4	**BP3**	**BP2**	**BP1**	**BP0**	**Address Range**	**Portion**
X	X	0	0	0	None	None
0	0	0	0	1	3F0000h-3FFFFFh	Upper 1/64
0	0	0	1	0	3E0000h-3FFFFFh	Upper 1/32
0	0	0	1	1	3C0000h-3FFFFFh	Upper 1/16
0	0	1	0	0	380000h-3FFFFFh	Upper 1/8
0	0	1	0	1	300000h-3FFFFFh	Upper 1/4
0	0	1	1	0	200000h-3FFFFFh	Upper 1/2
0	1	0	0	1	000000h-00FFFFh	Lower 1/64
0	1	0	1	0	000000h-01FFFFh	Lower 1/32
0	1	0	1	1	000000h-03FFFFh	Lower 1/16
0	1	1	0	0	000000h-07FFFFh	Lower 1/8
0	1	1	0	1	000000h-0FFFFFh	Lower 1/4
0	1	1	1	0	000000h-1FFFFFh	Lower 1/2
X	X	1	1	1	000000h-3FFFFFh	ALL
1	0	0	0	1	3FF000h-3FFFFFh	Upper 1/512
1	0	0	1	0	3FE000h-3FFFFFh	Upper 1/256
1	0	0	1	1	3FC000h-3FFFFFh	Upper 1/128
1	0	1	0	X	3F8000h-3FFFFFh	Upper 1/64
1	0	1	1	0	3F8000h-3FFFFFh	Upper 1/64
1	1	0	0	1	000000h-000FFFh	Lower 1/512
1	1	0	1	0	000000h-001FFFh	Lower 1/256
1	1	0	1	1	000000h-003FFFh	Lower 1/128
1	1	1	0	X	000000h-007FFFh	Lower 1/64
1	1	1	1	0	000000h-007FFFh	Lower 1/64

© 2025 Renesas Electronics

Downloaded from Arrow.com.

Table 7. Memory Array Protection with CMP = 1

Protection Bits					Memory Content	
BP4	BP3	BP2	BP1	BP0	Address Range	Portion
X	X	0	0	0	000000h-3FFFFFh	All
0	0	0	0	1	000000h-3EFFFFh	Lower 63/64
0	0	0	1	0	000000h-3DFFFFh	Lower 31/32
0	0	0	1	1	000000h-3BFFFFh	Lower 15/16
0	0	1	0	0	000000h-37FFFFh	Lower 7/8
0	0	1	0	1	000000h-2FFFFFh	Lower 3/4
0	0	1	1	0	000000h-1FFFFFh	Lower 1/2
0	1	0	0	1	010000h-3FFFFFh	Upper 63/64
0	1	0	1	0	020000h-3FFFFFh	Upper 31/32
0	1	0	1	1	040000h-3FFFFFh	Upper 15/16
0	1	1	0	0	080000h-3FFFFFh	Upper 7/8
0	1	1	0	1	100000h-3FFFFFh	Upper 3/4
0	1	1	1	0	200000h-3FFFFFh	Upper 1/2
X	X	1	1	1	NONE	NONE
1	0	0	0	1	000000h-3FEFFFh	Lower 1023/1024
1	0	0	1	0	000000h-3FDFFFh	Lower 511/512
1	0	0	1	1	000000h-3FBFFFh	Lower 255/256
1	0	1	0	X	000000h-3F7FFFh	Lower 127/128
1	0	1	1	0	000000h-3F7FFFh	Lower 127/128
1	1	0	0	1	001000h-3FFFFFh	Upper 1023/1024
1	1	0	1	0	002000h-3FFFFFh	Upper 511/512
1	1	0	1	1	004000h-3FFFFFh	Upper 255/256
1	1	1	0	X	008000h-3FFFFFh	Upper 127/128
1	1	1	1	0	008000h-3FFFFFh	Upper 127/128

As a safeguard against accidental or erroneous protecting or unprotecting of the memory array, the Protection can be locked from updates by using the $\overline{WP}$ pin (see Section 9.4, for more details).

9.4 Protected States and the Write Protect Pin

The $\overline{WP}$ pin is not linked to the memory array itself and has no direct effect on the protection status of the memory array. Instead, the $\overline{WP}$ pin, controls the hardware locking mechanism of the device.

If the $\overline{WP}$ pin is permanently connected to GND, then the protection bits cannot be changed.

© 2025 Renesas Electronics

Downloaded from Arrow.com.

9.5 Enable Reset (66h) and Reset Device (99h)

Because of the small package and the limitation on the number of pins, the AT25SF161B provides a software Reset command instead of a dedicated RESET pin. Once the software Reset command is accepted, any on-going internal operations are terminated, and the device returns to its default power-on state and loses all the current volatile settings, including the Volatile Status Register bits, Write Enable Latch (WEL) status, Program/Erase Suspend status, Continuous Read Mode bit setting (M7-M0), and Wrap Bit setting (W6-W4).

To avoid accidental reset, the Enable Reset and Reset Device commands must be issued in sequence. Any other commands other than Reset (99h) after the Enable Reset command (66h) disables the Reset Enable state. A new sequence of Enable Reset and Reset Device is needed to reset the device. Once the Reset command is accepted by the device, the device takes approximately 30 µs to reset. During this period, no command is accepted.

The Enable Reset and Reset Device command sequence are shown in Figure 26.

Data corruption can happen if there is an on-going or suspended internal Erase or Program operation when the Reset command sequence is accepted by the device. Check the BUSY bit and the E_SUS and P_SUS bits in the Status Register before issuing the Reset command sequence.

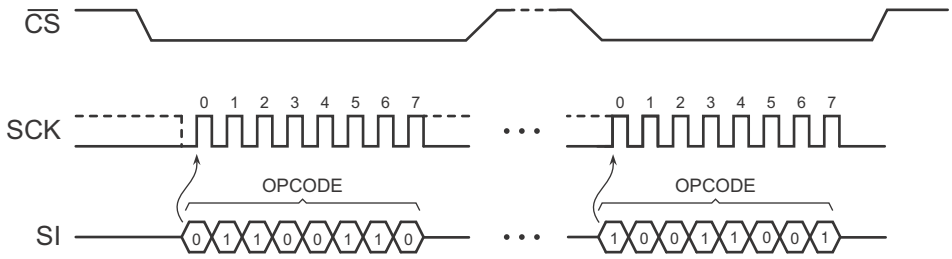

Figure 26. Enable Reset (66h) and Reset Device (99h) Command Timing (SPI Mode)

© 2025 Renesas Electronics

Downloaded from Arrow.com.

10. Security Register Commands

The device contains three extra Security Registers pages, that can be used for unique device serialization, system-level Electronic Serial Number (ESN) storage, locked key storage, etc. The Security Registers are independent of the main Flash memory.

Each page of the Security Register can be erased and programmed independently. Each page can also be independently locked to prevent further changes.

10.1 Read Unique ID Number (4Bh)

The Read Unique ID Number command accesses a factory-set, read-only 64-bit number that is unique to each AT25SF321B device. The ID number can be used in conjunction with user software methods to help prevent copying or cloning of a system. The Read Unique ID command is initiated by driving the $\overline{CS}$ pin low and shifting the command code 4Bh, followed by four dummy byte clock cycles. After this, the 64-bit ID is shifted out on the falling edge of SCK, as shown in Figure 27.

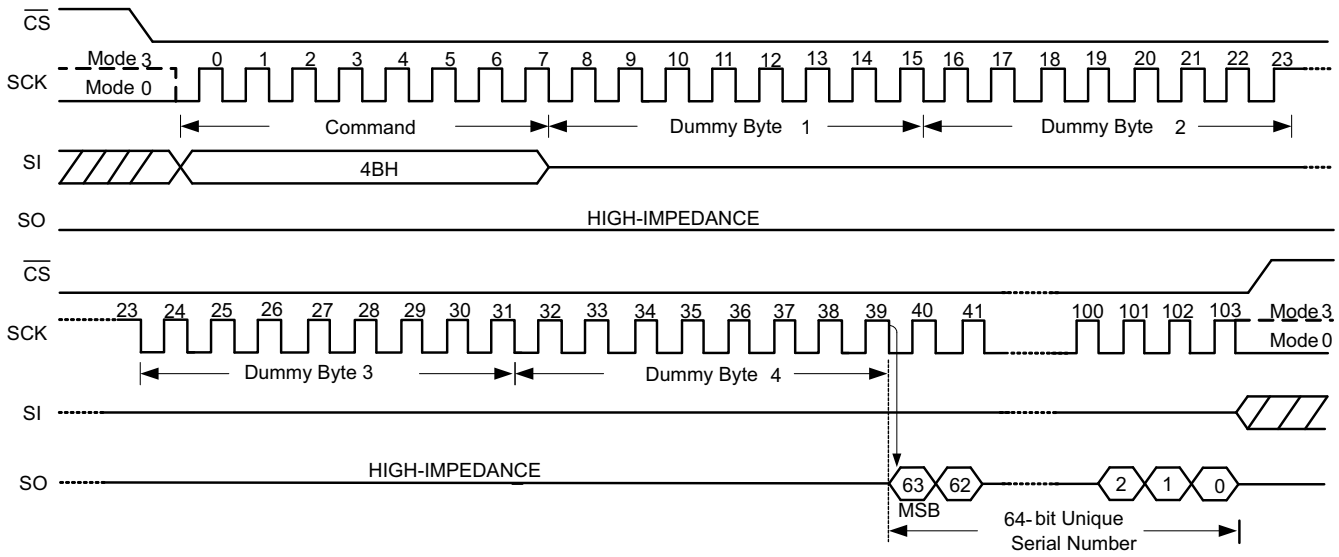

Figure 27. Read Unique ID Timing (SPI Mode)

© 2025 Renesas Electronics

Downloaded from Arrow.com.

10.2 Erase Security Registers (44h)

Before an erase Security Register Page command can be started, the Write Enable command must have been previously issued to the device to set the WEL bit of the Status Register to a logical 1 state.

To perform an Erase Security Register Page command, the $\overline{CS}$ pin must be asserted first, and the opcode 44h must be clocked into the device. After the opcode has been clocked in, the three address bytes specifying the Security Register Page to be erased must be clocked in. When the $\overline{CS}$ pin is deasserted, the device erases the appropriate page. The erasing of the page is internally self-timed and takes place in a time of t_{PP}.

Since the Erase Security Register Page command erases a region of bytes, the lower-order address bits do not need to be decoded by the device. Thus, address bits A7-A0 are ignored by the device. Despite the lower-order address bits not being decoded by the device, the complete three address bytes must be clocked into the device before the $\overline{CS}$ pin is deasserted, and the $\overline{CS}$ pin must be deasserted right after the last address bit (A0); otherwise, the device aborts the operation, and no erase operation is performed.

While the device is executing a successful erase cycle, the Status Register can be read and indicates that the device is busy. For faster throughput, it is recommended that the Status Register be polled (rather than waiting the t_{PP} time to determine if the device has finished erasing). At some point before the erase cycle completes, the $\overline{RDY}$/BSY bit in the Status Register is reset to the logical 0 state.

The WEL bit in the Status Register is reset to the logical 0 state if: the erase cycle aborts due to an incomplete address being sent, the $\overline{CS}$ pin being deasserted on uneven byte boundaries, or because a memory location within the region to be erased is protected.

The Security Registers Lock Bits (LB3-LB1) in the Status Register can be used to OTP protect the security registers. Once a Lock Bit is set to 1, the corresponding Security Register is permanently locked. The Erase Security Register Page command is ignored for Security Registers with their Lock Bit set.

Table 8. Security Register Addresses for Erase Security Register Page Command

Address	A23-A16	A15-A12	A11-A8	A7-A0
Security Register 1	00h	1h	0h	Don't Care
Security Register 2	00h	2h	0h	Don't Care
Security Register 3	00h	3h	0h	Don't Care

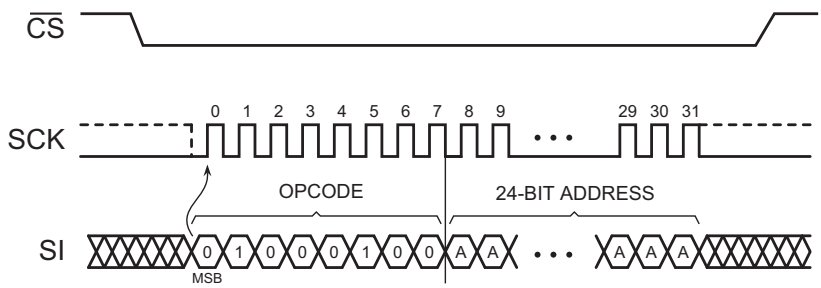

Figure 28. Erase Security Register Page

© 2025 Renesas Electronics

Downloaded from Arrow.com.

10.3 Program Security Registers (42h)

The Program Security Registers command uses the internal 256-byte buffer for processing. Thus, the contents of the buffer are altered from their previous state when this command is issued.

The Security Registers can be programmed in a similar fashion to the Program Array operation up to the maximum clock frequency specified by f_{CLK}. Before a Program Security Registers command can be started, the Write Enable command must have been previously issued to the device (see Section 9.1) to set the Write Enable Latch (WEL) bit of the Status Register to a logical 1 state. To program the Security Registers, the $\overline{CS}$ pin must first be asserted, and the opcode of 42h must be clocked into the device. After the opcode has been clocked in, the three address bytes must be clocked in to specify the starting address location of the first byte to program within the Security Register.

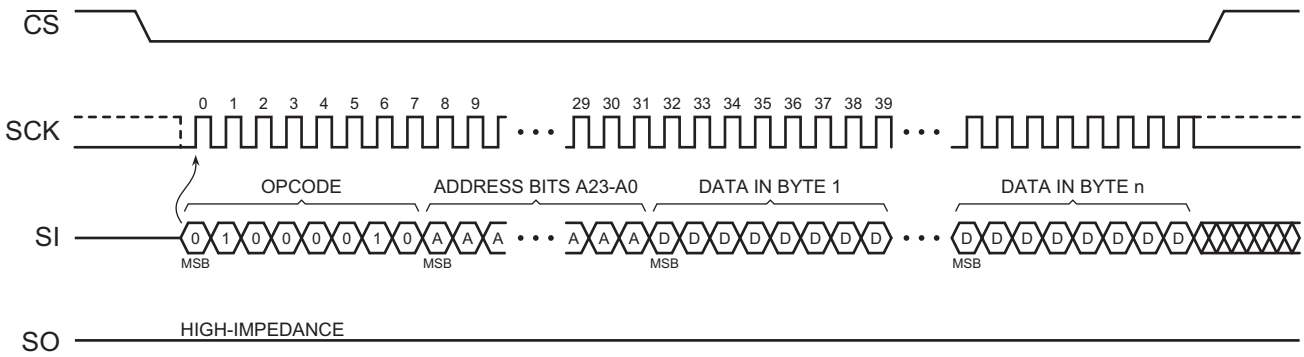

Figure 29. Program Security Registers

Table 9. Security Register Addresses for Program Security Registers Command

Address	A23-A16	A15-A12	A11-A8	A7-A0
Security Register 1	00h	1h	0h	Byte Address
Security Register 2	00h	2h	0h	Byte Address
Security Register 3	00h	3h	0h	Byte Address

© 2025 Renesas Electronics

Downloaded from Arrow.com.

10.4 Read Security Registers (48h)

The Security Register can be sequentially read in a similar fashion to the Read Array operation up to the maximum clock frequency specified by f_{CLK}. To read the Security Register, the $\overline{CS}$ pin must first be asserted and the opcode of 48h must be clocked into the device. After the opcode has been clocked in, the three address bytes must be clocked in to specify the starting address location of the first byte to read within the Security Register. Following the three address bytes, one dummy byte must be clocked into the device before data can be output.

After the three address bytes and the dummy byte have been clocked in, additional clock cycles result in the Security Register data being output on the SO pin. When the last byte (0003FFh) of the Security Register has been read, the device continues reading back at the beginning of the register (000000h). No delays are incurred when wrapping around from the end of the register to the beginning of the register.

Deasserting the $\overline{CS}$ pin terminates the read operation and puts the SO pin into a high-impedance state. The $\overline{CS}$ pin can be deasserted at any time and does not require that a full byte of data be read.

Table 10. Security Register Addresses for Read Security Registers Command

Address	A23-A16	A15-A12	A11-A8	A7-A0
Security Register 1	00h	1h	0h	Byte Address
Security Register 2	00h	2h	0h	Byte Address
Security Register 3	00h	3h	0h	Byte Address

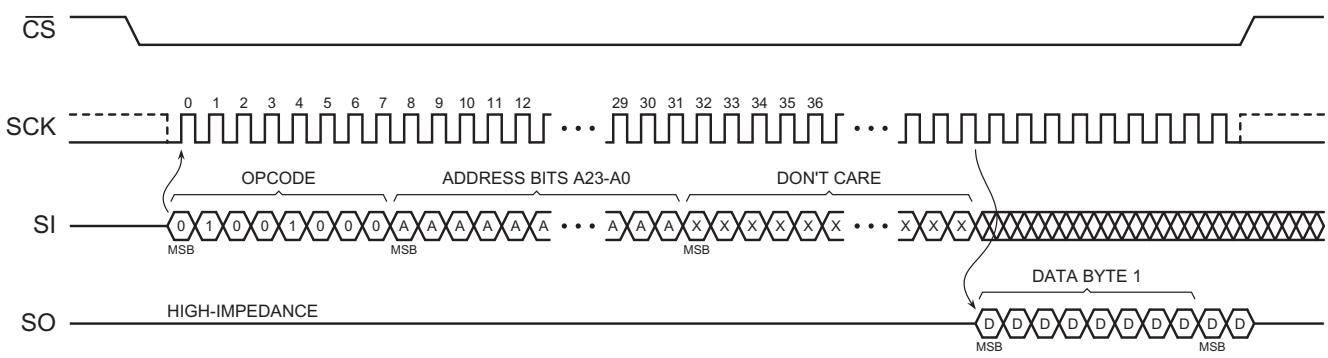

Figure 30. Read Security Registers

© 2025 Renesas Electronics

Downloaded from Arrow.com.

11. Status Register Commands

11.1 Read Status Register (05h, 35h, and 15h)

The Status Register can be read to determine the device's ready/busy status, as well as the status of many other functions, such as Block Protection. The Status Register can be read at any time, including during an internally self-timed program or erase operation.

To read Status Register Byte 1, the $\overline{CS}$ pin must first be asserted and the opcode of 05h must be clocked into the device. After the opcode has been clocked in, the device begins outputting Status Register Byte 1 data on the SO pin during every subsequent clock cycle. After the last bit (0) of Status Register Byte 1 has been clocked out, the sequence repeats itself, starting again with bit 7, as long as the $\overline{CS}$ pin remains asserted and the clock pin is being pulsed. The data in the Status Register is constantly being updated, so each repeating sequence outputs new data. Deasserting the $\overline{CS}$ pin terminates the Read Status Register operation and puts the SO pin into a high-impedance state. The $\overline{CS}$ pin can be deasserted at any time and does not require that a full byte of data be read.

To read Status Register Byte 2, the $\overline{CS}$ pin must first be asserted, and the opcode of 35h must be clocked into the device. After the opcode has been clocked in, the device begins outputting Status Register Byte 2 data on the SO pin during every subsequent clock cycle. After the last bit (0) of Status Register Byte 2 has been clocked out, the sequence repeats itself starting again with bit 7 as long as the $\overline{CS}$ pin remains asserted and the clock pin is being pulsed. The data in the Status Register is constantly being updated, so each repeating sequence outputs new data. Deasserting the $\overline{CS}$ pin terminates the Read Status Register operation and puts the SO pin into a high-impedance state. The $\overline{CS}$ pin can be deasserted at any time and does not require that a full byte of data be read.

Table 11. Status Register 1 Bit Assignments

Bit[1]	Mnemonic	Name	Type	Description	
7	SRP0	Status Register Protection bit 0	R/W		See Table 15 on Status Register Protection.
6	BP4	Block Protection bit 4	R/W		See Table 6 and Table 7 on Non-Volatile Protection.
5	BP3	Block Protection bit 3	R/W		
4	BP2	Block Protection bit 2	R/W		
3	BP1	Block Protection bit 1	R/W		
2	BP0	Block Protection bit 0	R/W		
1	WEL	Write Enable Latch Status	R	0	Device is not Write Enabled (default).
				1	Device is Write Enabled.
0	$\overline{RDY}$/BSY	Ready/Busy Status	R	0	Device is ready.
				1	Device is busy with an internal operation.

1. Only bits designated as R/W can be modified when using the Write Status Register command. Bits designated as R cannot be modified.
2. R/W = Readable and writable; R = Readable only.

© 2025 Renesas Electronics

Downloaded from Arrow.com.

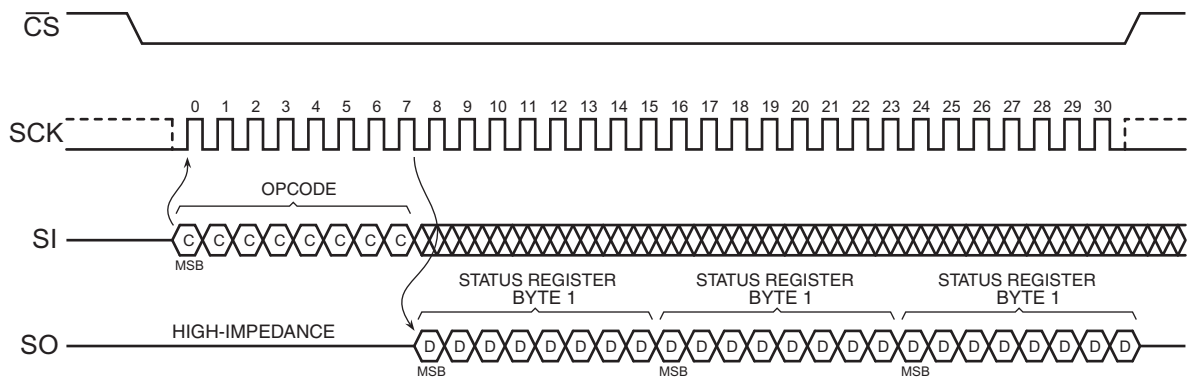

Figure 31. Read Status Register 1

Table 12. Status Register 2 Bit Assignments

Bit(1)	Name		Type	Description	
7	E_SUS	Erase Suspend Status	R	0	Erase operation is not suspended (default).
				1	Erase operation is suspended.
6	CMP	Complement Block Protection	R/W	0	See table on Block Protection.
5	LB3	Lock Security Register 3	R/W	0	Security Register page-3 is not locked (default).
				1	Security Register page-3 cannot be erased/programmed.
4	LB2	Lock Security Register 2	R/W	0	Security Register page-2 is not locked (default).
				1	Security Register page-2 cannot be erased/programmed.
3	LB1	Lock Security Register 1	R/W	0	Security Register page-1 is not locked (default).
				1	Security Register page-1 cannot be erased/programmed.
2	P_SUS	Program Suspend Status	R	0	Program operation is not suspended (default).
				1	Program operation is suspended.
1	QE	Quad Enable	R/W	0	$\overline{HOLD}$ and $\overline{WP}$ function normally (default).
				1	$\overline{HOLD}$ and $\overline{WP}$ are I/O pins.
0	SRP1	Status Register Protect bit 1	R/W		See Table 15 on Status Register Protection.

1. Only bits designated as R/W can be modified when using the Write Status Register command. Bits designated as R cannot be modified.
2. R/W = Readable and writable; R = Readable only.

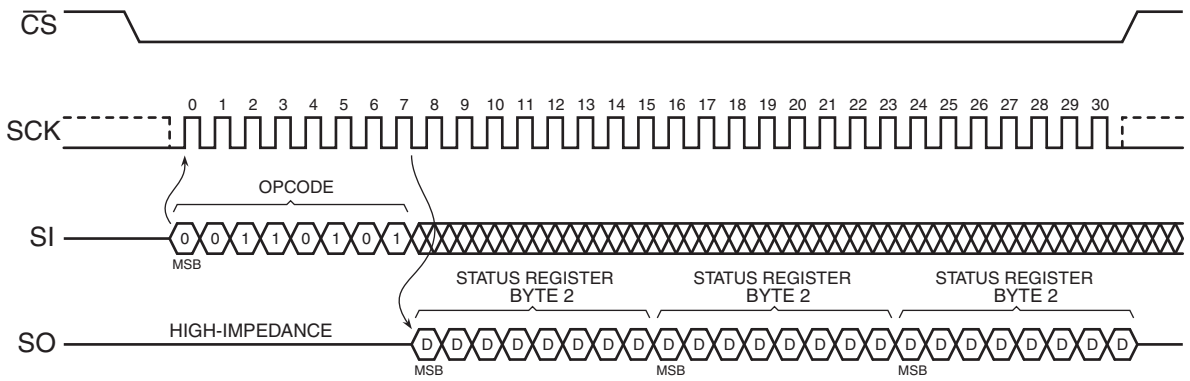

Figure 32. Read Status Register 2

© 2025 Renesas Electronics

Downloaded from Arrow.com.

Table 13 shows the bit assignments for Status Register 3. This register can be read using the Status Register 3 Read command (15h), and written using the Status Register 3 Write command (11h).

Table 13. Status Register 3 Bit Assignments

Bit(1)	Mnemonic	Name	Type(2)	Description	
7	Res	Reserved	R/W	0	Reserved bit.
6:5	DRV[1:0]	Drive Strength	R/W	00	Drive level. The DRV1 and DRV0 bits are used to determine the output driver strength during read operations. See Table 14
4:0	Res	Reserved	R/W	0	Reserved bit.

1. Only bits designated as R/W can be modified when using the Write Status Register command. Bits designated as R cannot be modified.
2. R/W = Readable and writable; R = Readable only.

Table 14. DRV1, DRV0

DRV1, DRV0	Driver Strength
00	100% (Default)
01	75%
10	50%
11	25%

11.1.1 SRP1, SRP0 Bits

The SRP1 and SRP0 bits determine if the Status Register can be modified. The state of the $\overline{WP}$ pin, along with the values of the SRP1 and SRP0, determine if the device is software-protected, hardware-protected, or permanently protected, as shown in Table 15.

Table 15. Status Register Protection Table

SRP1	SRP0	$\overline{WP}$	Status Register	Description
0	0	X	Software Protected	The Status Register can be written to after a Write Enable command, WEL = 1.(Factory Default)
0	1	0	Hardware Protected	$\overline{WP}$ = 0, the Status Register is locked and cannot be written.
0	1	1	Hardware Unprotected	$\overline{WP}$ = 1, the Status Register is unlocked and can be written to after a Write Enable command, WEL = 1.
1	0	X	Power Supply Lock-Down	Status Register is protected and cannot be written to again until the next Power-Down, Power-Up cycle.

1. When SRP1, SRP0 = (1, 0), a Power-Down, Power-Up cycle changes SRP1, SRP0 to the (0, 0) state.

11.1.2 CMP, BP4, BP3, BP2, BP1, BP0 Bits

The CMP, BP4, BP3, BP2, BP1, and BP0 bits control which portions of the array are protected from erase and program operations (see Table 6 and Table 7).

The CMP bit complements the effect of the other bits.

The BP4 bit selects between large and small block size protection.

The BP3 bit selects between top of the array or bottom of the array protection.

The BP2, BP1, and BP0 bits determine how much of the array is protected.

11.1.3 WEL Bit

The WEL bit indicates the current status of the internal Write Enable Latch. When the WEL bit is in the logical 0 state, the device does not accept any Byte/Page Program, erase, Program Security Register, Erase Security

© 2025 Renesas Electronics

Downloaded from Arrow.com.

Register, or Write Status Register commands. The WEL bit defaults to the logical 0 state after a device power-up or reset operation. Also, the WEL bit is reset to the logical 0 state automatically under the following conditions:

- Write Disable operation completes successfully.
- Write Status Register operation completes successfully or aborts.
- Program Security Register operation completes successfully or aborts.
- Erase Security Register operation completes successfully or aborts.
- Byte/Page Program operation completes successfully or aborts.
- Block Erase operation completes successfully or aborts.
- Chip Erase operation completes successfully or aborts.

If the WEL bit is in the logical 1 state, it is not reset to a logical 0 if an operation aborts because of an incomplete or unrecognized opcode being clocked into the device before the $\overline{CS}$ pin is deasserted. For the WEL bit to be reset when an operation aborts prematurely, the entire opcode for a Byte/Page Program, erase, Program Security Register, Erase Security Register, or Write Status Register command must have been clocked into the device.

11.1.4 $\overline{RDY}$/BSY Bit

The $\overline{RDY}$/BSY bit is used to determine whether or not an internal operation, such as a program or erase, is in progress. To poll the $\overline{RDY}$/BSY bit to detect the completion of a program or erase cycle, new Status Register data must be continually clocked out of the device until the state of the $\overline{RDY}$/BSY bit changes from a logical 1 to a logical 0.

11.1.5 LB3, LB2, LB1 Bits

The LB3, LB2, and LB1 bits are used to determine if any of the three Security Register pages are locked.

The LB3 bit is in the logical 1 state if Security Register page-2 is locked and cannot be erased or programmed.

The LB2 bit is in the logical 1 state if Security Register page-1 is locked and cannot be erased or programmed.

The LB1 bit is in the logical 1 state if Security Register page-0 is locked and cannot be erased or programmed.

11.1.6 E_SUS Bit

This bit is set and cleared by hardware and indicates the status of an erase operation. This bit is encoded as follows:

0: Erase operation is not suspended (default).
1: Erase operation is suspended.

Hardware clears this bit once the condition that caused the erase suspend operation has been removed. Hardware typically sets this bit when a Program/Erase Suspend (75h) command is executed, and clears the bit when a Program/Erase Resume (7Ah) command is executed.

11.1.7 P_SUS Bit

This bit is set and cleared by hardware and indicates the status of an program operation. This bit is encoded as follows:

0: Program operation is not suspended (default).
1: Program operation is suspended.

Hardware clears this bit once the condition that caused the program suspend operation has been removed. Hardware typically sets this bit when a Program/Erase Suspend (75h) command is executed, and clears the bit when a Program/Erase Resume (7Ah) command is executed.

© 2025 Renesas Electronics

Downloaded from Arrow.com.

11.1.8 QE Bit

The QE bit determines if the device is in the Quad Enabled mode. If it is in the logical 1 state, the $\overline{HOLD}$ and $\overline{WP}$ pins functions as input/output pins similar to the SI and SO. If it is in the logical 0 state, the $\overline{HOLD}$ pin functions as an input only, and the $\overline{WP}$ pin functions as an input only.

11.2 Write Status Register (01h)

The Write Status Register command modifies the Block Protection, Security Register Lock-down, Quad Enable, and Status Register Protection. Before the Write Status Register command can be issued, the Write Enable command must have been previously issued to set the WEL bit in the Status Register to a logical 1.

The $\overline{CS}$ pin must be driven high after the eighth bit of the data byte has been latched in. If not, the Write Status Register command is not executed. As soon as the $\overline{CS}$ pin is driven high, the self-timed Write Status Register cycle is initiated.

While the Write Status Register cycle is in progress, the Status Register can be read to check the value of the RDY/BSY bit. The RDY/BSY bit is 1 during the self-timed Write Status Register cycle, and 0 when it is completed. When the cycle is completed, the Write Enable Latch is reset.

The Write Status Register command allows the user to change the values of the Block Protect (BP4, BP3, BP2, BP1, BP0) bits, to define the size of the area that is to be treated as read-only. The Write Status Register command also allows the user to set or reset the Status Register Protect (SRP1 and SRP0) bits in accordance with the Write Protect ($\overline{WP}$) pin.

The Status Register Protect (SRP1 and SRP0) bits and $\overline{WP}$ pin allow the device to be put in the hardware protected mode. The Write Status Register command is not executed once the hardware protected mode is entered.

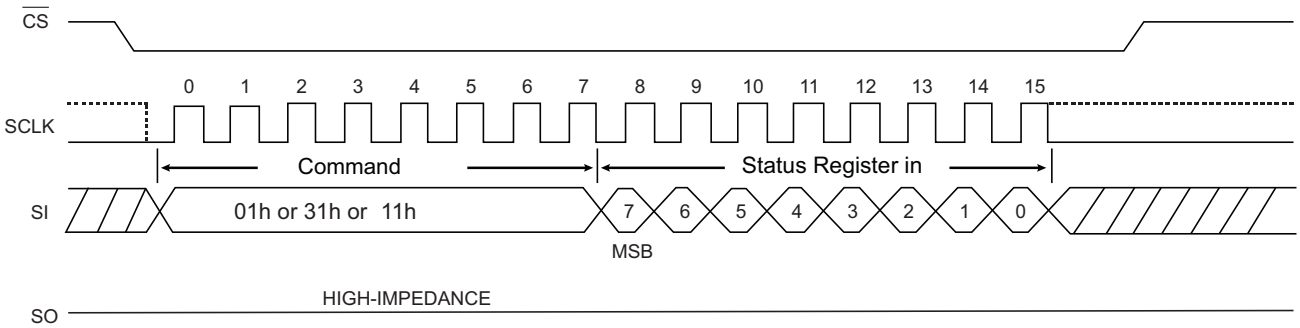

Figure 33. Write Status Register

.

Table 16. Write Status Register 1

Bit 7	Bit 6	Bit 5	Bit 4	Bit 3	Bit 2	Bit 1	Bit 0
SRP0	BP4	BP3	BP2	BP1	BP0	WEL	$\overline{RDY}$/BSY

Table 17. Write Status Register 2

Bit 7	Bit 6	Bit 5	Bit 4	Bit 3	Bit 2	Bit 1	Bit 0
E_SUS	CMP	LB3	LB2	LB1	P_SUS	QE	SRP1

© 2025 Renesas Electronics

Downloaded from Arrow.com.

Table 18. Write Status Register 3

Bit 7	Bit 6	Bit 5	Bit 4	Bit 3	Bit 2	Bit 1	Bit 0
Reserved	DRV1	DRV0	Reserved	Reserved	Reserved	Reserved	Reserved

11.3 Write Enable for Volatile Status Register (50h)

The non-volatile Status Register bits can be written to as volatile bits. During power-up reset, the non-volatile Status Register bits are copied to a volatile version of the Status Register that is used during device operation. This gives more flexibility to change the system configuration and memory protection schemes quickly without waiting for the typical non-volatile bit write cycles or affecting the endurance of the Status Register non-volatile bits.

To write the volatile version of the Status Register bits, the Write Enable for Volatile Status Register (50h) command must be issued prior to each Write Status Registers (01h) command. The Write Enable for Volatile Status Register command does not set the Write Enable Latch bit. It is valid only for the next Write Status Registers command, to change the volatile Status Register bit values.

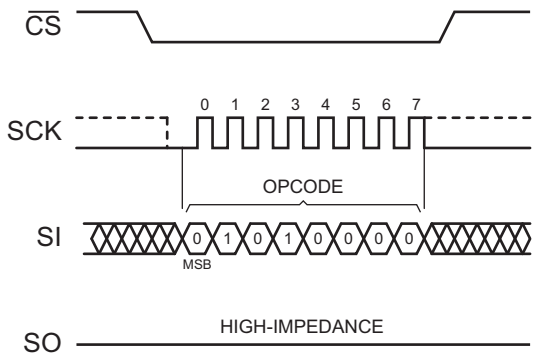

Figure 34. Write Enable for Volatile Status Register

© 2025 Renesas Electronics

Downloaded from Arrow.com.

12. Other Commands and Functions

The AT25SF321B supports commands to access device identification that indicates the manufacturer, device type, and memory density. The returned data bytes provide the information shown in Table 19.

Table 19. Manufacturer and Device ID Information

Command	Opcode	Manufacturer ID	First Device ID Byte	Second Device ID Byte
Read Manufacturer and Device ID	9Fh	1Fh	87h	01h
Read ID (Legacy Command)	90h	1Fh		15h
Read ID (Dual I/O)	92h	1Fh		15h
Read ID (Quad I/O)	94h	1Fh		15h
Resume from Deep Power-Down and Read Device ID	ABh			15h

© 2025 Renesas Electronics

Downloaded from Arrow.com.

12.1 Read Manufacturer and Device ID (9Fh)

Identification information can be read from the device to enable systems to electronically query and identify the device.

Since not all Flash devices are capable of operating at very high clock frequencies, design applications to read the identification information from the devices at a reasonably low clock frequency to ensure all devices used in the application can be identified properly. Once the identification process is complete, the application can increase the clock frequency to accommodate specific Flash devices that are capable of operating at the higher clock frequencies.

To read the identification information, the $\overline{CS}$ pin must first be asserted and the opcode of 9Fh must be clocked into the device. After the opcode has been clocked in, the device begins outputting the identification data on the SO pin during the subsequent clock cycles. The first byte output is the Manufacturer ID, followed by two bytes of Device ID information. Deasserting the $\overline{CS}$ pin terminates the Manufacturer and Device ID read operation and puts the SO pin into a high-impedance state. The $\overline{CS}$ pin can be deasserted at any time and does not require that a full byte of data be read.

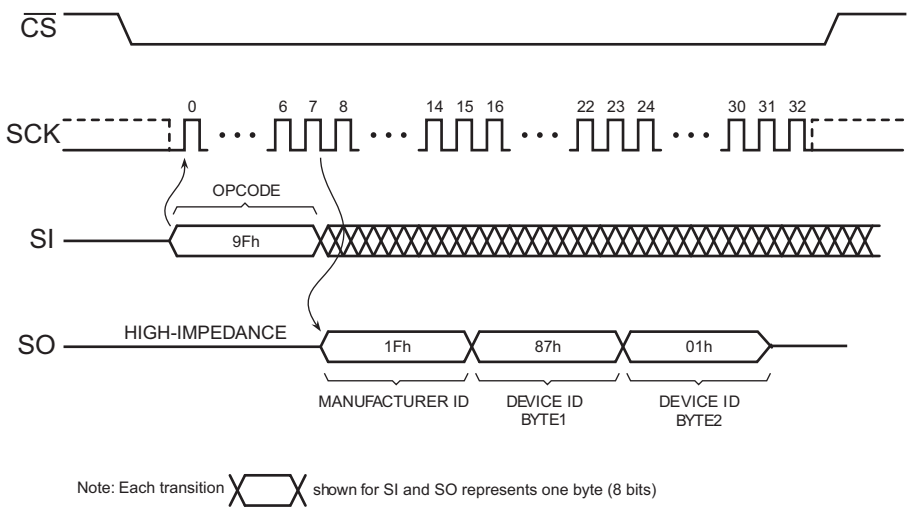

Figure 35. Read Manufacturer and Device ID

© 2025 Renesas Electronics

Downloaded from Arrow.com.

12.2 Read ID (Legacy Command) (90h)

Identification information can be read from the device to enable systems to electronically query and identify the device. The JEDEC standard Section 12.1method, described in Section 12.1, is preferred; however, the legacy Read ID command is supported on the AT25SF321B to enable backwards compatibility to previous generation devices.

To read the identification information, the $\overline{CS}$ pin must first be asserted, and the opcode 90h must be clocked into the device, followed by three dummy bytes. After the opcode has been clocked, in followed by three dummy bytes, the device begins outputting the identification data on the SO pin during the subsequent clock cycles. The first byte output is the Manufacturer ID of 1Fh, followed by a single byte of data representing a device code 15h. After the device code is output, the sequence of bytes repeats.

Deasserting the $\overline{CS}$ pin terminates the Read ID operation and puts the SO pin into a high-impedance state. The $\overline{CS}$ pin can be deasserted at any time and does not require that a full byte of data read.

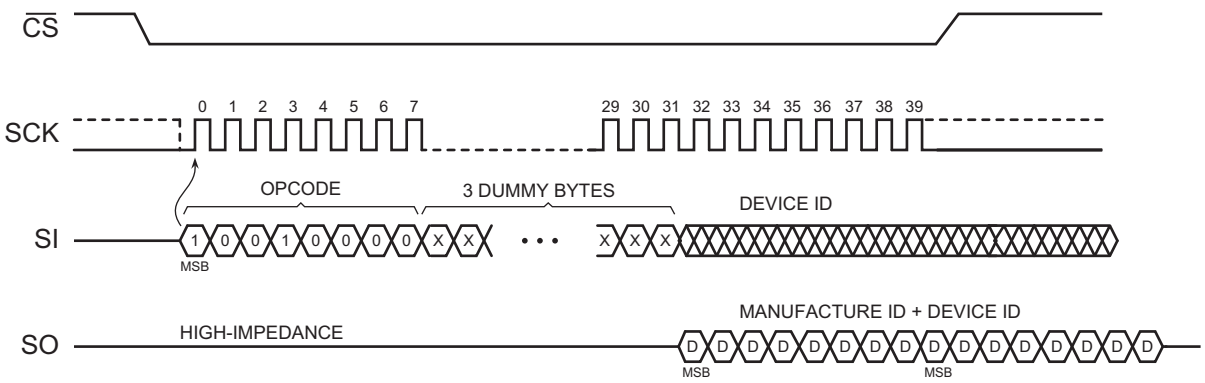

Figure 36. Read ID (Legacy Command)

© 2025 Renesas Electronics

Downloaded from Arrow.com.

12.3 Dual I/O Read Manufacture ID/ Device ID (92h)

The Dual I/O Read Manufacturer/Device ID command is an alternative to the Release from Power-Down/Device ID command that provides both the JEDEC-assigned Manufacturer ID and the specific Device ID by Dual I/O.

The command is initiated by driving the $\overline{CS}$ pin low and shifting the command code 92h, followed by a 24-bit address (A23 - A0) of 000000h. If the 24-bit address is initially set to 000001h, the Device ID is read first.

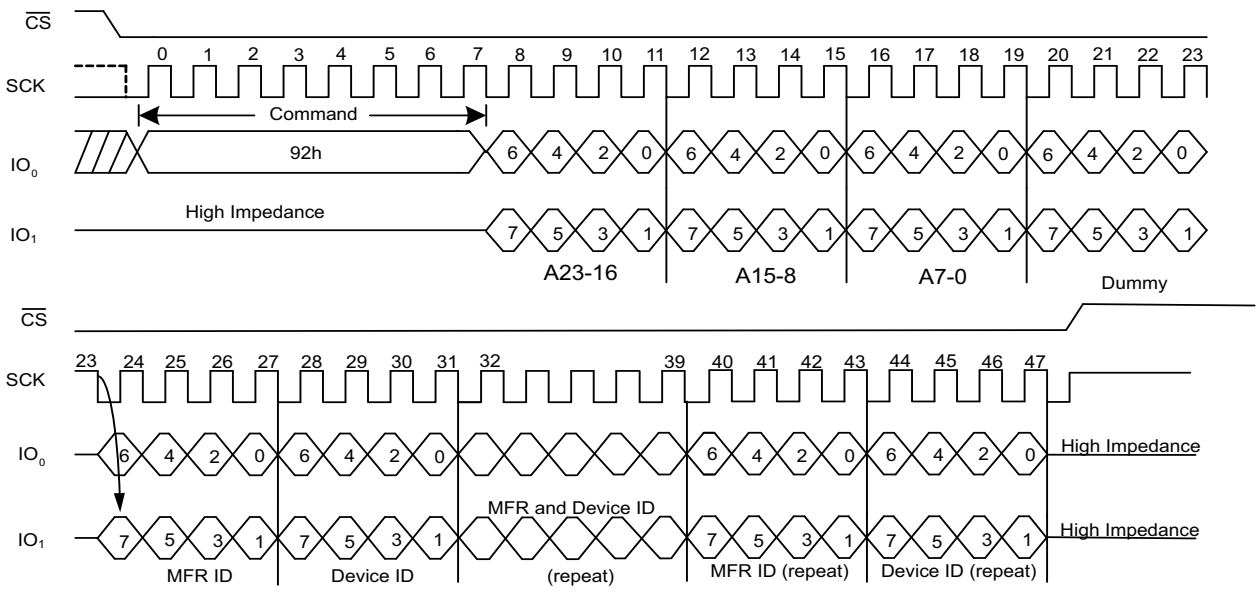

Figure 37. Dual I/O Read Manufacture ID/ Device ID Timing

© 2025 Renesas Electronics

Downloaded from Arrow.com.

12.4 Quad I/O Read Manufacture ID / Device ID (94h)

The Quad I/O Read Manufacturer/Device ID command is an alternative to the Release from Power-Down/Device ID command that provides both the JEDEC assigned Manufacturer ID and the specific Device ID by quad I/O.

The command is initiated by driving the $\overline{CS}$ pin low and shifting the command code 94h, followed by a 24-bit address (A23 - A0) of 000000h and four dummy clocks. If the 24-bit address is initially set to 000001h, the Device ID is read out first.

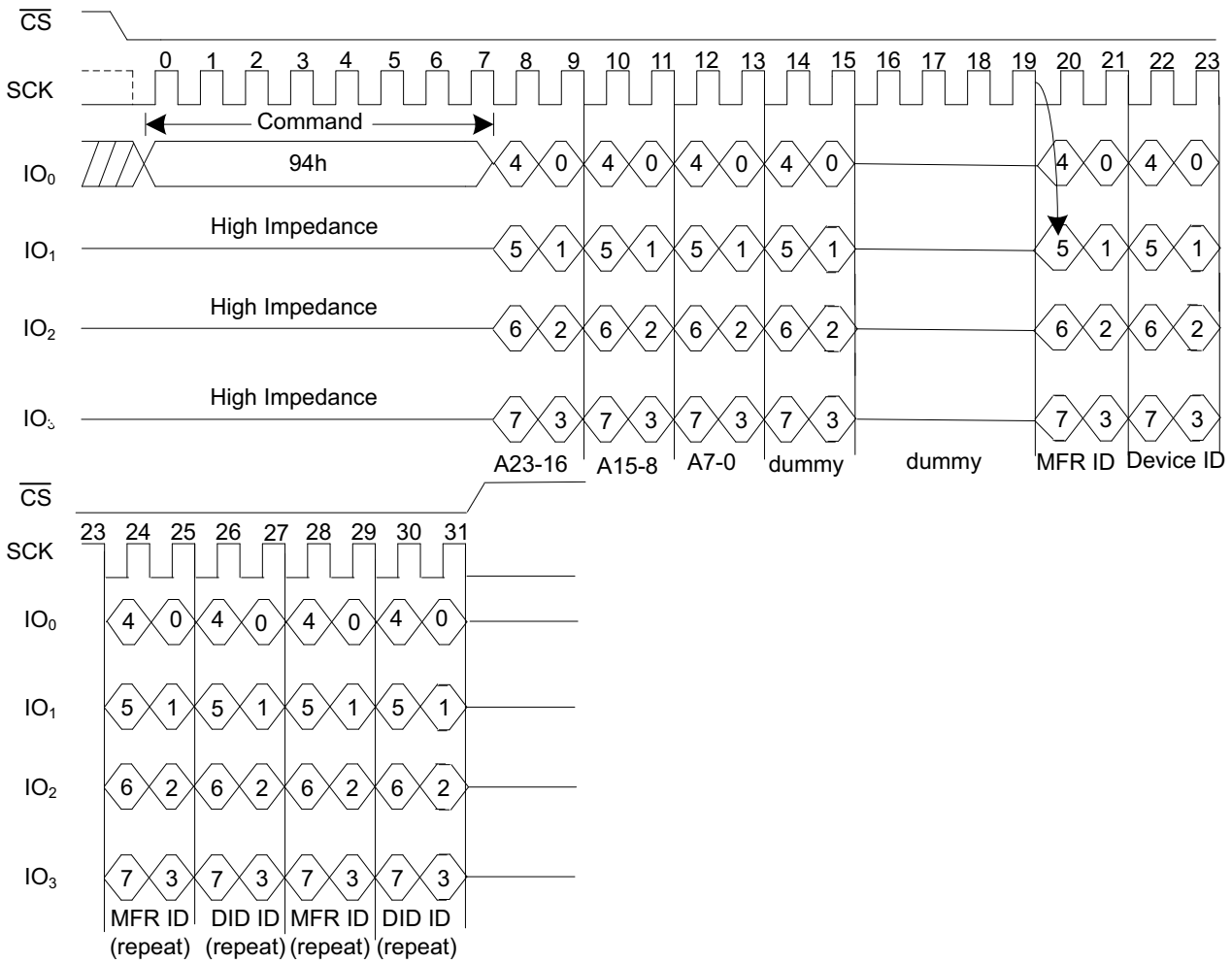

Figure 38. Quad I/O Read Manufacture ID / Device ID Sequence Diagram

© 2025 Renesas Electronics

Downloaded from Arrow.com.

12.5 Deep Power-Down (B9h)

During normal operation, the device is placed in Standby Mode to consume less power as long as the $\overline{CS}$ pin remains deasserted and no internal operation is in progress. The Deep Power-Down command lets the device be put into an even lower-power consumption state, called the Deep Power-Down mode.

When the device is in the Deep Power-Down mode, all commands, including the Read Status Register command, are ignored, with the exception of the Resume from Deep Power-Down command. Since all commands are ignored, the mode can be used as an extra protection mechanism against program and erase operations.

Entering the Deep Power-Down mode is done by asserting the $\overline{CS}$ pin, clocking in the opcode of B9h, and then deasserting the $\overline{CS}$ pin. Any additional data clocked into the device after the opcode is ignored. When the $\overline{CS}$ pin is deasserted, the device enters the Deep Power-Down mode.

The complete opcode must be clocked in before the $\overline{CS}$ pin is deasserted, and the $\overline{CS}$ pin must be deasserted on an byte boundary (multiples of eight bits); otherwise, the device aborts the operation and returns to the Standby Mode once the $\overline{CS}$ pin is deasserted. Also, the device defaults to the Standby Mode after a power-cycle.

The Deep Power-Down command is ignored if an internally self-timed operation, such as a program or erase cycle, is in progress. The Deep Power-Down command must be reissued after the internally self-timed operation has been completed in order for the device to enter the Deep Power-Down mode.

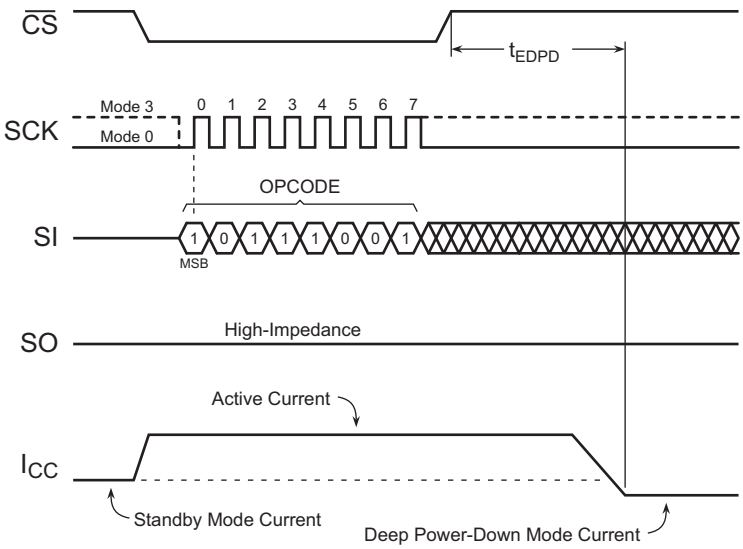

Figure 39. Deep Power-Down

© 2025 Renesas Electronics

Downloaded from Arrow.com.

12.6 Resume from Deep Power-Down (ABh)

To exit the Deep Power-Down mode and resume normal device operation, the Resume from Deep Power-Down command must be issued. The Resume from Deep Power-Down command is the only command that the device recognizes while in the Deep Power-Down mode.

To resume from the Deep Power-Down mode, the $\overline{CS}$ pin must be asserted first, and the opcode of ABh must be clocked into the device. Any additional data clocked into the device after the opcode is ignored. When the $\overline{CS}$ pin is deasserted, the device exits the Deep Power-Down mode and returns to the Standby Mode. After the device has returned to the Standby Mode, normal command operations, such as Read Array, can be resumed.

If the complete opcode is not clocked in before the $\overline{CS}$ pin is deasserted, or if the $\overline{CS}$ pin is not deasserted on an byte boundary (multiples of eight bits), the device aborts the operation and returns to the Deep Power-Down mode.

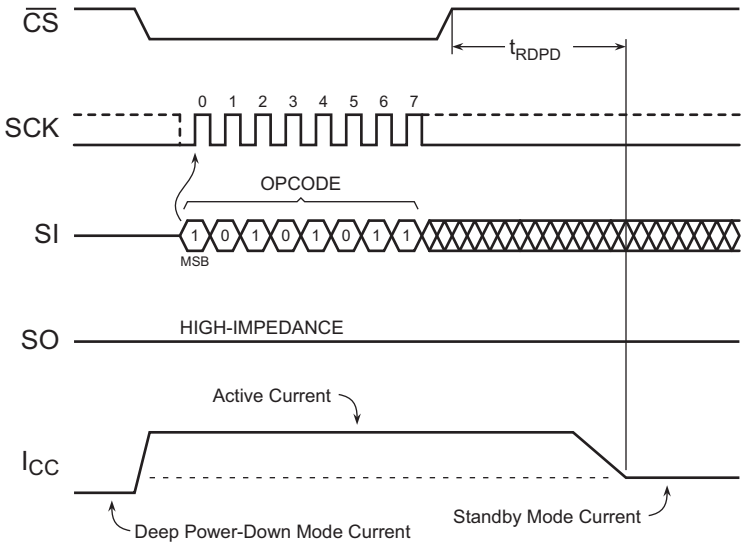

Figure 40. Resume from Deep Power-Down

© 2025 Renesas Electronics

Downloaded from Arrow.com.

12.6.1 Resume from Deep Power-Down and Read Device ID (ABh)

The Resume from Deep Power-Down command also can be used to read the Device ID.

When used to release the device from the Power-Down state and obtain the Device ID, the $\overline{CS}$ pin must first be asserted and opcode ABh must be clocked into the device, followed by three dummy bytes. The Device ID bits are then shifted out on the falling edge of SCK with the MSB first, as shown in Figure 41. This command only outputs a single byte Device ID. The Device ID value for the AT25SF321B is listed in Table 19.

After the last bit (0) of the Device ID has been clocked out, the sequence repeats itself, starting again with bit 7, as long as the $\overline{CS}$ pin remains asserted and the SCK pin is being pulsed. After $\overline{CS}$ is deasserted, it must remain high until new commands can be received.

The same command can be used to read the device ID when not in power-down mode. In that case, $\overline{CS}$ does not have to remain high remain after it is deasserted.

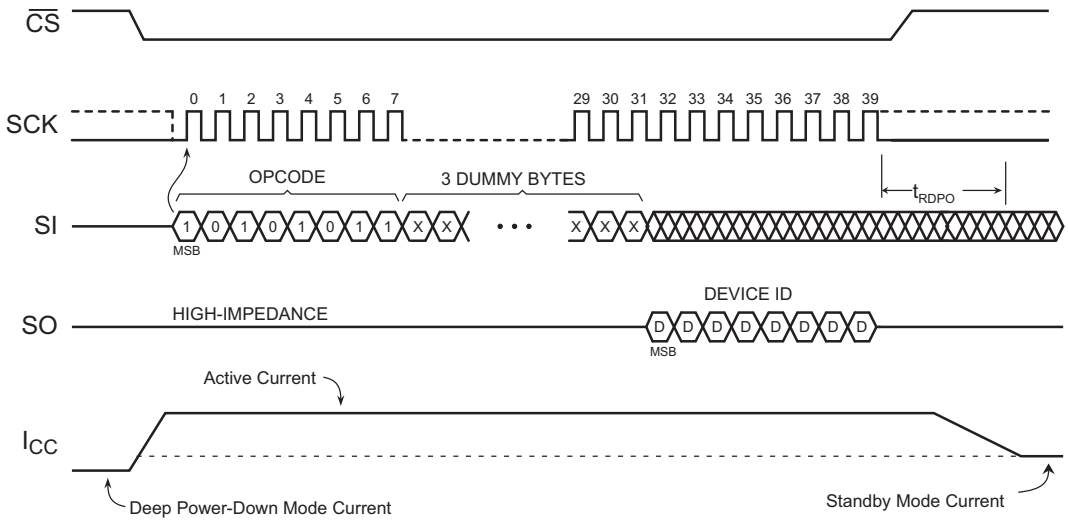

Figure 41. Resume from Deep Power-Down and Read Device ID Timing

12.7 Hold Function

The $\overline{HOLD}$ pin pauses the serial communication with the device without having to stop or reset the clock sequence. This mode does not affect internally self-timed operations, such as a program or erase cycle. Thus, if an erase cycle is in progress, asserting the $\overline{HOLD}$ pin does not pause the operation, and the erase cycle continues until it is finished.

If the QE bit value in the Status Register has been set to 1, the $\overline{HOLD}$ pin does not function as a control pin. The $\overline{HOLD}$ pin functions as an output for Quad-Output Read and input/output for Quad-I/O Read.

The Hold mode can only be entered while the $\overline{CS}$ pin is asserted. This mode is activated by asserting the $\overline{HOLD}$ pin during the SCK low pulse. If the $\overline{HOLD}$ pin is asserted during the SCK high pulse, the Hold mode is not started until the beginning of the next SCK low pulse. The device remains in this mode as long as the $\overline{HOLD}$ pin and $\overline{CS}$ pin are asserted.

While in the Hold mode, the SO pin is in a high-impedance state. Also, both the SI pin and the SCK pin are ignored. The $\overline{WP}$ pin, however, can be asserted or deasserted while in the Hold mode.

To end the Hold mode and resume serial communication, the $\overline{HOLD}$ pin must be deasserted during the SCK low pulse. If the $\overline{HOLD}$ pin is deasserted during the SCK high pulse, the Hold mode does not end until the beginning of the next SCK low pulse.

If the $\overline{CS}$ pin is deasserted while the $\overline{HOLD}$ pin is asserted, any operations that have been started are aborted, and the device resets the WEL bit in the Status Register to 0.

© 2025 Renesas Electronics

Downloaded from Arrow.com.

13. Electrical Specifications

13.1 Absolute Maximum Ratings

Temperature under Bias . . . . . -55 °C to +125 °C
Storage Temperature. . . . . -65 °C to +150 °C
All Input Voltages (including NC Pins) with Respect to Ground. . . . . -0.6 V to +4.1 V
All Output Voltages with Respect to Ground. . . . .-0.6 V to V_{CC} + 0.5 V

Notice: Stresses beyond those listed here can cause permanent damage to the device. This is a stress rating only; functional operation of the device at these or any other conditions beyond those indicated in the operational sections of this specification is not implied. Exposure to absolute maximum rating conditions for extended periods can affect device reliability.

13.2 DC and AC Operating Range

Parameter	Condition	Value
Operating Temperature (Case)	Industrial	-40 °C to 85 °C
V_{CC} Power Supply		2.7 V to 3.6 V

Symbol	Parameter	Condition	2.7 V to 3.6 V			Units
			Min	Typ [1]	Max	
I_{DPD}	Deep Power-Down Current	$\overline{CS}$, $\overline{HOLD}$, $\overline{WP}$ = V_{IH} All inputs at CMOS levels		1	5	µA
I_{SB}	Standby Current	$\overline{CS}$, $\overline{HOLD}$, $\overline{WP}$ = V_{IH} All inputs at CMOS levels		13	25	µA
I_{CC1}	Active Current, Read (03h, 0Bh) Operation	f = 20 MHz; I_{OUT} = 0		3	4.2	mA
		f = 50 MHz; I_{OUT} = 0		3.6	5.2	mA
		f = 85 MHz; I_{OUT} = 0		4.6	7.8	mA
I_{CC2}	Active Current,(3Bh, BBh Read Operation (Dual)	f = 50 MHz; I_{OUT} = 0		4.6	6.4	mA
		f = 85 MHz and 108 MHz; I_{OUT} = 0		6.4	8.8	mA
I_{CC3}	Active Current,(6Bh, EBh Read Operation (Quad)	f = 50 MHz; I_{OUT} = 0		5.6	8	mA
		f = 85 MHz and 108 MHz; I_{OUT} = 0		8.2	12	mA
I_{CC4}	Active Current, Program Operation	$\overline{CS}$ = V_{CC}		9	17	mA
I_{CC5}	Active Current, Erase Operation	$\overline{CS}$ = V_{CC}		7	11.5	mA
I_{LI}	Input Load Current	All inputs at CMOS levels			±2	µA
I_{LO}	Output Leakage Current	All inputs at CMOS levels			±2	µA
V_{IL}	Input Low Voltage		-0.5		V_{CC} x 0.2	V
V_{IH}	Input High Voltage		V_{CC} x 0.8		V_{CC} + 0.4	V
V_{OL}	Output Low Voltage	I_{OL} = 100 µA			0.4	V
V_{OH}	Output High Voltage	I_{OH} = -100 µA	V_{CC} - 0.2			V

1. Typical values measured at 3.0 V @ 25°C.

© 2025 Renesas Electronics

Downloaded from Arrow.com.

13.3 AC Characteristics - Maximum Clock Frequencies

Symbol	Parameter	2.7 V to 3.6 V			3.0 V to 3.6 V			Units
		Min	Typ	Max	Min	Typ	Max	
f_{CLK}	Maximum Clock Frequency for all opcodes except 03h, 3Bh, 0Bh, 6Bh, EBh			108			133	MHz
	Maximum Clock Frequency for opcode BBh			108			133	MHz
	Maximum Clock Frequency for opcode E7h			85			133	MHz
	Maximum Clock Frequency for opcode 0Bh, 3Bh, 6Bh, EBh			85			108	MHz
	Maximum Clock Frequency for opcode 03h			55			55	MHz

Symbol [1]	Parameter	2.7 V to 3.6 V			Units
		Min	Typ	Max	
t_{CLKH}	Clock High Time	4			ns
t_{CLKL}	Clock Low Time	4			ns
t_{CLKR}	Clock Rise Time, Peak-to-Peak (Slew Rate)	0.1			V/ns
t_{CLK}	Clock Fall Time, Peak-to-Peak (Slew Rate)	0.1			V/ns
t_{CSH}	$\overline{CS}$ High Time	20			ns
t_{CSLS}	$\overline{CS}$ Low Setup Time (relative to Clock)	5			ns
t_{CSLH}	$\overline{CS}$ Low Hold Time (relative to Clock)	5			ns
t_{CSHS}	$\overline{CS}$ High Setup Time (relative to Clock)	5			ns
t_{CSHH}	$\overline{CS}$ High Hold Time (relative to Clock)	5			ns
t_{DS}	Data In Setup Time	2			ns
t_{DH}	Data In Hold Time	2			ns
t_{DIS}	Output Disable Time			6	ns
t_V	Output Valid Time			7	ns
t_{OH}	Output Hold Time	2			ns
t_{HLS}	$\overline{HOLD}$ Low Setup Time (relative to Clock)	5			ns
t_{HLH}	$\overline{HOLD}$ Low Hold Time (relative to Clock)	5			ns
t_{HHS}	$\overline{HOLD}$ High Setup Time (relative to Clock)	5			ns
t_{HHH}	$\overline{HOLD}$ High Hold Time (relative to Clock)	5			ns
t_{HLQZ}	$\overline{HOLD}$ Low to Output High-Z			6	ns
t_{HHQZ}	$\overline{HOLD}$ High to Output High-Z			6	ns
t_{RES1}	$\overline{CS}$ High to Standby Mode Without Electronic Signature Read			20	µs
t_{RES2}	$\overline{CS}$ High to Standby Mode With Electronic Signature Read			20	µs
t_{SUS}	$\overline{CS}$ High to Next Command After Suspend			20	µs
t_{WPS}	Write Protect Setup Time	20			ns
t_{WPH}	Write Protect Hold Time	100			ns
t_{EDPD}	$\overline{CS}$ High to Deep Power-Down			20	µs
t_{RDPD}	$\overline{CS}$ High to Standby Mode			20	µs
t_{RDPO}	Resume Deep Power-Down, $\overline{CS}$ High to ID			20	µs

1. Not 100% tested. Value guaranteed by design and characterization.

© 2025 Renesas Electronics

Downloaded from Arrow.com.

Symbol	Parameter	Condition	2.7 V to 3.6 V			
			Min	Typ [1]	Max [2]	Units
t_{PP}	Page Program Time (256 Bytes)			0.4	3.4	ms
t_{BP1}	First Byte Program Time			30	50	µs
t_{BP2}	Second Byte Program Time			1.5	7.6	µs
t_{BLKE}	Block Erase Time	4 kBytes		55	250	ms
		32 kBytes		120	450	
		64 kBytes		200	700	
t_{CHPE}	Chip Erase Time			10	30	sec
t_{WRSR}	Write Status Register Time			5	30	ms

1. Typical value is measured at 3.0 V, 25°C.
2. Unless specified otherwise, maximum is worst-case measurement at cycling conditions after 100k cycles.

13.4 Power-Up Conditions

Symbol	Parameter	Min	Max	Units
t_{VSL}	Minimum V_{CC} to Chip Select Low Time	70		µs

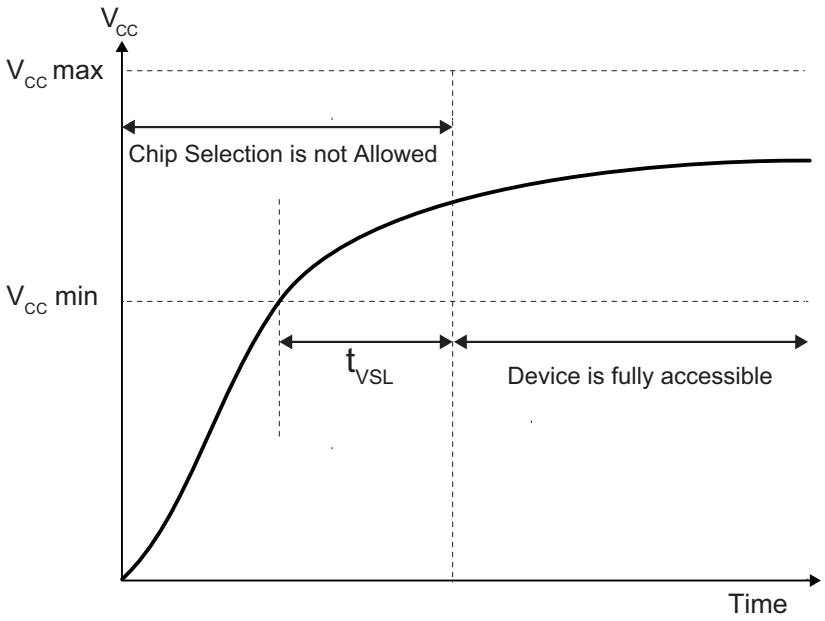

Figure 42. Power-Up Timing and Voltage Levels

13.5 Input Test Waveforms and Measurement Levels

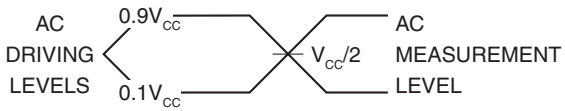

© 2025 Renesas Electronics

Downloaded from Arrow.com.

13.6 Output Test Load

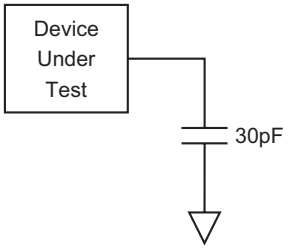

14. AC Waveforms

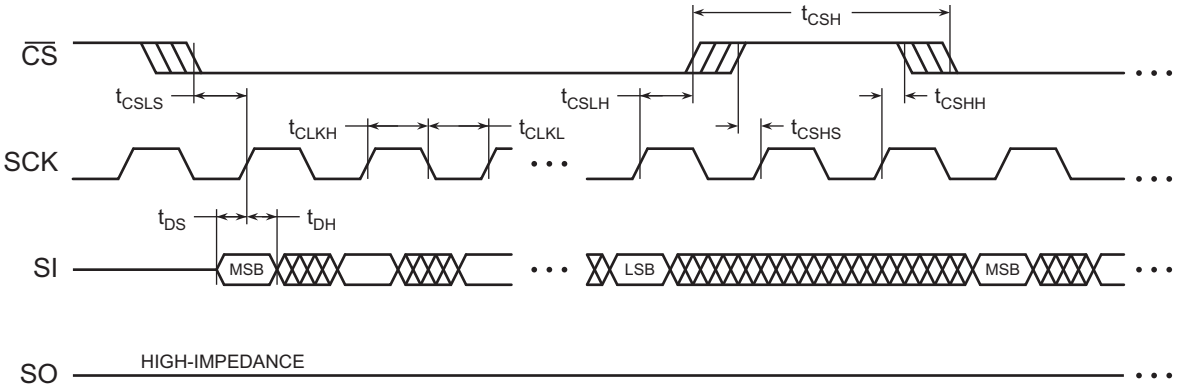

Figure 43. Serial Input Timing

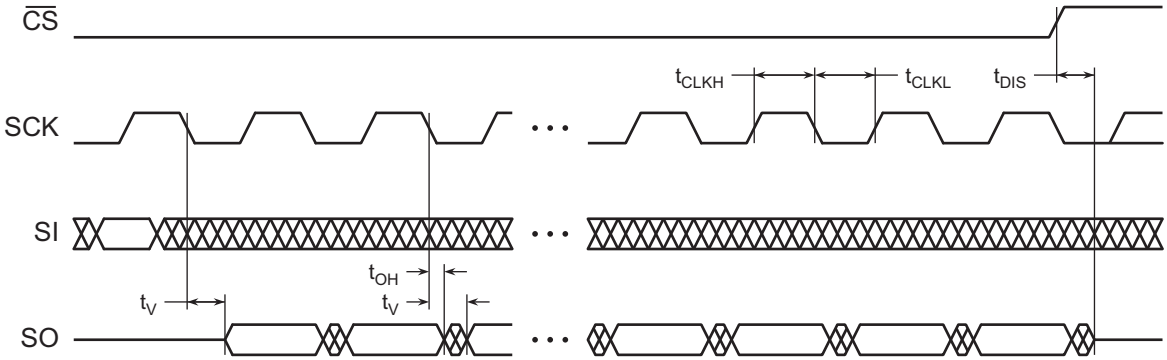

Figure 44. Serial Output Timing

© 2025 Renesas Electronics

Downloaded from Arrow.com.

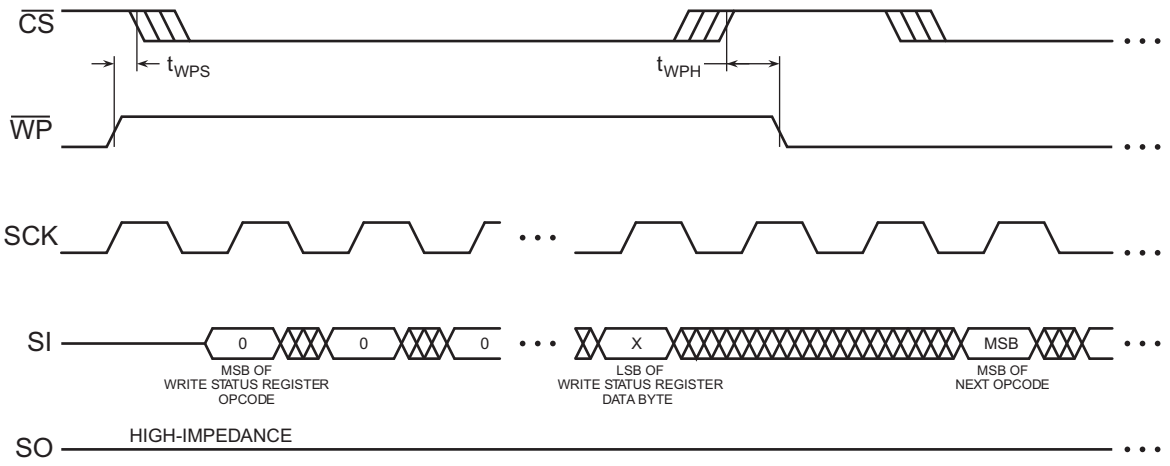

Figure 45. $\overline{WP}$ Timing for Write Status Register Command When BPL = 1

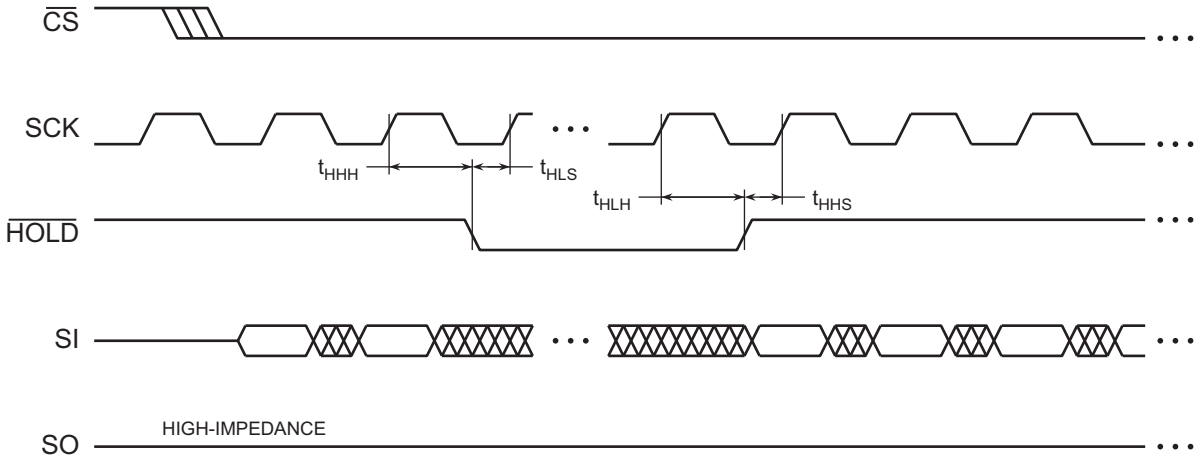

Figure 46. $\overline{HOLD}$ Timing – Serial Input

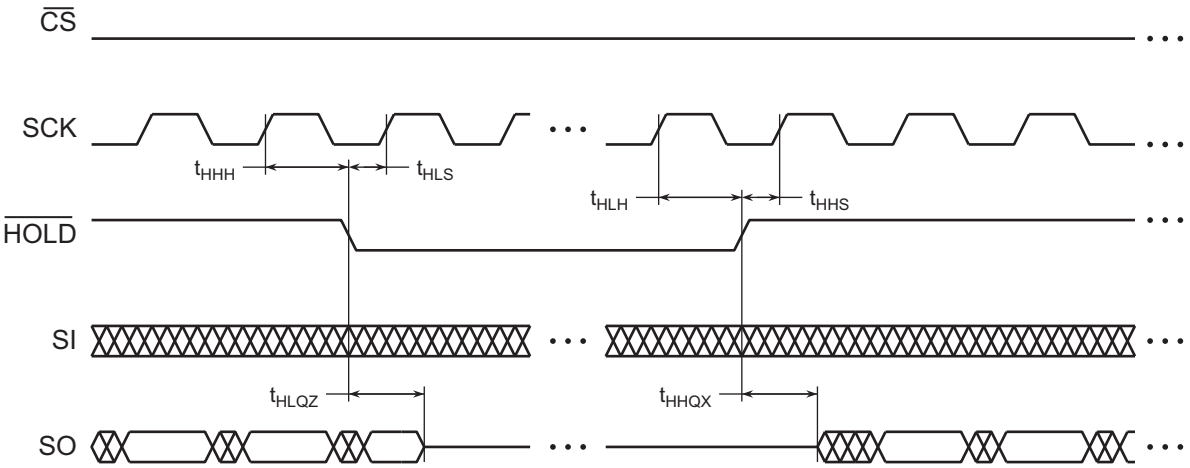

Figure 47. $\overline{HOLD}$ Timing – Serial Output

© 2025 Renesas Electronics

Downloaded from Arrow.com.

15. Ordering Information

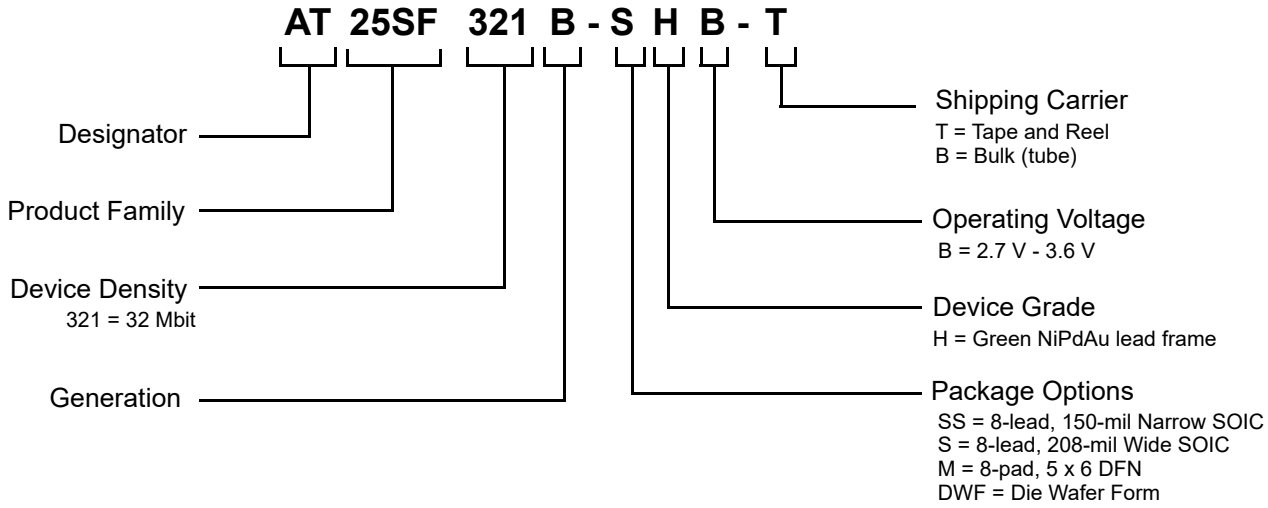

Ordering Code [1]	Package	Operating Voltage	Max. Freq. (MHz)	Operation Range
AT25SF321B-SSHB-B	8-lead, 150-mil Narrow SOIC	2.7 V to 3.6 V	133 MHz	Industrial (-40 °C to +85 °C)
AT25SF321B-SSHB-T				
AT25SF321B-SHB-B	8-lead, 208-mil Wide SOIC			
AT25SF321B-SHB-T				
AT25SF321B-MHB-T	8-pad, 5 x 6 x 0.6mm DFN			
AT25SF321B-DWF [2]	Die Wafer From			

1. The shipping carrier option code is not marked on the devices.
2. Contact Renesas Electronics for detailed information.

© 2025 Renesas Electronics

Downloaded from Arrow.com.

15.1 8-lead, 150-mil Narrow SOIC

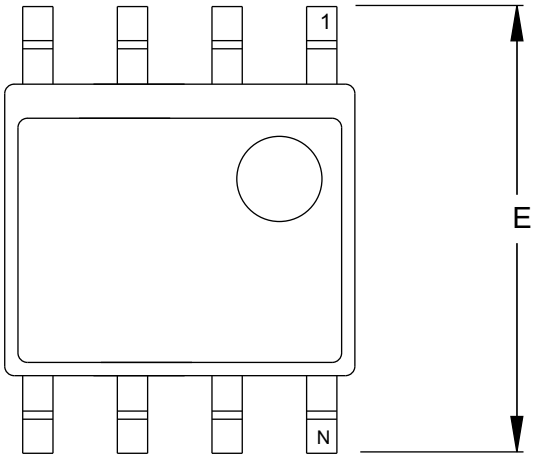

TOP VIEW

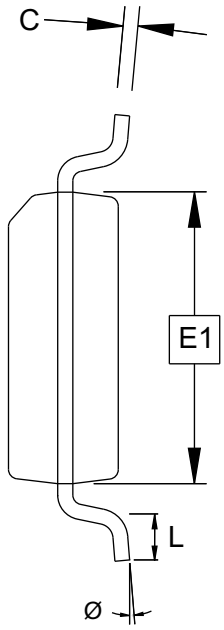

END VIEW

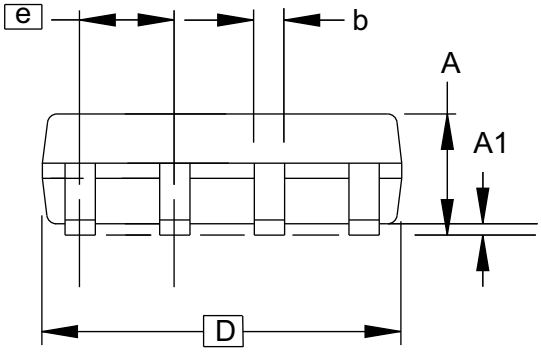

SIDE VIEW

Notes: This drawing is for general information only. Refer to JEDEC Drawing MS-012, Variation AA for proper dimensions, tolerances, datums, etc.

COMMON DIMENSIONS
(Unit of Measure = mm)

SYMBOL	MIN	NOM	MAX	NOTE
A	1.35	1.60	1.75	
A1	0.10	0.18	0.25	
b	0.31	0.43	0.51	
C	0.17	0.22	0.25	
D	4.80	4.83	5.05	
E1	3.81	3.90	3.99	
E	5.79	6.00	6.20	
e	1.27 BSC			
L	0.40	0.60	1.27	
Ø	0°	3.75	8°	

© 2025 Renesas Electronics

Downloaded from Arrow.com.

15.2 8-lead, 208-mil Wide SOIC

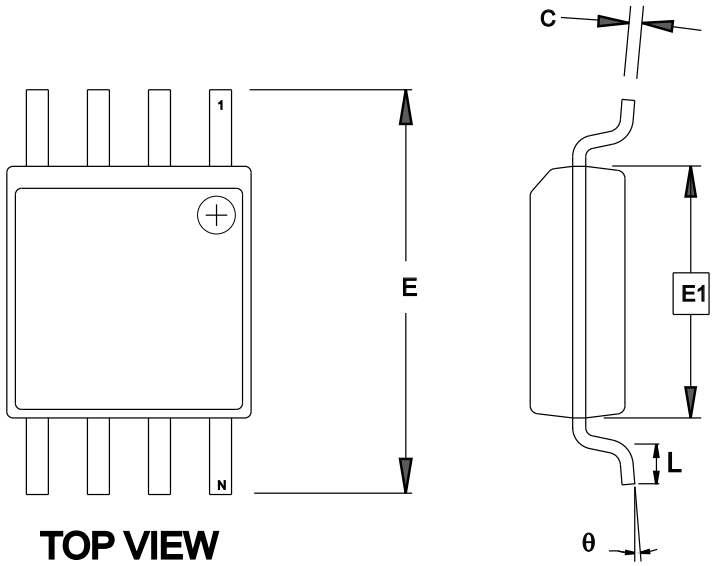

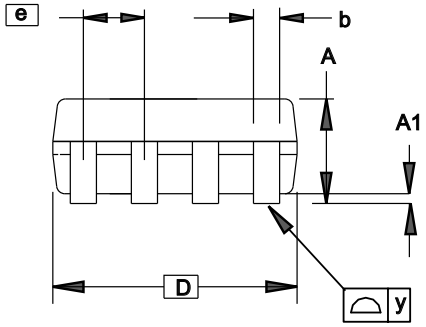

COMMON DIMENSIONS
(Unit of Measure = mm)

SYMBOL	MIN	NOM	MAX	NOTE
A	1.70	1.95	2.16	
A1	0.05	0.15	0.25	
b	0.35	0.42	0.48	4
C	0.15	0.20	0.35	4
D	5.13	5.28	5.38	
E1	5.18	5.23	5.40	2
E	7.70	7.90	8.26	
L	0.50	0.65	0.85	
y	—	—	0.10	5
θ	0°	—	8°	
e	1.27 BSC			3

Notes: 1. This drawing is for general information only; refer to EIAJ Drawing EDR-7320 for additional information.
2. Mismatch of the upper and lower dies and resin burrs aren't included.
3. Determines the true geometric position.
4. Values b,C apply to plated terminal. The standard thickness of the plating layer shall measure between 0.007 to .021 mm.
5. y = coplanarity spec.

© 2025 Renesas Electronics

Downloaded from Arrow.com.

15.3 8-Pad, 5 x 6 x 0.6 mm DFN

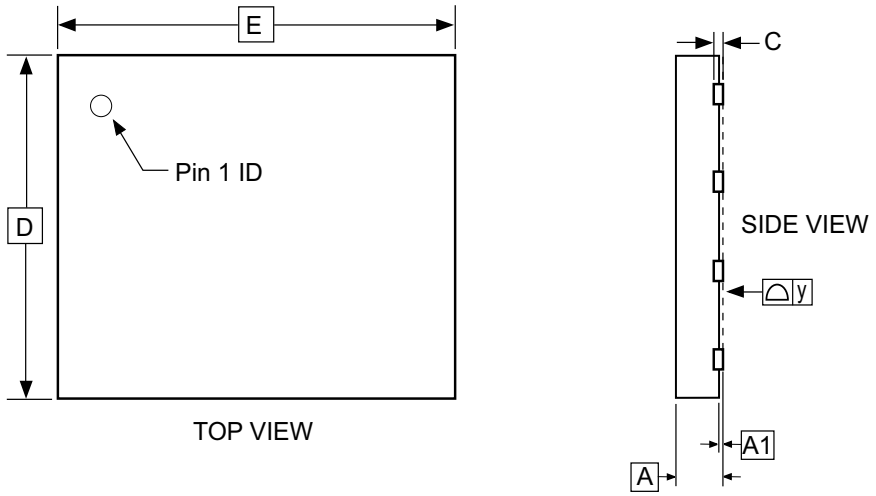

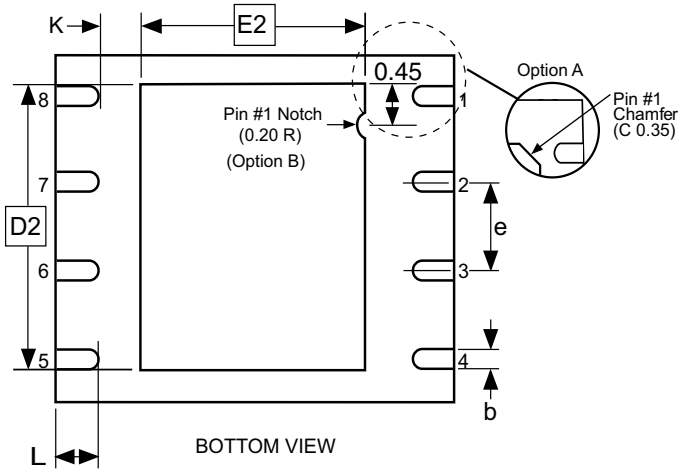

COMMON DIMENSIONS
(Unit of Measure = mm)

SYMBOL	MIN	NOM	MAX	NOTE
A	0.45	0.55	0.60	
A1	0.00	0.02	0.05	
b	0.35	0.40	0.48	
C		0.152 REF		
D	4.90	5.00	5.10	
D2	3.80	4.00	4.20	
E	5.90	6.00	6.10	
E2	3.20	3.40	3.60	
e		1.27		
L	0.50	0.60	0.75	
y	0.00	–	0.08	
K	0.20	–	–	

Notes: 1. This package conforms to JEDEC reference MO-229, Saw Singulation.
2. The terminal #1 ID is a laser-marked feature.
3. The exposed thermal pad is not electrically connected.
4. It is recommended that the exposed thermal pad be tied to system ground to minimize the possibility of EMI related issues. It is also recommended for mechanical stability.

© 2025 Renesas Electronics

Downloaded from Arrow.com.

16. Revision History

Revision Number	Date	Description
A	5/2019	Initial release of AT25SF321B data sheet.
B	6/2019	Revision B of AT25SF321B data sheet. Change maximum frequency from 85 MHz to 108 MHz. Update fclk, fclk1, and fclk2 parameters in Table 12.4. Update maximum frequency in Ordering Code table.
C	01/2020	Changes to Section 6.4, Quad-Output Read Array (6Bh). Addition of three rows to Table 12.5. Added ordering number for Die Wafer Form in Section 15. Inclusion of section 7.5.2 for opcode 77h, section 7.6 for E7h, section 8.2 for 32h, section 9.5 for 66h and 99h, section 10.1 for 4Bh. Changed SEC bit to BP4, and TBB bit to BP3. Complete text edit for grammar, syntax, and consistency.
D	5/2020	Changes to several numbers in Tables 13.3. and 13.6. Addition of notes to Tables 13.3, 13.5, and 13.6. Removed Preliminary from title page.
E	6/2020	Addition of timing diagrams for opcodes 04h, 06h, 75h, 7Ah, and 60h/C7h. In Table 13.3, changed I_{DPD} max spec from 3 µA to 5 µA. Updated the erase times at the end of Section 8.5. Changed resume/suspend numbers on page 25: 2 ms --> 3.5 ms, and 18 ms --> 55 ms.
F	6/2022	Applied new corporate template to document. Added physical block size information in Section 1, Product Overview. Added the following note to the end of the description of opcode 75h: “A read operation from a physical block that includes a suspended area might provide unreliable data. For the definition of the physical block and for the techniques to ensure high data integrity, see application note AN-500.” Changed the description of $\overline{WP}$ and $\overline{HOLD}$ in Table 1.
G	4/2024	Conformed Features List and Section 1 to other SF datasheets. Combined tables in Section 15. Relocated physical block information to Section 4. Changed all instance of ‘WIP’ to ‘RDY/BSY.’ Opcode 75h wording updated. See application note AN-500 for operational guidance. Changed the typ and max values for tBP2 in Section 13.3.
H	8/2024	Updated ‘AC Characteristics - Maximum Clock Frequencies.’ Changed ‘UDFN’ to ‘DFN.’ Updated ‘8-lead, 208-mil Wide EIAJ SOIC’ POD. Added notes to ‘8-Pad 5 x 6 x 0.6 mm DFN.’ Corrected AT25SF321B-SHB-B, AT25SF321B-SHB-T, AT25SF321B-SSHB-B, and AT25SF321B-SSHB-T package descriptions in Ordering Information table. Changed ‘Sector’ to ‘Block.’ Combined ‘Packaging Information’ and ‘Ordering Information’ sections.
I	12/2025	Updated Table 13 ‘Status Register 3 Bit Assignment.’ Added Table 14 ‘DRV1, DRV0.’ Updated Table 19 ‘Manufacturer and Device ID Information.’ Updated Section 12.1 ‘Read Manufacturer and Device ID (9Fh).’ Corrected t_{OH} value in Section 13.3 ‘AC Characteristics - Maximum Clock Frequencies.’

© 2025 Renesas Electronics

Downloaded from Arrow.com.

IMPORTANT NOTICE AND DISCLAIMER

RENESAS ELECTRONICS CORPORATION AND ITS SUBSIDIARIES (“RENESAS”) PROVIDES TECHNICAL SPECIFICATIONS AND RELIABILITY DATA (INCLUDING DATASHEETS), DESIGN RESOURCES (INCLUDING REFERENCE DESIGNS), APPLICATION OR OTHER DESIGN ADVICE, WEB TOOLS, SAFETY INFORMATION, AND OTHER RESOURCES “AS IS” AND WITH ALL FAULTS, AND DISCLAIMS ALL WARRANTIES, EXPRESS OR IMPLIED, INCLUDING, WITHOUT LIMITATION, ANY IMPLIED WARRANTIES OF MERCHANTABILITY, FITNESS FOR A PARTICULAR PURPOSE, OR NON-INFRINGEMENT OF THIRD-PARTY INTELLECTUAL PROPERTY RIGHTS.

These resources are intended for developers who are designing with Renesas products. You are solely responsible for (1) selecting the appropriate products for your application, (2) designing, validating, and testing your application, and (3) ensuring your application meets applicable standards, and any other safety, security, or other requirements. These resources are subject to change without notice. Renesas grants you permission to use these resources only to develop an application that uses Renesas products. Other reproduction or use of these resources is strictly prohibited. No license is granted to any other Renesas intellectual property or to any third-party intellectual property. Renesas disclaims responsibility for, and you will fully indemnify Renesas and its representatives against, any claims, damages, costs, losses, or liabilities arising from your use of these resources. Renesas' products are provided only subject to Renesas' Terms and Conditions of Sale or other applicable terms agreed to in writing. No use of any Renesas resources expands or otherwise alters any applicable warranties or warranty disclaimers for these products.

(Disclaimer Rev.1.01)

Corporate Headquarters

TOYOSU FORESIA, 3-2-24 Toyosu,
Koto-ku, Tokyo 135-0061, Japan
www.renesas.com

Trademarks

Renesas and the Renesas logo are trademarks of Renesas Electronics Corporation. All trademarks and registered trademarks are the property of their respective owners.

Contact Information

For further information on a product, technology, the most up-to-date version of a document, or your nearest sales office, please visit www.renesas.com/contact-us/.

© 2025 Renesas Electronics Corporation. All rights reserved.

Downloaded from Arrow.com.