# PTS525 Series

## Micro Miniature Tactile Switch for SMT 5.2 x 5.2 mm



## Description

The PTS525 series of micro miniature tactile switches for SMT are available in a ruggedized package, in a compact size, with either a 0.8mm or a 1.5mm actuator height. Often found designed into remote controls, instrumentation and various other consumer products, PTS525 switches can withstand harsh environments to keep working for a high number of cycles.

## Features & Benefits

- 0.8 & 1.5 mm actuator height
- Ruggedized package in a compact size
- High number of cycles

## Applications

- Consumer products
- Instrumentation
- Remote controls

### Specifications

| | |
|---|---|
| **Function** | Momentary action |
| **Contact Arrangement** | 1 make contact SPST NO |
| **Packaging** | In reels of 5,000 pieces for 0.8 mm height.<br>In reels of 4.000 pieces for 1.5 height.<br>Dimensions of reels according to EIA 481B.<br>External diameter 330 mm. |

### Electrical Characteristics

| | |
|---|---|
| **Max. Voltage** | 15 VDC |
| **Max. Current DC** | 20 mA |
| **Dielectric Strength** | 250 vA C (1mn) |
| **Contact Resistance** | ≤ 100 mΩ |
| **Insulation Resistance** | ≥ 100 mΩ |
| **Bounce Time** | ≤ 10 ms |

### Environmental Characteristics

| | |
|---|---|
| **Operating Temperature** | -20˚C to 70˚C |

### Process

| | |
|---|---|
| **Soldering** | This component is suited to the following methods:<br>Infrared Reflow Soldering in accordance with IEC61760-1 |

**Notes:**
Specifications listed above are for switches with standard options. For information on specific and custom switches, consult Customer Service Center. The PTS series is not certified for using in Automotive application and no PPAP. However, in the case of some automotive accessories and specific applications for 2 and 3 wheeled vehicles the PTS is widely used and very suitable. Please contact your local representative to discuss your application and the best switch solution.



© 2026 Littelfuse, Inc.
Specifications are subject to change without notice.
Revised: VL 06/09/26

Downloaded from Arrow.com.

# PTS525 Series

## Micro Miniature Tactile Switch for SMT 5.2 x 5.2 mm

### Mechanical Characteristics

| Supply Status | LITTELFUSE Orderable Part Number | Description | Contact & Terminals Plating | Terminals | Ground Pin | Operating Force Fa (Newtons) | Operating Life (Operations) | Electrical Travel (mm) | Product Height from PCB (mm) |
|---|---|---|---|---|---|---|---|---|---|
| ✓ | Y97CT23B2BCFP | PTS525SM08SMTR2 LFS | Silver | Gullwing SMT leads | No | 1.6 +/- 0.5 | 1,000,000 | 0.25 +/- 0.2 | 0.8 |
| ✓ | Y97CT23B2CCFP | PTS525SM15SMTR2 LFS | Silver | Gullwing SMT leads | No | 1.6 +/- 0.5 | 1,000,000 | 0.25 +/- 0.2 | 1.5 |
| ✓ | Y97CT23B5BCFP | PTS525SK08SMTR2 LFS | Silver | Gullwing SMT leads | No | 2.6 +/- 0.5 | 200,000 | 0.25 +/- 0.2 | 0.8 |
| ✓ | Y97CT23B5CCFP | PTS525SK15SMTR2 LFS | Silver | Gullwing SMT leads | No | 2.6 +/- 0.5 | 500,000 | 0.25 +/- 0.2 | 1.5 |
| ✓ | Y97CT23B6CCFP | PTS525SP15SMTR2 LFS | Silver | Gullwing SMT leads | No | 3.2 +/- 1.0 | 50,000 | 0.25 +/- 0.2 | 1.5 |
| ✓ | Y97CT24B2CCFP | PTS525SMG15SMTR2 LFS | Silver | Gullwing SMT leads | Yes | 1.6 +/- 0.5 | 1,000,000 | 0.25 +/- 0.2 | 1.5 |
| ✓ | Y97CT24B5CCFP | PTS525SKG15SMTR2 LFS | Silver | Gullwing SMT leads | Yes | 2.6 +/- 0.5 | 500,000 | 0.25 +/- 0.2 | 1.5 |
| ✓ | Y97CT26B2CCFP | PTS525SMG15JSMTR2 LFS | Silver | J bend leads | Yes | 1.6 +/- 0.5 | 1,000,000 | 0.25 +/- 0.2 | 1.5 |
| ✓ | Y97CT26B5CCFP | PTS525SKG15JSMTR2 LFS | Silver | J bend leads | Yes | 2.6 +/- 0.5 | 500,000 | 0.25 +/- 0.2 | 1.5 |

**Note:**
Supply Status: ✓: Available for ordering
**ORO:** Available On Request Only. Please contact your Littelfuse representative for details.

### Dimensions

#### PTS525 SM08 SMTR2 LFS, PTS525 SK08 SMTR2 LFS

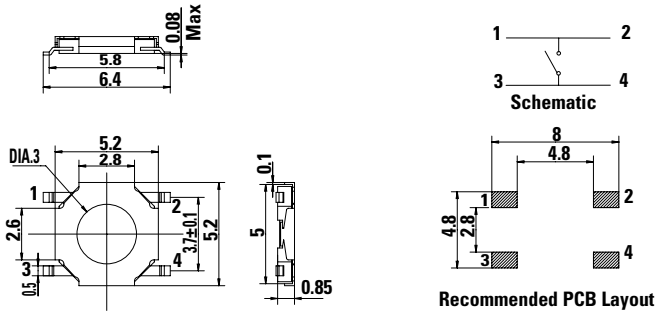


#### PTS525 SM15 SMTR2 LFS, PTS525 SK15 SMTR2 LFS

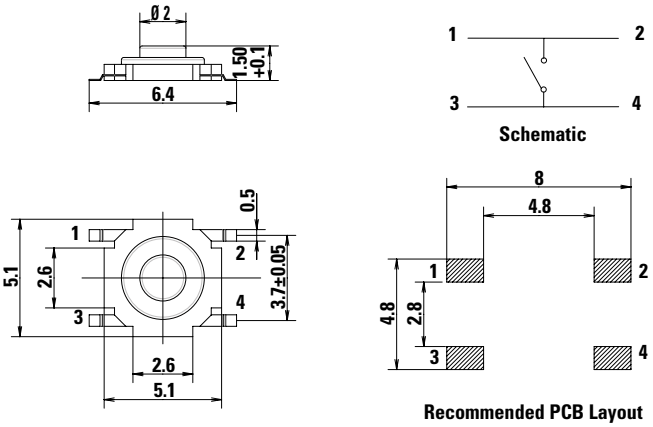


#### PTS525 SMG15 SMTR2 LFS, PTS525 SKG15 SMTR2 LFS

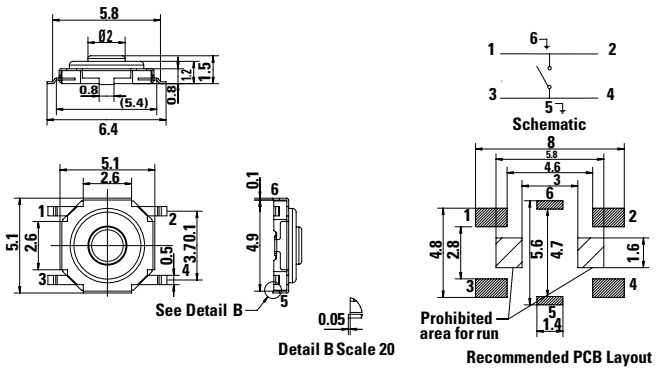


#### PTS525 SMG15J SMTR2 LFS, PTS525 SKG15J SMTR2 LFS

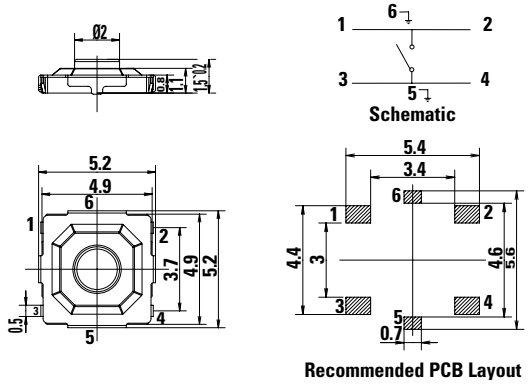




© 2026 Littelfuse, Inc.
Specifications are subject to change without notice.
Revised: VL 06/09/26

Downloaded from Arrow.com.

# PTS525 Series

## Micro Miniature Tactile Switch for SMT 5.2 x 5.2 mm

### Tape & Reel

**0.8 mm Height, 5,000 Pieces per Reel**

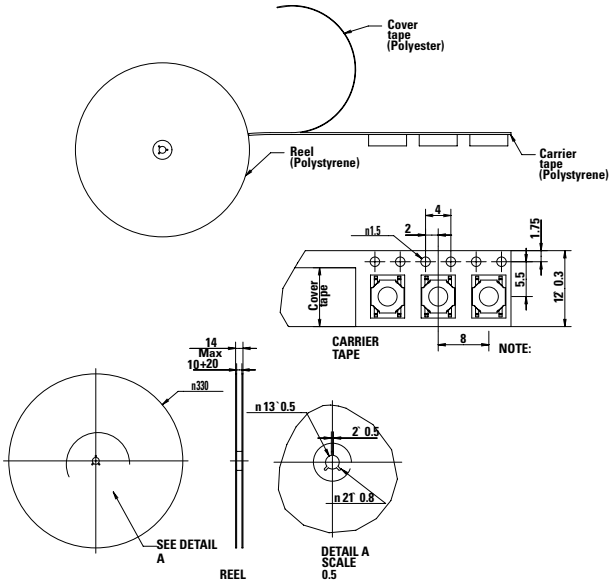


**1.5 mm Height, 4,000 Pieces per Reel**

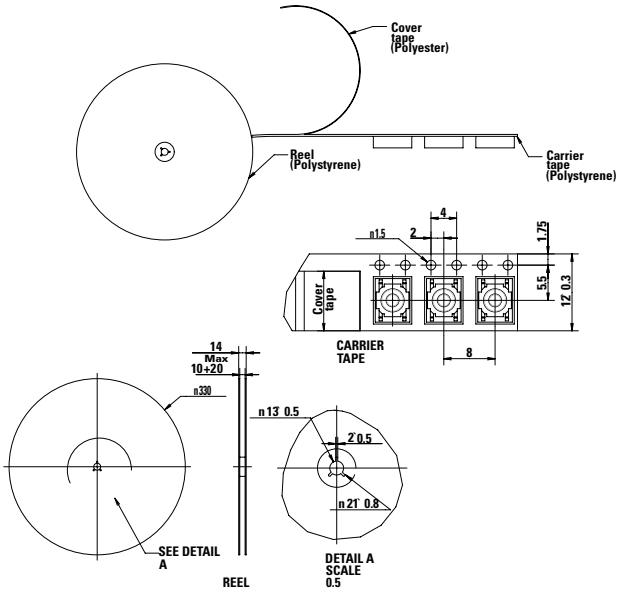


### Ordering Number

Our easy build-a-switch concept allows you to mix and match options to create the switch you need. To order, select desired option from each category and place it in the appropriate box. For any part number different from those listed above, please consult your local representative.

**PTS525 - S - x - x - xx - x - SMTR - LFS**

**Actuator Type**
**S:** Standard

**Actuation Force**
**M:** 160 gf
**K:** 260 gf
**P:** 320 gf

**Ground Pin**
**No digit:** No ground pin
**G:** Ground pin

**Height**
**08:** 0.8 mm height
**15:** 1.5 mm height

**Termination**
**No digit:** Gullwing SMT leads
**J:** J bend leads

**Packaging**
**SMTR2:** Tape & Reel

**LFS:** RoHS, silver plated

**Disclaimer Notice -** Information furnished is believed to be accurate and reliable. However, users should independently evaluate the suitability of and test each product selected for their own applications. Littelfuse products are not designed for, and may not be used in, all applications. Read complete Disclaimer Notice at http://www.littelfuse.com/disclaimer-electronics.



© 2026 Littelfuse, Inc.
Specifications are subject to change without notice.
Revised: VL 06/09/26

Downloaded from Arrow.com.