© 2022 TE Connectivity. All Rights Reserved.

REVISIONS					
P	LTR	DESCRIPTION	DATE	DWN	APVD
	A	INITIAL REVISION	03MAR2022	GN	RM

SECTION A-A

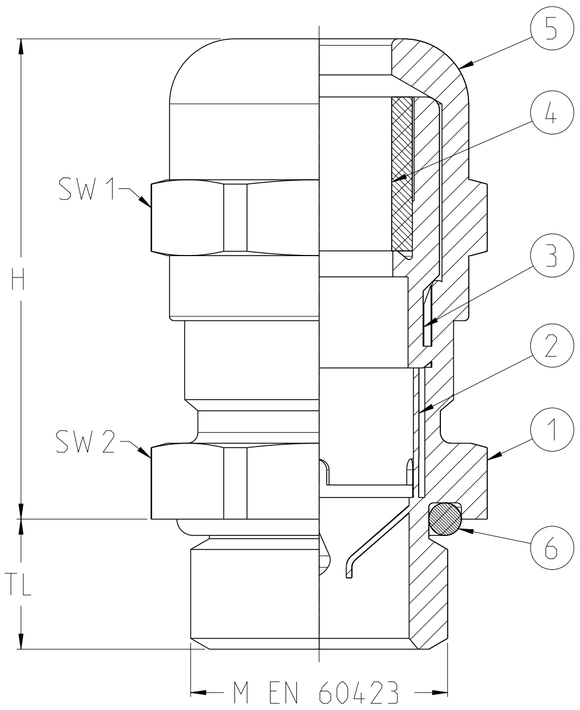

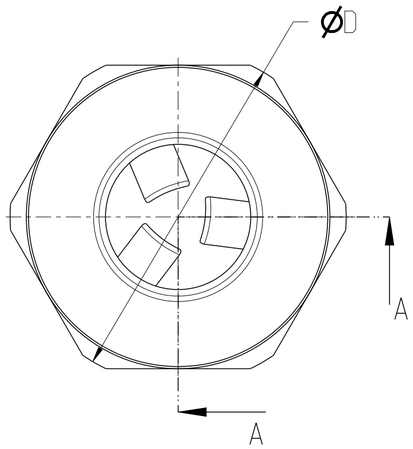

TCPN	TE Product Type (Entrelec)	M EN 60423	TL	H	ØD	SW 1	SW 2	Clamping Range Ø min - max	Shield Diameter Ø min-max
1SNG613001R0000	EM-EMC2-M12-MET-A	M12x1.5	6.0	22.2	15.5	14	14	3.0-6.5	2.5-4.5
1SNG613002R0000	EM-EMC2-M12-MET-B	M12x1.5	12.0	22.2	15.5	14	14	3.0-6.5	2.5-4.5
1SNG613003R0000	EM-EMC2-M16-MET-A	M16x1.5	7.0	23.3	20.0	17	18	4.0-8.0	3.5-6.0
1SNG613004R0000	EM-EMC2-M16-MET-B	M16x1.5	12.0	23.3	20.0	17	18	4.0-8.0	3.5-6.0
1SNG613005R0000	EM-EMC2-M16-MET-C	M16x1.5	6.5	29.4	22.0	20	20	5.0-10.0	4.0-8.0
1SNG613006R0000	EM-EMC2-M20-MET-A	M20x1.5	8.0	24.5	24.5	22	22	6.0-12.0	5.0-10.0
1SNG613007R0000	EM-EMC2-M20-MET-B	M20x1.5	12	24.5	24.5	22	22	6.0-12.0	5.0-10.0
1SNG613008R0000	EM-EMC2-M25-MET-A	M25x1.5	8.0	28.0	30.0	24	27	10.0-14.0	8.5-11.5
1SNG613009R0000	EM-EMC2-M25-MET-B	M25x1.5	12.0	28.0	30.0	24	27	10.0-14.0	8.5-11.5
1SNG613010R0000	EM-EMC2-M25-MET-C	M25x1.5	8.0	37.8	33.0	30	30	13.0-18.0	11.0-14.0
1SNG613011R0000	EM-EMC2-M32-MET-A	M32x1.5	9.0	32.8	37.5	30	34	13.0-18.0	11.0-14.0
1SNG613012R0000	EM-EMC2-M32-MET-B	M32x1.5	15.0	32.8	37.5	30	34	13.0-18.0	11.0-14.0
1SNG613013R0000	EM-EMC2-M32-MET-C	M32x1.5	9.0	44.1	44.5	40	40	18.0-25.0	16.0-20.0
1SNG613014R0000	EM-EMC2-M40-MET-A	M40x1.5	9.0	38.6	48.5	40	43	18.0-25.0	16.0-20.0
1SNG613015R0000	EM-EMC2-M40-MET-B	M40x1.5	15.0	38.6	48.5	40	43	18.0-25.0	16.0-20.0
1SNG613016R0000	EM-EMC2-M40-MET-C	M40x1.5	9.0	52.5	55.5	50	50	22.0-32.0	20.0-27.0
1SNG613017R0000	EM-EMC2-M50-MET-A	M50x1.5	9.0	47.8	61.0	50	55	22.0-32.0	20.0-27.0
1SNG613018R0000	EM-EMC2-M50-MET-B	M50x1.5	15.0	47.8	61.0	50	55	22.0-32.0	20.0-27.0
1SNG613019R0000	EM-EMC2-M63-MET-A	M63x1.5	14.0	52.8	75.0	64	68	34.0-44.0	31.0-40.0
1SNG613020R0000	EM-EMC2-M63-MET-B	M63x1.5	18.0	52.8	75.0	64	68	34.0-44.0	31.0-40.0

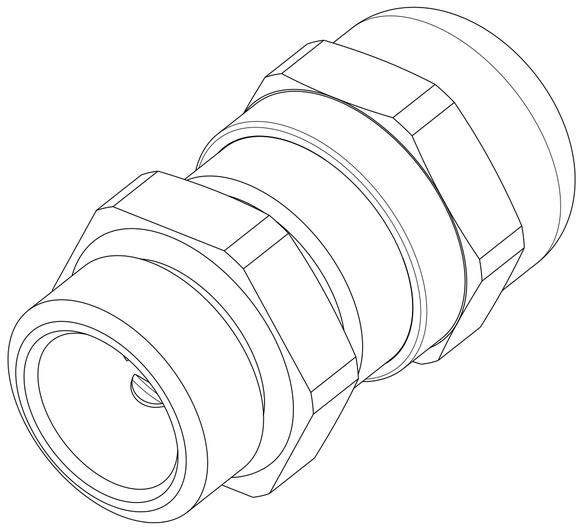

RPT	QTY	DOC TITLE	DRAWING NUMBER	MATERIAL	COMMENTS
6	1	O-RING	-	NBR	-
5	1	METAL GLAND CAP	-	Brass (Nickel Plated)	-
4	1	SEAL	-	CR	-
3	1	PLASTIC INSERT	-	PA6 V2	-
2	1	SPRING FOR EMC	-	CuBe (Tin Plated)	-
1	1	METAL GLAND BODY	-	Brass (Nickel plated)	-

THIS DRAWING IS A CONTROLLED DOCUMENT.

DWN 03MAR2022 N Hunashikatti, Girish
CHK 03MAR2022 Rajan n, Kasi
APVD 03MAR2022 Rafeeq, Mohd

TE Connectivity

DIMENSIONS: mm

TOLERANCES UNLESS OTHERWISE SPECIFIED:
0 PLC ±
1 PLC ±1
2 PLC ±1
3 PLC ±1
4 PLC ±1
ANGLES ±

PRODUCT SPEC: M-EMC2-GLAND
APPLICATION SPEC: -
WEIGHT: -

NAME: - M-EMC2-GLAND -

MATERIAL: REF, TABLE -
FINISH: REF, TABLE -

SIZE	CAGE CODE	DRAWING NO	RESTRICTED TO
A2	00779	C-1SNP061361-0100	-

CUSTOMER DRAWING

SCALE 5:1 SHEET 1 OF 1 REV A

Downloaded from Arrow.com.