REVISIONS			
REV	DESCRIPTION	DATE	APPROVED
02_1	REVISED	7/18/97	7/25/97
C	PER EC 0S14-0146-02	GV 18DEC01	JGH

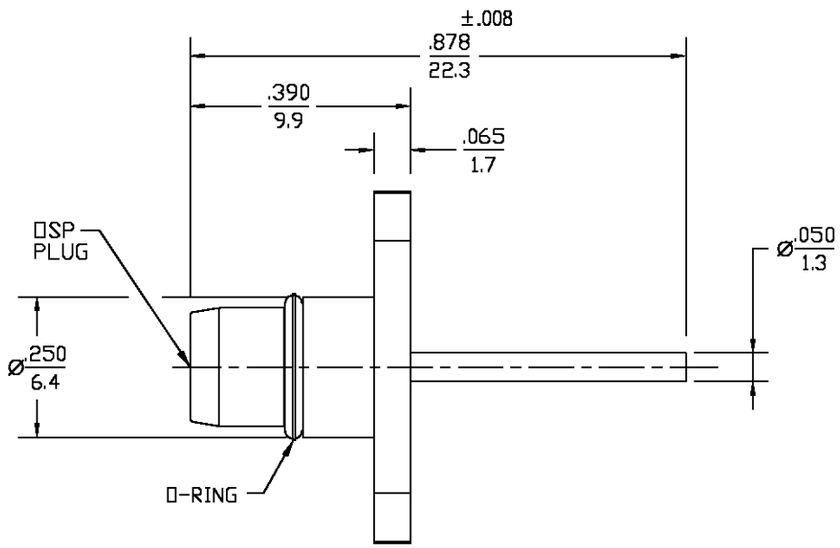

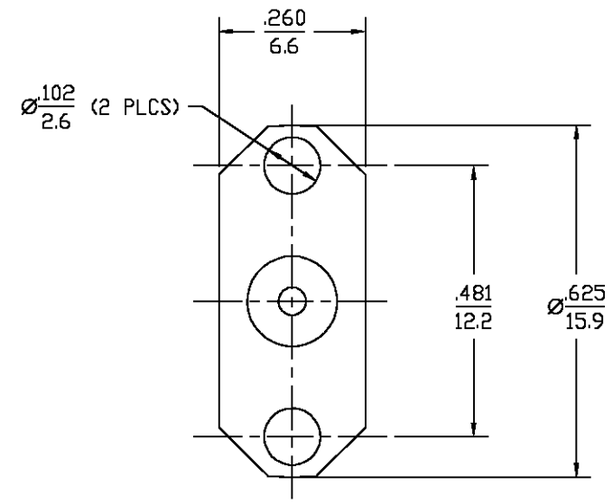

ELECTRICAL	
Nominal Impedance (Ohms)	50
Frequency Range (GHz) DC to	18
Volt Rating (VRMS MAX)	
@ Sea Level	500
VSWR 1.05+.005f(GHz) DC to 18 GHz	
Insertion Loss (dB MAX) .03x $\sqrt{f(GHz)}$	
RF Leakage (dB MIN)	
(Fully Mated)	-(60-f(GHz))
Corona, 70,000 Ft (VRMS MIN)	335
Dielectric Withstanding Voltage	
(VRMS MIN) @ Sea Level	1000
Contact Resistance (Milliohms MAX)	
Center Contact	2.0
Outer Contact	2.0
RF High Potential @ Sea Level	
(VRMS MIN @ 5 MHz)	1000
I.R.(Megohms MIN)	5000

MECHANICAL	
Interface Dimensions	
MIL-STD-348A FIG. 321-1	
Force to Engage (In-Lbs MAX)	3
& Disengage (In-Lbs MAX)	1.5
Center Contact Captivation	
Axial (Lbs)	6.0
Weight (Grams)	TBD

ENVIRONMENTAL	
TEMPERATURE RATING	-65° TO +125°C
Vibration MIL-STD-202, Method	
204, Condition D	
Shock MIL-STD-202, Method 213,	
Condition I	
Thermal Shock MIL-STD-202,	
Method 107, Condition B	
Moisture Resistance MIL-STD-202,	
Method 106	
Corrosion - MIL-STD-202, Method	
101, Condition B	

.XXX = in
XX.X = mm (REF)

COMPONENT	MATERIAL	FINISH
HOUSING	STAINLESS STEEL PER ASTM-A484 AND ASTM-A582, TYPE 303	PASSIVATE PER QQ-P-35
DIELECTRIC	PTFE FLUOROCARBON PER ASTM-D-1457	N/A
CENTER CONTACT	BRASS PER ASTM B 16	GOLD PLATE PER MIL-G-45204
O-RING	FLOUROSILICONE PER MIL-R-25988, CLASS 1, TYPE 1	N/A

UNLESS OTHERWISE SPECIFIED DIMENSIONS ARE IN INCHES TOLERANCE ON

FRAC.	DEC.	ANGLES
± 1/64	±.005	± 1°

DRAWN BY KCM	DATE 2/29/88	
CHECKED BY MH/M	3/14/88	
APP'D BY DC	3/14/88	

AMP

AMP Incorporated
140 Fourth Avenue
Waltham, MA 02451-7599

These drawings and specifications are the property of M/A-COM Incorporated and shall not be reproduced or copied or used in whole or in part as the basis for the manufacture or sale of item(s) without written permission.

USE ASS'Y PROCEDURE

NO. A.P. N/A

TITLE
OSP 2 HOLE FLANGE MOUNT PLUG RECEPTACLE STRAIGHT TERMINAL

SIZE	CODE IDENT NO.		REV
B	26805	4551-5021-02	02_1

SCALE 4:1 | SHEET 1 OF 1

CUSTOMER DRAWING

AMP PART # 1058574-1
SHEET 1 OF 1 REV C

Downloaded from Arrow.com.