CHASSIS MOUNT POWER TRANSFORMERS

TransGlobal® Transformers

Style NV



Style S



RoHS

Designed for single input and single output use only, and requires simultaneous use of all windings.

Sec.	STANCOR PART NUMBER	Primary Voltage	VA	Secondary RMS Rating Series Volts	Series Amps	Parallel Volts	Parallel Amps	Style	DIMENSIONS-INCHES H	W	D	MW	MD	C	Q.C.	Weight (lbs.)	Agency* Certif.
A	TGC25-10	115/230	25	10.0 C.T. @	2.50	5.0 @	5.00	S	2.38	2.81	1.94	2.38	-	0.31	.187	1.3	† ‡
	TGC43-10	115/230	43	10.0 C.T. @	4.30	5.0 @	8.60	S	2.75	3.25	1.94	2.81	-	0.31	.187	1.8	† ‡
	TGC80-10	115/230	80	10.0 C.T. @	8.00	5.0 @	16.00	NV	3.00	2.50	2.38	2.00	2.19	0.31	.187	2.9	† ‡
	TGC130-10	115/230	130	10.0 C.T. @	13.00	5.0 @	26.00	NV	3.38	2.81	2.88	2.25	2.50	0.38	.250	4.5	†
	TGC175-10	115/230	175	10.0 C.T. @	17.50	5.0 @	35.00	NV	3.75	3.13	2.88	2.50	2.50	0.38	.250	5.6	†
B	TGC25-12	115/230	25	12.6 C.T. @	2.00	6.3 @	4.00	S	2.38	2.81	1.94	2.38	-	0.31	.187	1.3	† ‡
	TGC43-12	115/230	43	12.6 C.T. @	3.40	6.3 @	6.80	S	2.75	3.25	1.94	2.81	-	0.31	.187	1.8	† ‡
	TGC80-12	115/230	80	12.6 C.T. @	6.30	6.3 @	12.60	NV	3.00	2.50	2.38	2.00	2.19	0.31	.187	2.9	† ‡
	TGC130-12	115/230	130	12.6 C.T. @	10.30	6.3 @	20.60	NV	3.38	2.81	2.88	2.25	2.50	0.38	.250	4.5	†
	TGC175-12	115/230	175	12.6 C.T. @	14.00	6.3 @	28.00	NV	3.75	3.13	2.88	2.50	2.50	0.38	.250	5.6	†
C	TGC25-16	115/230	25	16.0 C.T. @	1.60	8.0 @	3.20	S	2.38	2.81	1.94	2.38	-	0.31	.187	1.3	† ‡
	TGC43-16	115/230	43	16.0 C.T. @	2.70	8.0 @	5.40	S	2.75	3.25	1.94	2.81	-	0.31	.187	1.8	† ‡
	TGC80-16	115/230	80	16.0 C.T. @	5.00	8.0 @	10.00	NV	3.00	2.50	2.38	2.00	2.19	0.31	.187	2.9	† ‡
	TGC130-16	115/230	130	16.0 C.T. @	8.10	8.0 @	16.20	NV	3.38	2.81	2.88	2.25	2.50	0.38	.250	4.5	†
	TGC175-16	115/230	175	16.0 C.T. @	11.00	8.0 @	22.00	NV	3.75	3.13	2.88	2.50	2.50	0.38	.250	5.6	†
D	TGC25-20	115/230	25	20.0 C.T. @	1.25	10.0 @	2.50	S	2.38	2.81	1.94	2.38	-	0.31	.187	1.3	† ‡
	TGC43-20	115/230	43	20.0 C.T. @	2.20	10.0 @	4.40	S	2.75	3.25	1.94	2.81	-	0.31	.187	1.8	† ‡
	TGC80-20	115/230	80	20.0 C.T. @	4.00	10.0 @	8.00	NV	3.00	2.50	2.38	2.00	2.19	0.31	.187	2.9	† ‡
	TGC130-20	115/230	130	20.0 C.T. @	6.50	10.0 @	13.00	NV	3.38	2.81	2.88	2.25	2.50	0.38	.250	4.5	†
	TGC175-20	115/230	175	20.0 C.T. @	8.80	10.0 @	17.60	NV	3.75	3.13	2.88	2.50	2.50	0.38	.250	5.6	†
E	TGC25-24	115/230	25	24.0 C.T. @	1.00	12.0 @	2.00	S	2.38	2.81	1.94	2.38	-	0.31	.187	1.3	† ‡
	TGC43-24	115/230	43	24.0 C.T. @	1.80	12.0 @	3.60	S	2.75	3.25	1.94	2.81	-	0.31	.187	1.8	† ‡
	TGC80-24	115/230	80	24.0 C.T. @	3.30	12.0 @	6.60	NV	3.00	2.50	2.38	2.00	2.19	0.31	.187	2.9	† ‡
	TGC130-24	115/230	130	24.0 C.T. @	5.40	12.0 @	10.80	NV	3.38	2.81	2.88	2.25	2.50	0.38	.250	4.5	†
	TGC175-24	115/230	175	24.0 C.T. @	7.30	12.0 @	14.60	NV	3.75	3.13	2.88	2.50	2.50	0.38	.250	5.6	†
F	TGC25-28	115/230	25	28.0 C.T. @	0.90	14.0 @	1.80	S	2.38	2.81	1.94	2.38	-	0.31	.187	1.3	† ‡
	TGC43-28	115/230	43	28.0 C.T. @	1.50	14.0 @	3.00	S	2.75	3.25	1.94	2.81	-	0.31	.187	1.8	† ‡
	TGC80-28	115/230	80	28.0 C.T. @	2.80	14.0 @	5.60	NV	3.00	2.50	2.38	2.00	2.19	0.31	.187	2.9	† ‡
	TGC130-28	115/230	130	28.0 C.T. @	4.60	14.0 @	9.20	NV	3.38	2.81	2.88	2.25	2.50	0.38	.250	4.5	†
	TGC175-28	115/230	175	28.0 C.T. @	6.25	14.0 @	12.50	NV	3.75	3.13	2.88	2.50	2.50	0.38	.250	5.6	†
G	TGC25-36	115/230	25	36.0 C.T. @	0.70	18.0 @	1.40	S	2.38	2.81	1.94	2.38	-	0.31	.187	1.3	† ‡
	TGC43-36	115/230	43	36.0 C.T. @	1.20	18.0 @	2.40	S	2.75	3.25	1.94	2.81	-	0.31	.187	1.8	† ‡
	TGC80-36	115/230	80	36.0 C.T. @	2.20	18.0 @	4.40	NV	3.00	2.50	2.38	2.00	2.19	0.31	.187	2.9	† ‡
	TGC130-36	115/230	130	36.0 C.T. @	3.60	18.0 @	7.20	NV	3.38	2.81	2.88	2.25	2.50	0.38	.250	4.5	†
	TGC175-36	115/230	175	36.0 C.T. @	4.80	18.0 @	9.60	NV	3.75	3.13	2.88	2.50	2.50	0.38	.250	5.6	†
H	TGC25-230	115/230	25	230.0 C.T. @	0.11	115.0 @	0.22	S	2.38	2.81	1.94	2.38	-	0.31	.187	1.3	‡
	TGC43-230	115/230	43	230.0 C.T. @	0.19	115.0 @	0.38	S	2.75	3.25	1.94	2.81	-	0.31	.187	1.8	‡
	TGC80-230	115/230	80	230.0 C.T. @	0.35	115.0 @	0.70	NV	3.00	2.50	2.38	2.00	2.19	0.31	.187	2.9	‡
	TGC130-230	115/230	130	230.0 C.T. @	0.57	115.0 @	1.14	NV	3.38	2.81	2.88	2.25	2.50	0.38	.250	4.5	
	TGC175-230	115/230	175	230.0 C.T. @	0.76	115.0 @	1.52	NV	3.75	3.13	2.88	2.50	2.50	0.38	.250	5.6	

✳ Agency Certification Note: UL recognized component for use in the US and Canada
TUV certified to EN61588 (Report #DI 401341)

† TUV CE ‡ c UL us

For outline drawings refer to page 15.

Downloaded from Arrow.com.

TransGlobal Transformers

Style S
TGC25, TGC43

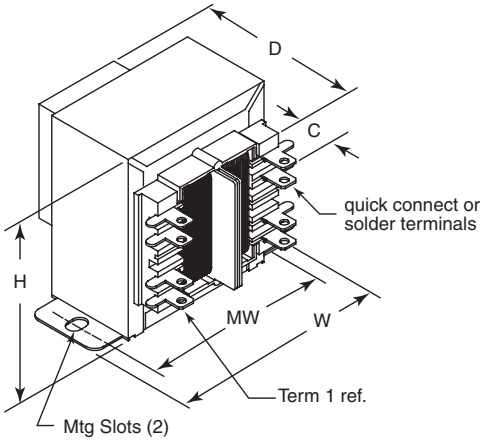

Style NV
TGC80, TGC130, TGC175

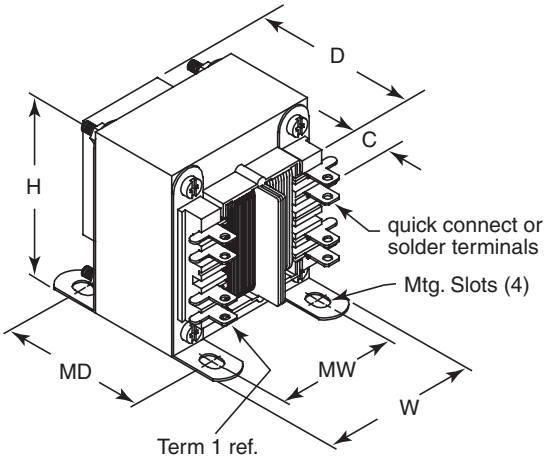

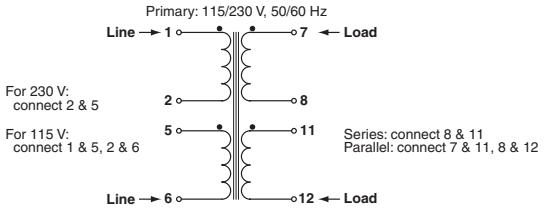

Schematic Diagram

"Side-Winder" Transformers

"Side-Winder"
SWC/DSWC Series

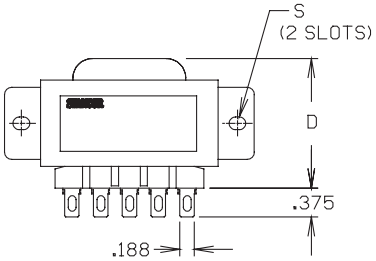

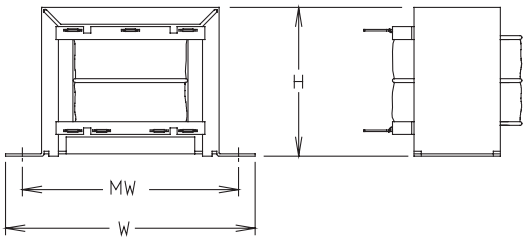

SWC-3, 4, 5

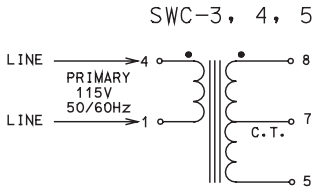

SWC-6, 7, 8

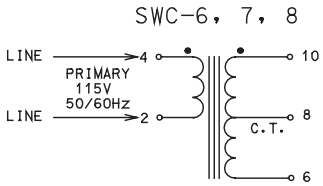

DSWC-4, 5

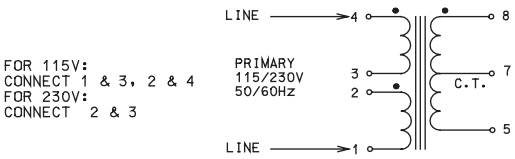

DSWC-6, 7

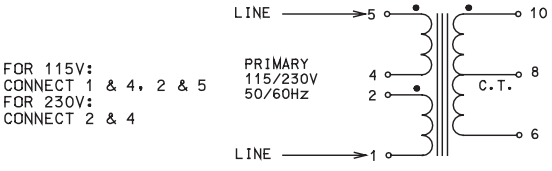

Downloaded from Arrow.com.