Downloaded from Arrow.com.

MATERIAL AND FINISH:
Insulator: Polycarbonate, UL-94V-0 rated
Contacts: Brass, Nickel plated

ELECTRICAL SPECIFICATIONS:
Current rating: 10 A
Voltage rating: 250 VAC
Current rating: 15 A
Voltage rating: 250 VAC

ORDERING CODE:
42R03-8 __ 2 __
1 2

1) COLOR
1 = BLACK
2 = GRAY

2) ELECTRICAL CIRCUIT CONFIGURATION

1 = 15A 250V 120°C 2+GROUND

2 = 15A 250V 70°C 2+GROUND

4 = 15A 250V 70°C 2 POLE

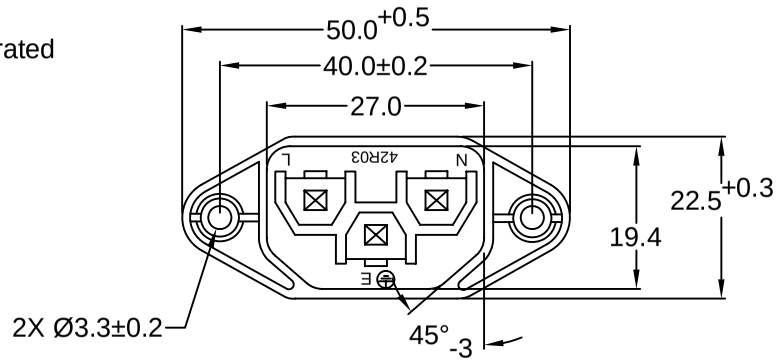

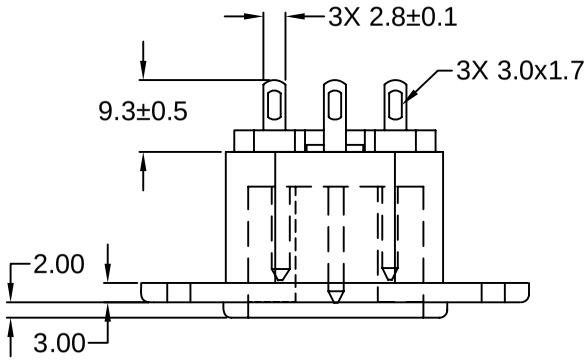

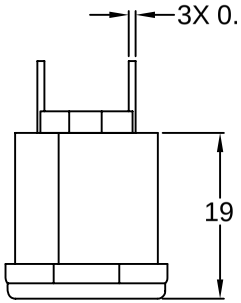

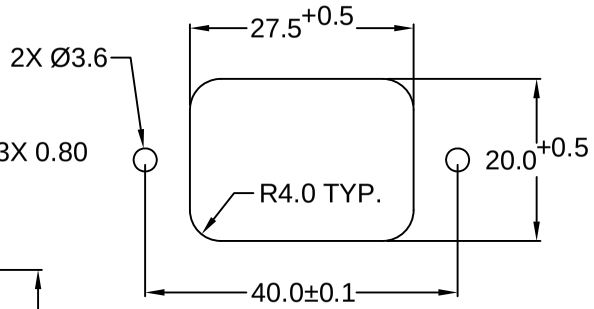

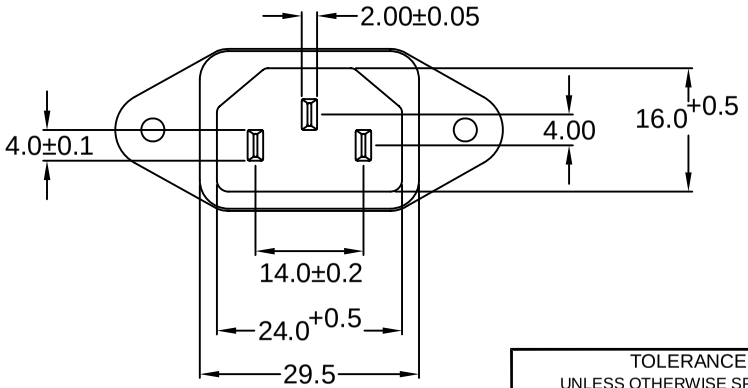

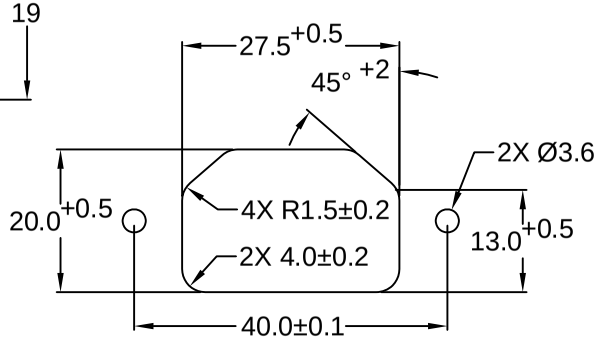

RECOMMENDED PANEL CUTOUT

RoHS COMPLIANT

REVISIONS					
REV	DATE	CHANGE	CHNG	CHCK	APPR
A	1/8/10	TERM. DIM.	PB		

TOLERANCE
UNLESS OTHERWISE SPECIFIED
X ± 1
X.X ± 0.4
X.XX ± 0.20

DRAWN BY	GQ	DATE:	08/17/01
CHECK BY	TD	DATE:	08/20/01
APPR BY	PB	DATE:	08/21/01

Power Dynamics, Inc.
Phone: 973 560-0019 Whippany, New Jersey Fax: 973 560-0076

PART: IEC 60320 C14 APPL. INLET; SOLDER TERMINALS; SIDE FLANGE

PART #: 42R03-8X2X

SHEET 1 of 1

SIZE: A

SCALE: NTS

ALL DIMENSIONS FOR REFERENCE ONLY
DIMENSIONS ARE IN MILLIMETERS

REV: A