Connecting Cables for Connector-Terminal Block Conversion Units (Shielded)

XW2Z

CSM_XW2Z_DS_E_5_7

Connect Connector-Terminal Block Conversion Units (XW2□) to I/O Units for Programmable Controllers with one touch.

Shielded

Ratings and Specifications

Rated current	1 A
Rated voltage	125 VAC 30 VDC
Contact resistance	20 mΩ max. (at 20 mV, 100 mA max.) *1
Insulation resistance	100 MΩ min. (at 500 VDC)
Dielectric strength	500 VAC for 1 min (leakage current: 1 mA max.) *2
Ambient operating temperature	-20 to +75°C (with no condensation or icing) *3

Note: This cable is for fixed parts. Do not use it for moving parts.
*1. Contact resistance for the Connector.
*2. Dielectric strength for the Connector.
*3. However, when bending the cable to perform wiring, maintenance, and other work, do so within the temperature range of 0 to 75°C in consideration of severing of the cable.

Ordering Information

FCN 24-pin - MIL 20-pin, Straight Wiring

XW2Z-□□□A

Appearance	Cable length L (m) *	Model	Sheath outer diameter (mm)/ Minimum bending radius (mm)
	0.5	**XW2Z-050A**	7.8 dia./R63
	1.0	**XW2Z-100A**	
	1.5	**XW2Z-150A**	
	2.0	**XW2Z-200A**	
	3.0	**XW2Z-300A**	
	5.0	**XW2Z-500A**	
	10.0	**XW2Z-010A**	
	15.0	**XW2Z-15MA**	
	20.0	**XW2Z-20MA**	

*Cable length L (m)

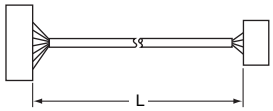

Wiring Diagram

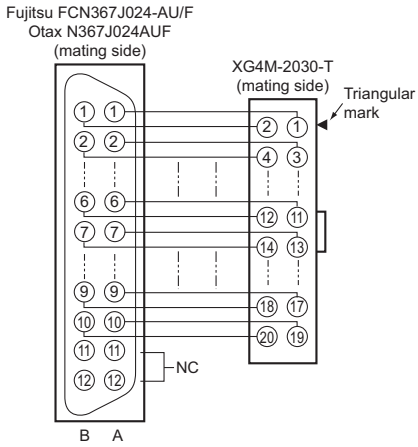

Downloaded from Arrow.com.

FCN 40-pin - MIL 40-pin, Straight Wiring

XW2Z-□□□B

Appearance	Type	Cable length L (m) *	Model	Sheath outer diameter (mm)/ Minimum bending radius (mm)
	Straight wiring	0.5	**XW2Z-050B**	10.4 dia./R84
		1.0	**XW2Z-100B**	
		1.5	**XW2Z-150B**	
		2.0	**XW2Z-200B**	
		3.0	**XW2Z-300B**	
		5.0	**XW2Z-500B**	
		10.0	**XW2Z-010B**	
		15.0	**XW2Z-15MB**	
		20.0	**XW2Z-20MB**	
	Reverse wiring	0.5	**XW2Z-050B-R1**	
		1.0	**XW2Z-100B-R1**	
		1.5	**XW2Z-150B-R1**	
		2.0	**XW2Z-200B-R1**	
		3.0	**XW2Z-300B-R1**	
		5.0	**XW2Z-500B-R1**	

*Cable length L (m)

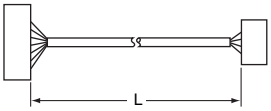

Wiring Diagram

- **Straight wiring**

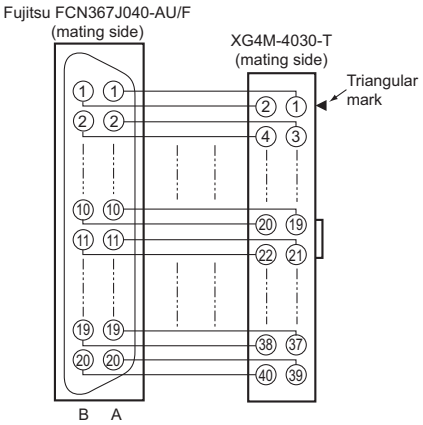

- **Reverse wiring**

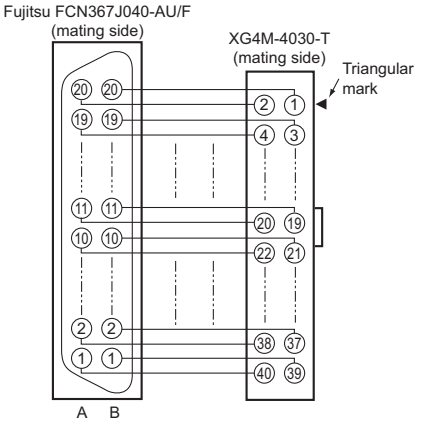

XW2Z-□□□B-A

Appearance	Type	Cable length L (m) *	Model	Sheath outer diameter (mm)/ Minimum bending radius (mm)
	Straight wiring	1.0	**XW2Z-100B-A**	10.4 dia./R84
		1.5	**XW2Z-150B-A**	
		2.0	**XW2Z-200B-A**	
		3.0	**XW2Z-300B-A**	
		5.0	**XW2Z-500B-A**	

Wiring Diagram

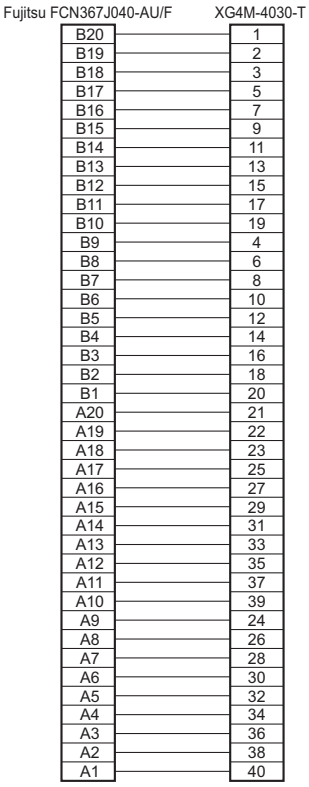

Downloaded from Arrow.com.

FCN 40-pin - MIL 20-pin, MIL 20-pin

XW2Z-□□□D

Appearance	Cable length L (m) *		Model	Sheath outer diameter (mm)/ Minimum bending radius (mm)
	Ⓐ	Ⓑ		
	1.0	0.75	**XW2Z-100D**	10.4 dia./R84
	1.5	1.25	**XW2Z-150D**	
	2.0	1.75	**XW2Z-200D**	
	3.0	2.75	**XW2Z-300D**	
	5.0	4.75	**XW2Z-500D**	
	10.0	9.75	**XW2Z-010D**	
	15.0	14.75	**XW2Z-15MD**	
	20.0	19.75	**XW2Z-20MD**	

*Cable length L (m)

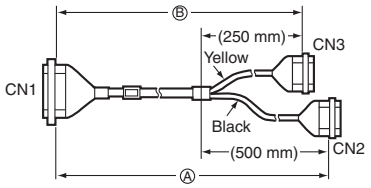

Wiring Diagram

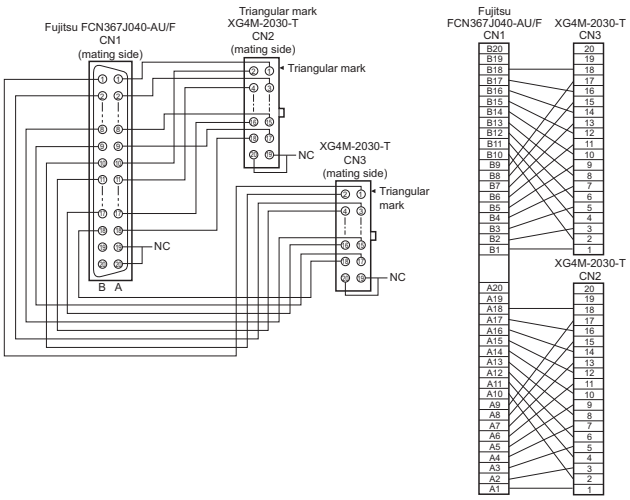

Note: XW2Z-R Cables for I/O Relay Terminals have different wiring and cannot be used with the XW2C.

MIL 34-pin - MIL 34-pin, Straight Wiring

XW2Z-□□□EE

Appearance	Cable length L (m) *	Model	Sheath outer diameter (mm)/ Minimum bending radius (mm)
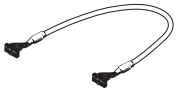	0.5	**XW2Z-050EE**	9.8 dia./R79
	1	**XW2Z-100EE**	
	1.5	**XW2Z-150EE**	
	2	**XW2Z-200EE**	
	3	**XW2Z-300EE**	
	5	**XW2Z-500EE**	

*Cable length L (m)

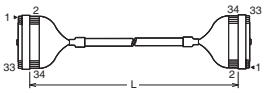

Wiring Diagram

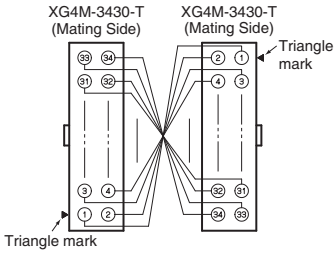

Note: Wire the pins 1:1 so that the Connector pin numbers match.

Downloaded from Arrow.com.

MIL 20-pin - Discrete-wire Press-fit Terminals

XW2Z-□□□F

Appearance	Cable length L (m) *	Model	Sheath outer diameter (mm)/ Minimum bending radius (mm)
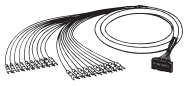	1.0	**XW2Z-100F**	7.8 dia./R63
	1.5	**XW2Z-150F**	
	2.0	**XW2Z-200F**	
	3.0	**XW2Z-300F**	
	5.0	**XW2Z-500F**	
	10.0	**XW2Z-010F**	
	15.0	**XW2Z-15MF**	
	20.0	**XW2Z-20MF**	

*Cable length L (m)

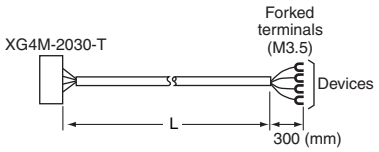

Wiring Diagram

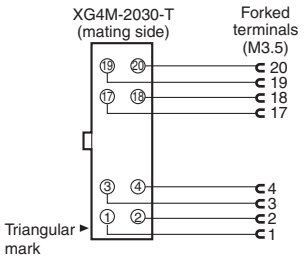

Connector Pin No. Table

Forked terminal	No. of cores	Insulation color	Dot marks	Dot color	Connector pin No.
1	1	Blue	□	Red	1◁
2		Blue	□	Black	2
3	2	Pink	□	Red	3
4		Pink	□	Black	4
5	3	Green	□	Red	5
6		Green	□	Black	6
7	4	Orange	□	Red	7
8		Orange	□	Black	8
9	5	Gray	□	Red	9
10		Gray	□	Black	10
11	6	Blue	□□	Red	11
12		Blue	□□	Black	12
13	7	Pink	□□	Red	13
14		Pink	□□	Black	14
15	8	Green	□□	Red	15
16		Green	□□	Black	16
17	9	Orange	□□	Red	17
18		Orange	□□	Black	18
19	10	Gray	□□	Red	19
20		Gray	□□	Black	20

Downloaded from Arrow.com.

FCN 56-pin - MIL 60-pin

XW2Z-□□□H-1 (For CS1-series I/O Unit Connection)

Appearance	Special Connecting Cables *		Sheath outer diameter (mm)/ Minimum bending radius (mm)
	Cable length L (m)	Model	
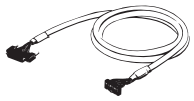	0.5	**XW2Z-050H-1**	12.1 dia./R99
	1.0	**XW2Z-100H-1**	
	1.5	**XW2Z-150H-1**	
	2.0	**XW2Z-200H-1**	
	3.0	**XW2Z-300H-1**	
	5.0	**XW2Z-500H-1**	
	7.0	**XW2Z-700H-1**	
	10.0	**XW2Z-010H-1**	
	1.0	**XW2Z-100H-1G**	

*Cable length L (m)

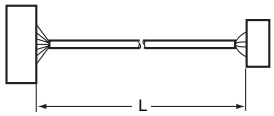

*Up to two cables required for each Programmable Controller I/O Unit.
Note: CS1 signal names connected to the XW2D are different for the XW2Z-□□□H-□ and the XW2Z-□□□H-□G.
Refer to the *I/O Signal Tables* on page 6.

FCN 56-pin - MIL 20-pin, MIL 40-pin

XW2Z-□□□H-2 (For CS1-series I/O Unit Connection)

Appearance	Special Connecting Cables *			Sheath outer diameter (mm)/ Minimum bending radius (mm)
	Cable length L (m)		Model	
	Ⓐ	Ⓑ		
	1.0	0.75	**XW2Z-100H-2**	12.1 dia./R99
	1.5	1.25	**XW2Z-150H-2**	
	2.0	1.75	**XW2Z-200H-2**	
	3.0	2.75	**XW2Z-300H-2**	
	5.0	4.75	**XW2Z-500H-2**	
	10.0	9.75	**XW2Z-010H-2**	
	1.0	0.75	**XW2Z-100H-2G**	
	3.0	2.75	**XW2Z-300H-2G**	
	5.0	4.75	**XW2Z-500H-2G**	

*Cable length L (m)

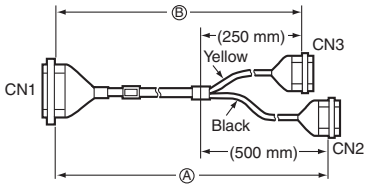

Linear lengths (not including bends)

*Up to two cables required for each Programmable Controller I/O Unit.
Note: CS1 signal names connected to the XW2D are different for the XW2Z-□□□H-□ and the XW2Z-□□□H-□G.
Refer to the *I/O Signal Tables* on page 6.

FCN 56-pin - MIL 20-pin, MIL 20-pin, MIL 20-pin

XW2Z-□□□H-3 (For CS1-series I/O Unit Connection)

Appearance	Special Connecting Cables *				Sheath outer diameter (mm)/ Minimum bending radius (mm)
	Cable length L (m)			Model	
	Ⓐ	Ⓑ	Ⓒ		
	1.0	0.75	1.0	**XW2Z-100H-3**	12.1 dia./R99
	1.5	1.25	1.5	**XW2Z-150H-3**	
	2.0	1.75	2.0	**XW2Z-200H-3**	
	3.0	2.75	3.0	**XW2Z-300H-3**	
	5.0	4.75	5.0	**XW2Z-500H-3**	
	10.0	9.75	10.0	**XW2Z-010H-3**	

*Cable length L (m)

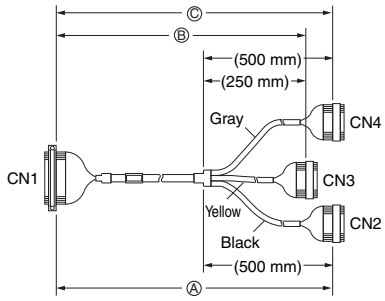

Linear lengths (not including bends)

*Up to two cables required for each Programmable Controller I/O Unit.

Downloaded from Arrow.com.

I/O Signal Tables (Example Using CN1 on CS1W-OD291)

XW2Z-□□□H-□ Connecting Cables

XW2Z-□□□H-3

XW2□-20G□

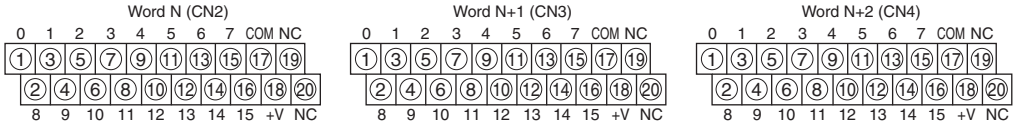

XW2Z-□□□H-2

XW2□-40G□

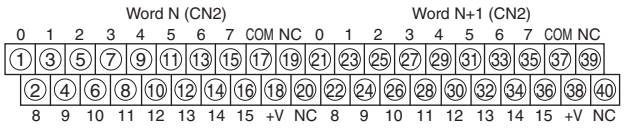

XW2□-20G□

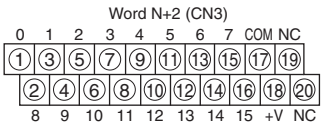

XW2Z-□□□H-□G/XW2Z-R□□□C-□□□-□□□ Connecting Cables

XW2Z-R□□□C-□□□-□□□

XW2□-20G□

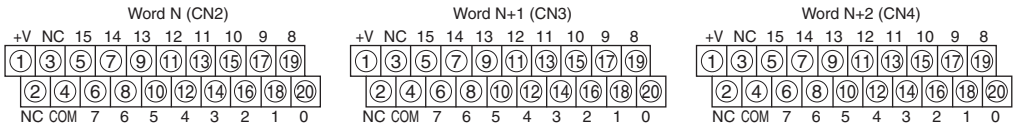

XW2Z-□□□H-2G

XW2□-40G□

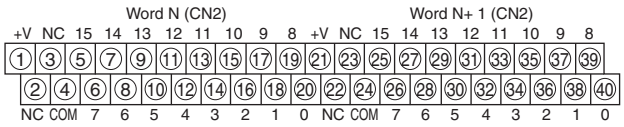

XW2□-20G□

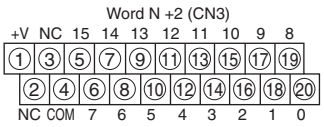

Note: The XW2Z-□□□H-□G I/O signal arrangement is oriented the same as the XW2Z-R Cables for I/O Relay Terminals.

FCN 40-pin - MIL 40-pin, Straight Wiring

XW2Z-□□□K

Appearance	Cable length L (m) *	Model	Sheath outer diameter (mm)/ Minimum bending radius (mm)
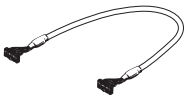	0.25	XW2Z-C25K	10.4 dia./R84
	0.5	XW2Z-C50K	
	1.0	XW2Z-100K	
	1.5	XW2Z-150K	
	2.0	XW2Z-200K	
	3.0	XW2Z-300K	
	5.0	XW2Z-500K	

*Cable length L (m)

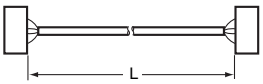

Wiring Diagram

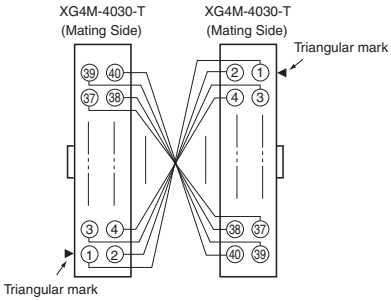

Note: Wire the pins 1:1 so that the Connector pin numbers match.

Downloaded from Arrow.com.

FCN 40-pin - MIL 20-pin, MIL 20-pin

XW2Z-□□□L

Appearance	Cable length L (m) *		Model	Sheath outer diameter (mm)/ Minimum bending radius (mm)
	Ⓐ	Ⓑ		
	1.0	0.75	**XW2Z-100L**	10.4 dia./R84
	1.5	1.25	**XW2Z-150L**	
	2.0	1.75	**XW2Z-200L**	
	3.0	2.75	**XW2Z-300L**	
	5.0	4.75	**XW2Z-500L**	
	10.0	9.75	**XW2Z-010L**	
	15.0	14.75	**XW2Z-15ML**	

*Cable length L (m)

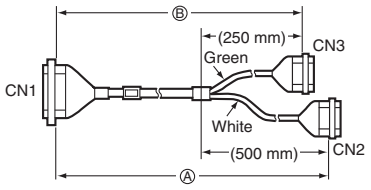

Wiring Diagram

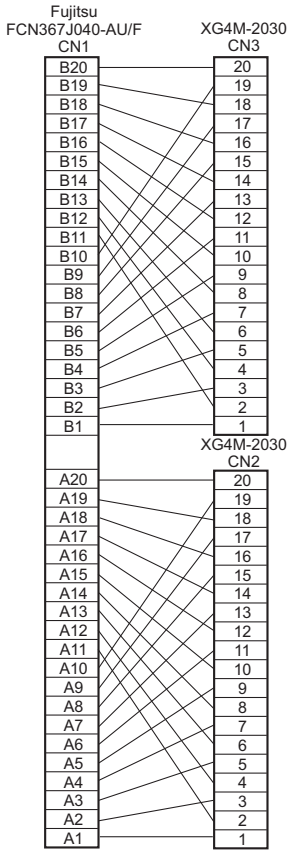

MIL 40-pin - MIL 20-pin, MIL 20-pin

XW2Z-□□□N

Appearance	Cable length L (m) *		Model	Sheath outer diameter (mm)/ Minimum bending radius (mm)
	Ⓐ	Ⓑ		
	1.0	0.75	**XW2Z-100N**	10.4 dia./R84
	1.5	1.25	**XW2Z-150N**	
	2.0	1.75	**XW2Z-200N**	
	3.0	2.75	**XW2Z-300N**	
	5.0	4.75	**XW2Z-500N**	
	10.0	9.75	**XW2Z-010N**	
	15.0	14.75	**XW2Z-15MN**	

*Cable length L (m)

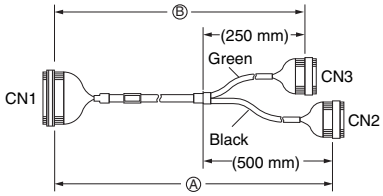

Linear lengths (not including bends)

Wiring Diagram

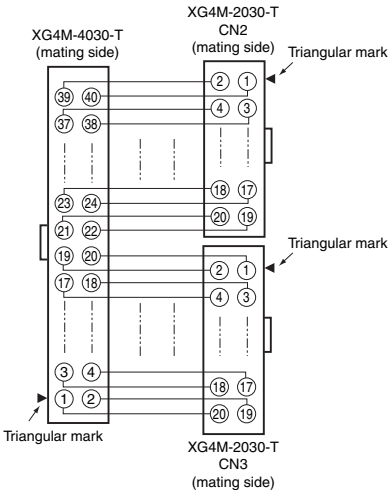

Downloaded from Arrow.com.

MIL 20-pin - MIL 20-pin, Straight Wiring

XW2Z-□□□X

Appearance	Cable length L (m) *	Model	Sheath outer diameter (mm)/ Minimum bending radius (mm)
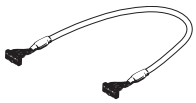	0.5	**XW2Z-C50X**	7.8 dia./R63
	1.0	**XW2Z-100X**	
	2.0	**XW2Z-200X**	
	3.0	**XW2Z-300X**	
	5.0	**XW2Z-500X**	
	10.0	**XW2Z-010X**	

*Cable length L (m)

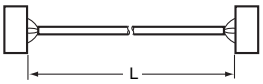

Wiring Diagram

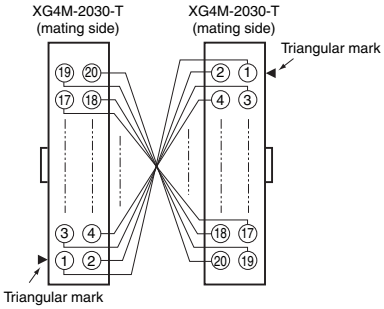

Note: Connector pins are connected 1-to-1 so that pin numbers correspond.

Downloaded from Arrow.com.

Terms and Conditions Agreement

Read and understand this catalog.
Please read and understand this catalog before purchasing the products. Please consult your OMRON representative if you have any questions or comments.

Warranties.
(a) Exclusive Warranty. Omron's exclusive warranty is that the Products will be free from defects in materials and workmanship for a period of twelve months from the date of sale by Omron (or such other period expressed in writing by Omron). Omron disclaims all other warranties, express or implied.
(b) Limitations. OMRON MAKES NO WARRANTY OR REPRESENTATION, EXPRESS OR IMPLIED, ABOUT NON-INFRINGEMENT, MERCHANTABILITY OR FITNESS FOR A PARTICULAR PURPOSE OF THE PRODUCTS. BUYER ACKNOWLEDGES THAT IT ALONE HAS DETERMINED THAT THE
PRODUCTS WILL SUITABLY MEET THE REQUIREMENTS OF THEIR INTENDED USE.
Omron further disclaims all warranties and responsibility of any type for claims or expenses based on infringement by the Products or otherwise of any intellectual property right. (c) Buyer Remedy. Omron's sole obligation hereunder shall be, at Omron's election, to (i) replace (in the form originally shipped with Buyer responsible for labor charges for removal or replacement thereof) the non-complying Product, (ii) repair the non-complying Product, or (iii) repay or credit Buyer an amount equal to the purchase price of the non-complying Product; provided that in no event shall Omron be responsible for warranty, repair, indemnity or any other claims or expenses regarding the Products unless Omron's analysis confirms that the Products were properly handled, stored, installed and maintained and not subject to contamination, abuse, misuse or inappropriate modification. Return of any Products by Buyer must be approved in writing by Omron before shipment. Omron Companies shall not be liable for the suitability or unsuitability or the results from the use of Products in combination with any electrical or electronic components, circuits, system assemblies or any other materials or substances or environments. Any advice, recommendations or information given orally or in writing, are not to be construed as an amendment or addition to the above warranty.
See http://www.omron.com/global/ or contact your Omron representative for published information.

Limitation on Liability; Etc.
OMRON COMPANIES SHALL NOT BE LIABLE FOR SPECIAL, INDIRECT, INCIDENTAL, OR CONSEQUENTIAL DAMAGES, LOSS OF PROFITS OR PRODUCTION OR COMMERCIAL LOSS IN ANY WAY CONNECTED WITH THE PRODUCTS, WHETHER SUCH CLAIM IS BASED IN CONTRACT, WARRANTY, NEGLIGENCE OR STRICT LIABILITY.
Further, in no event shall liability of Omron Companies exceed the individual price of the Product on which liability is asserted.

Suitability of Use.
Omron Companies shall not be responsible for conformity with any standards, codes or regulations which apply to the combination of the Product in the Buyer's application or use of the Product. At Buyer's request, Omron will provide applicable third party certification documents identifying ratings and limitations of use which apply to the Product. This information by itself is not sufficient for a complete determination of the suitability of the Product in combination with the end product, machine, system, or other application or use. Buyer shall be solely responsible for determining appropriateness of the particular Product with respect to Buyer's application, product or system. Buyer shall take application responsibility in all cases.
NEVER USE THE PRODUCT FOR AN APPLICATION INVOLVING SERIOUS RISK TO LIFE OR PROPERTY OR IN LARGE QUANTITIES WITHOUT ENSURING THAT THE SYSTEM AS A WHOLE HAS BEEN DESIGNED TO ADDRESS THE RISKS, AND THAT THE OMRON PRODUCT(S) IS PROPERLY RATED AND INSTALLED FOR THE INTENDED USE WITHIN THE OVERALL EQUIPMENT OR SYSTEM.

Programmable Products.
Omron Companies shall not be responsible for the user's programming of a programmable Product, or any consequence thereof.

Performance Data.
Data presented in Omron Company websites, catalogs and other materials is provided as a guide for the user in determining suitability and does not constitute a warranty. It may represent the result of Omron's test conditions, and the user must correlate it to actual application requirements. Actual performance is subject to the Omron's Warranty and Limitations of Liability.

Change in Specifications.
Product specifications and accessories may be changed at any time based on improvements and other reasons. It is our practice to change part numbers when published ratings or features are changed, or when significant construction changes are made. However, some specifications of the Product may be changed without any notice. When in doubt, special part numbers may be assigned to fix or establish key specifications for your application. Please consult with your Omron's representative at any time to confirm actual specifications of purchased Product.

Errors and Omissions.
Information presented by Omron Companies has been checked and is believed to be accurate; however, no responsibility is assumed for clerical, typographical or proofreading errors or omissions.

2025.4

In the interest of product improvement, specifications are subject to change without notice.

OMRON Corporation
Industrial Automation Company

http://www.ia.omron.com/

(c)Copyright OMRON Corporation 2025 All Right Reserved.

Downloaded from Arrow.com.