MICRO SWITCH
a Honeywell Division
FED. MFG. CODE 91929

SWITCH - ENCLOSED

CATALOG LISTING
BFL1-BP1

NOTES
1 - 3X 6-32 UNC PRESSURE PLATE TERMINAL SCREWS
2 FURNISHED UNASSEMBLED
3 SWITCH WILL OPERATE AND RELEASE WITHIN THIS TRAVEL

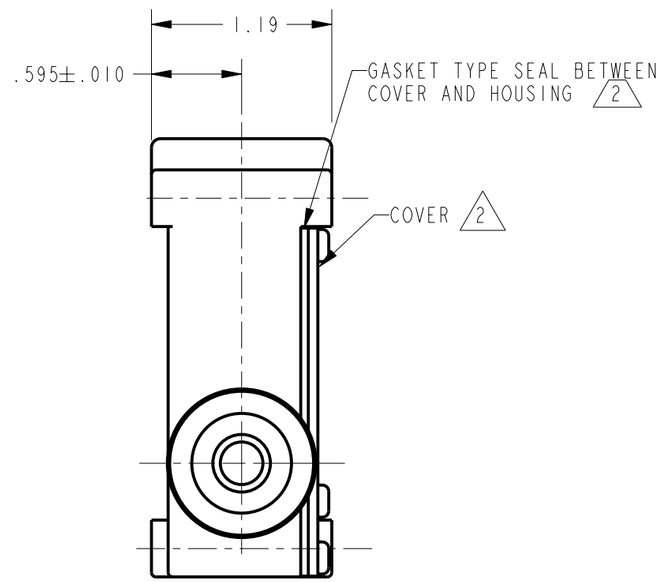

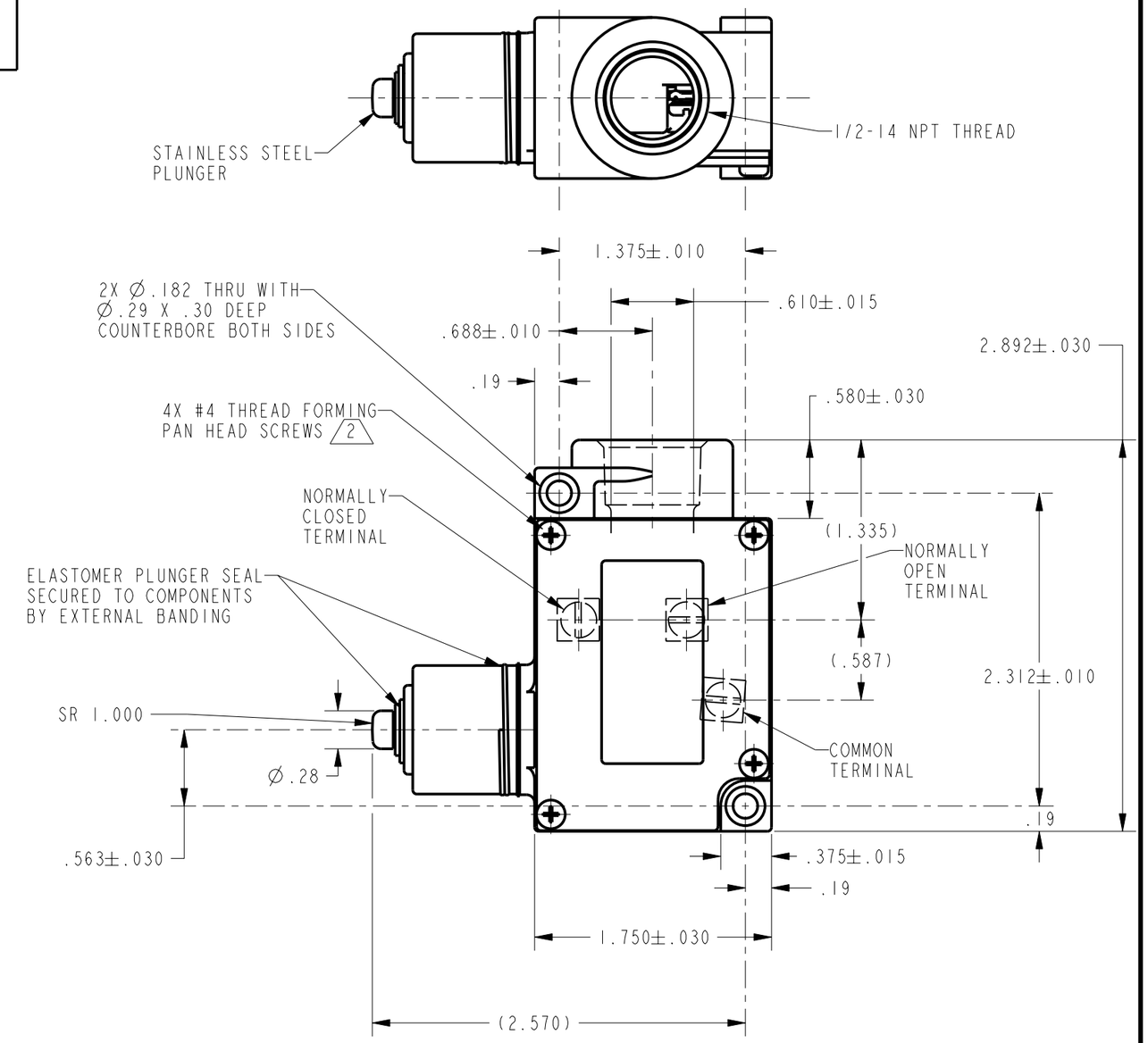

THIS DRAWING COVERS A PROPRIETARY ITEM AND IS THE PROPERTY OF MICRO SWITCH. A DIVISION OF HONEYWELL. THIS DRAWING IS NOT TO BE COPIED OR USED WITHOUT THE APPROVAL OF MICRO SWITCH

THIRD ANGLE PROJECTION

SCALE FULL

DO NOT SCALE PRINT

UNLESS OTHERWISE SPECIFIED TOLERANCES ARE

ONE PLACE	(.0)	±.030
TWO PLACE	(.00)	±.015
THREE PLACE	(.000)	±.005
ANGLES		±

WEIGHT

ANSI Y14.5M-1982 APPLIES

CHARACTERISTICS

OPERATING FORCE: ..... 44 OZ MAX
TOTAL TRAVEL: ..... 3 120 MIN
DIFFERENTIAL TRAVEL: ..... .025 NOM

ELECTRICAL DATA

CONTACT ARRANGEMENT
S P D T

L156
11A 1/3HP 125, 250, 277 VAC

1/2A 125 VDC, 1/4A 250 VDC
4A 125 VAC "L"

BFL1-BP1
CATALOG LISTING
PAGE 1 OF 1
RELEASE NO. 203802
REPLACES
ISSUE 1
CHECK
REVISIONS
CHECK
6 SEP 01
SAV
CHECK
6 SEP 01
DRAWN KED
PTC/CAD 3D

Downloaded from Arrow.com.