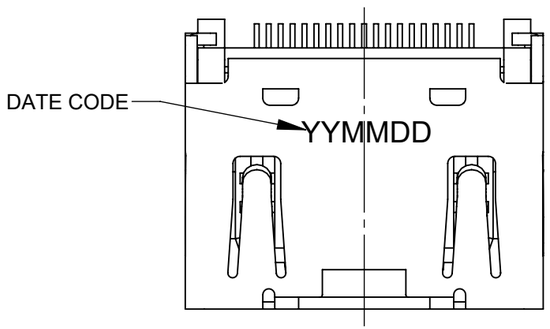

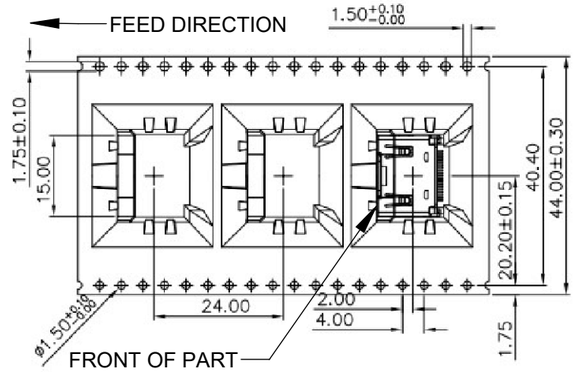

TAPE LAYOUT

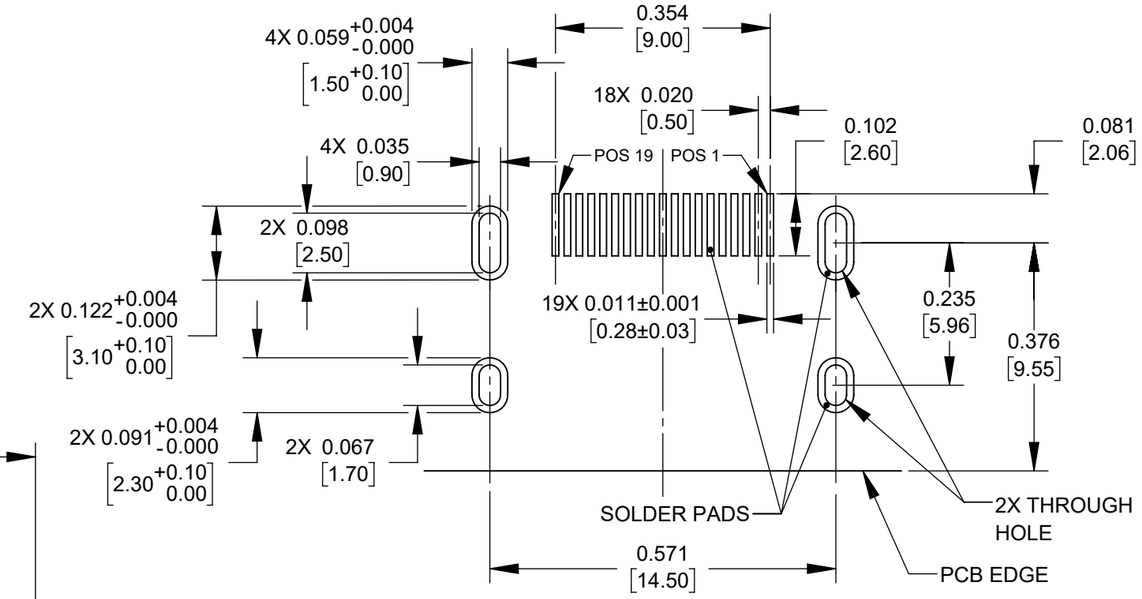

RECOMMENDED PCB LAYOUT
COMPONENT SIDE
UNSPECIFIED TOLERANCES ±0.002 [0.05]

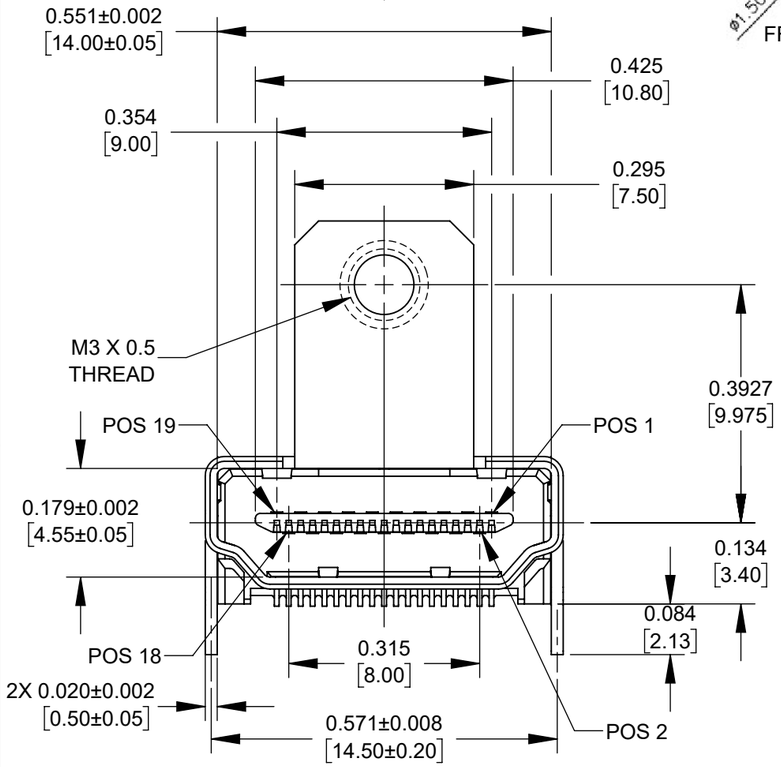

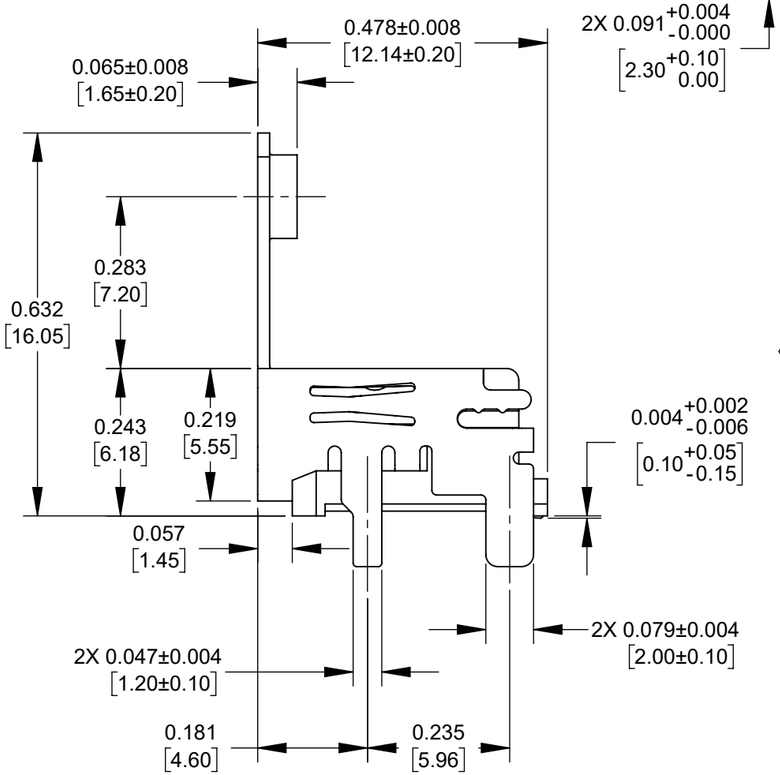

NOTES:

(A) 1. PARTS SUPPLIED ON TAPE AND REEL.
REEL SIZE ∅15.0 [380] PLASTIC, 150 PARTS PER REEL
TAPE CONFROMS TO ANSI/EIA-481

2. MATERIALS:
HOUSING - BLACK LCP
SHELL - BRASS, NICKEL PLATED
CONTACTS - BRASS, GOLD FLASH IN CONTACT AREA, TIN IN SOLDER AREA

3. ELECTRICAL CHARACTERSTICS:
CURRENT RATING - 0.5 AMP
VOLTAGE RATING - 40V

4. MECHANICAL CHARACTERISTICS:
INSERTION FORCE - 4.5Kgf MAX
WITHDRAWAL FORCE - 1.0~1.4 Kgf (INITIAL)
LIFE TEST - 5,000 CYCLES
OPERATING TEMPERATURE -25°C TO +85°C

5. THIS PRODUCT IS RoHS COMPLIANT.

CUSTOMER DRAWING

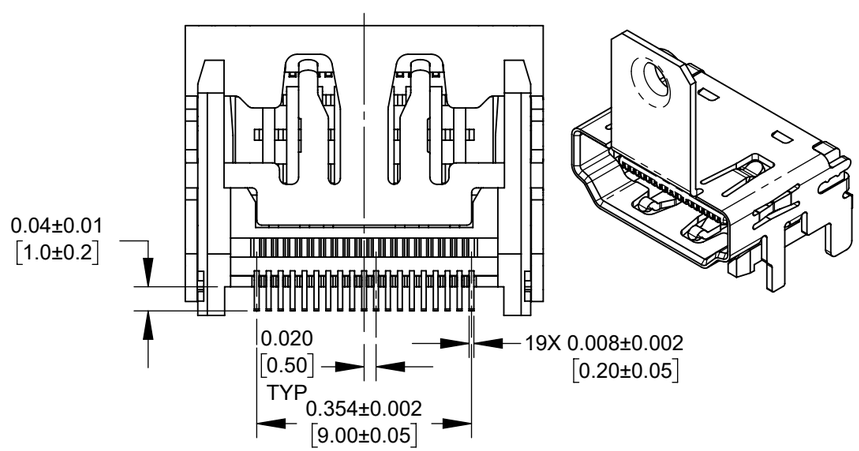

REV	ECO NUMBER	DATE	BY	APVD
A	28330	12/8/20	PC	TJK

REVISIONS

UNLESS OTHERWISE SPECIFIED
1. ALL DIMENSIONS IN INCHES [mm]
- TWO PLACE DECIMALS ±0.02 [0.5]
- THREE PLACE DECIMALS ±0.005 [0.13]

DO NOT SCALE DRAWING

THIS DRAWING DESCRIBES A DESIGN CONSIDERED PROPRIETARY IN NATURE, DEVELOPED AND MANUFACTURED BY SWITCHCRAFT INC. AND IS RELEASED ON A CONFIDENTIAL BASIS FOR IDENTIFICATION PURPOSES ONLY.

SIZE	WIDTH	MULT	LBS/M	TEMPER

FINISH
SPEC No.

MATERIAL
SPEC No.

FIRST USED ON

SCALE 4:1

DATE DRAWN	BY	CHKD	APVD
8/4/20	FM	FM 8/4/20	TJK 8/27/20

Switchcraft®

SHEET 1 OF 1

NAME HDMI TYPE A, RIGHT ANGLE FEMALE SMT, W/SCREW FLANGE, RoHS

PART No. RAHHD19SFTR

REV A

SolidWorks CAD File (B)

Downloaded from Arrow.com.