Important notice on ams-OSRAM documents

As part of the acquisition of the non-optical analog/mixed-signal sensor portfolio from ams-OSRAM by Infineon, Infineon is in the process of rebranding all relevant documents.
Due to the large volume of documents, this process will be completed in phases. In the interim, we are providing access to legacy ams-OSRAM documents under the terms of a trademark license agreement.

The attached document is a legacy ams-OSRAM document and has not been rebranded to reflect the acquisition by Infineon.

Please note that:

Infineon Technologies AG is the owner and provider of the document and the products/services described therein, effective from 1 July 2026, the date of “closing”.

All terms and conditions, including but not limited to warranties, liabilities, and intellectual property rights, are now governed by Infineon's policies and agreements.

All products described in these documents retain their original qualifications and certifications. Infineon confirms that no changes will be made to the products that would affect their compliance with relevant standards, regulations, or certifications.

Contact:

Infineon Technologies AG
Am Campeon 1-15
85579 Neubiberg
Germany

© 2026 Infineon Technologies AG
All Rights Reserved.
Email: erratum@infineon.com

Downloaded from Arrow.com.

Product Document

Published by
ams OSRAM Group

Downloaded from Arrow.com.

AS5145H/AS5145A/ AS5145B

12-Bit Programmable Magnetic Rotary Encoder

General Description

The AS5145 is a contactless magnetic rotary encoder for accurate angular measurement over a full turn of 360 degrees.

It is a system-on-chip, combining integrated Hall elements, analog front end and digital signal processing in a single device.

To measure the angle, only a simple two-pole magnet, rotating over the center of the chip, is required. The magnet can be placed above or below the IC.

The absolute angle measurement provides instant indication of the magnet's angular position with a resolution of 0.0879° = 4096 positions per revolution. This digital data is available as a serial bit stream and as a PWM signal.

An internal voltage regulator allows the AS5145 to operate at either 3.3V or 5V supplies.

Ordering Information and Content Guide appear at end of datasheet.

Key Benefits & Features

The benefits and features of AS5145H/AS5145A/AS5145B, 12-Bit Programmable Magnetic Rotary Encoder are listed below:

Figure 1:
Added Value of Using AS5145

Benefits	Features
• Highest reliability and durability	• Contactless high resolution rotational position encoding over a full turn of 360 degrees
• Simple programming	• Simple user-programmable zero position and settings
• Multiple interfaces	• Serial communication interface (SSI) • 10-bit pulse width modulated (PWM) output • Quadrature A/B and Index output signal
• Ideal for motor applications	• Rational speeds up to 30,000 rpm
• Failure diagnostics	• Failure detection mode for magnet placement monitoring and loss of power supply
• Easy setup	• Serial read-out of multiple interconnected AS5145 devices using Daisy Chain mode

Downloaded from Arrow.com.

Benefits	Features
• Great flexibility at a huge application area	• Detects movement of magnet in Z-axis (Red-Yellow-Green indicator)
• Fully automotive qualified	• AEC-Q100, grade 0
• Small form factor	• SSOP 16 (5.3mm x 6.2mm)
• Robust environmental tolerance	• Wide temperature range: -40°C to 150°C

Applications

The device is ideal for industrial applications like contactless rotary position sensing and robotics; automotive applications like steering wheel position sensing, transmission gearbox encoder, head light position control, torque sensing, valve position sensing and replacement of high end potentiometers.

Block Diagram

The functional blocks of this device are shown below:

Figure 2:
AS5145 Automotive Rotary Encoder IC

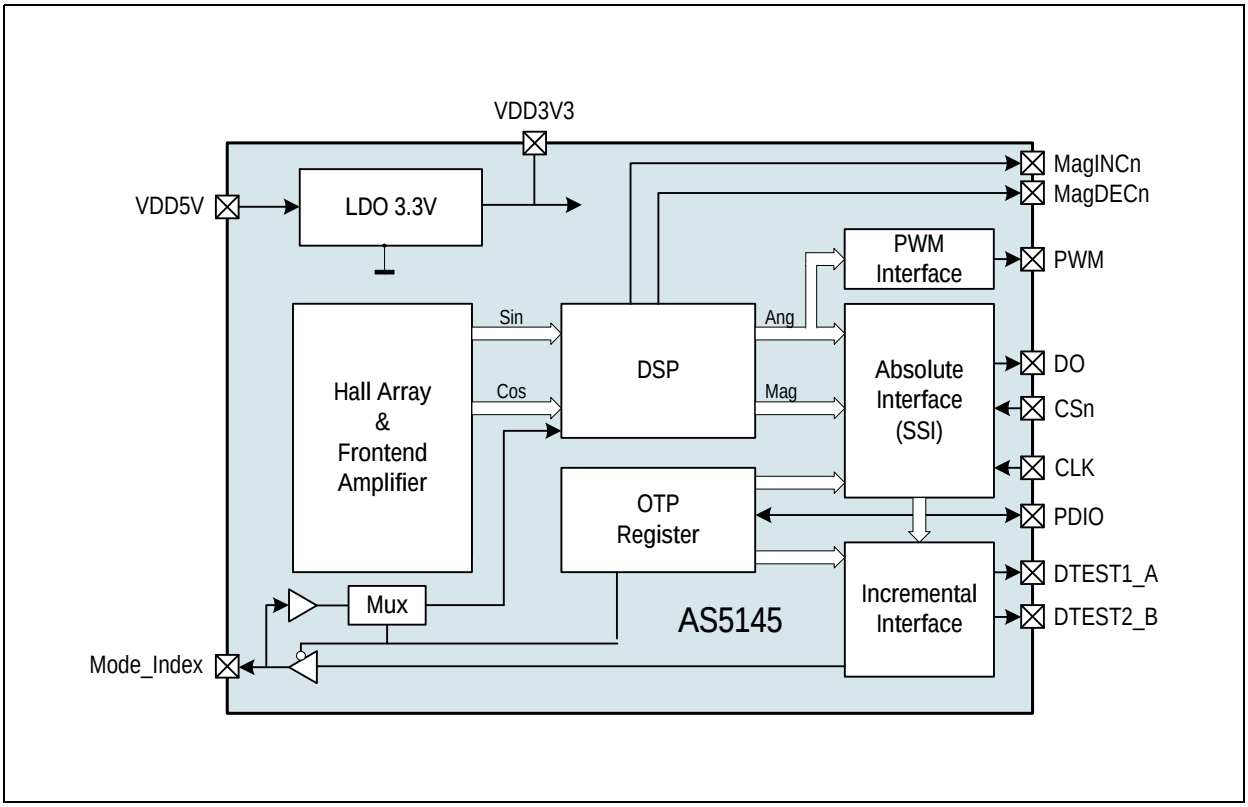

Downloaded from Arrow.com.

Pin Assignment

Figure 3:
Pin Diagram (Top View)

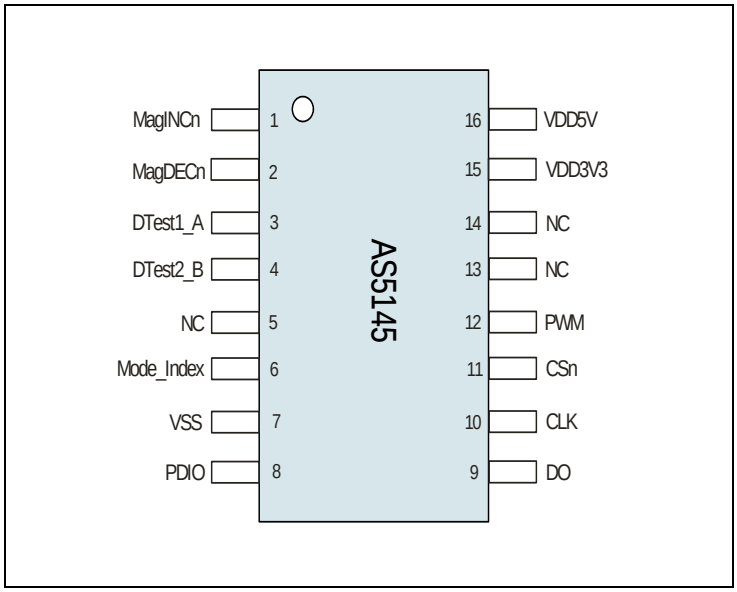

Pin Description

The following SSOP16 shows the description of each pin of the standard SSOP16 package (Shrink Small Outline Package, 16 leads, body size: 5.3mm x 6.2mm; (see Figure 3).

Figure 4:
Pin Description

Pin Name	Pin Number	Pin Type	Description
MagINCn	1	Digital output open drain	**Magnet Field Magnitude Increase.** Active low. Indicates a distance reduction between the magnet and the device surface. (see Figure 15)
MagDECn	2		**Magnet Field Magnitude Decrease.** Active low. Indicates a distance increase between the device and the magnet. (see Figure 15)
DTest1_A	3	Digital output	Test output in default mode
DTest2_B	4		Test output in default mode
NC	5	-	Must be left unconnected
Mode_Index	6	Digital input/output pull-down	Select between slow (open, low: VSS) and fast (high) mode. Internal pull-down resistor (10kΩ).
VSS	7	Supply pin	Negative supply voltage (GND)

Downloaded from Arrow.com.

Pin Name	Pin Number	Pin Type	Description
PDIO	8	Digital input pull-down	**OTP Programming Input and Data Input for Daisy Chain Mode.** Pin has an internal pull-down resistor (74kΩ). Connect this pin to VSS if programming is not required.
DO	9	Digital output/ tri-state	**Data Output** of Synchronous Serial Interface
CLK	10	Digital input, Schmitt-Trigger input	**Clock Input** of Synchronous Serial Interface; Schmitt-Trigger input
CSn	11	Digital input pull-down, Schmitt-Trigger input	**Chip Select.** Active low. Schmitt-Trigger input, internal pull-up resistor (50kΩ)
PWM	12	Digital output	Pulse Width Modulation
NC	13	-	Must be left unconnected
NC	14	-	Must be left unconnected
VDD3V3	15	Supply pin	3V-Regulator output, internally regulated from VDD5V. Connect to VDD5V for 3V supply voltage. Do not load externally.
VDD5V	16	Supply pin	Positive supply voltage, 3.0V to 5.5V

Pin 1 and 2 are the magnetic field change indicators, MagINCn and MagDECn (magnetic field strength increase or decrease through variation of the distance between the magnet and the device). These outputs can be used to detect the valid magnetic field range. Furthermore those indicators can also be used for contactless push-button functionality.

Pin 3 and 4 are multi function pins for sync mode, sine/cosine mode and incremental mode.

Pin 6 Mode_Index allows switching between filtered (slow) and unfiltered (fast mode). In incremental mode, the pin changes from input to output and provides the index pulse information. A change of the mode during operation is not allowed. The setup must be constant during power up and during operation.

Pins 7, 15, and 16 are supply pins, pins 5, 13, and 14 are for internal use and must not be connected.

Pin 8 (PDIO) is used to program the zero-position into the OTP(see page 27). This pin is also used as digital input to shift serial data through the device in daisy chain configuration, (see page 18).

Downloaded from Arrow.com.

Pin 11 Chip Select (CSn; active low) selects a device within a network of AS5145 encoders and initiates serial data transfer. A logic high at CSn puts the data output pin (DO) to tri-state and terminates serial data transfer. This pin is also used for alignment mode (see Alignment Mode) and programming mode (see Programming the AS5145).

Pin 12 allows a single wire output of the 12-bit absolute position value. The value is encoded into a pulse width modulated signal with 1µs pulse width per step (1µs to 4096µs over a full turn). By using an external low pass filter, the digital PWM signal is converted into an analog voltage, e.g. for making a direct replacement of potentiometers possible.

Downloaded from Arrow.com.

Absolute Maximum Ratings

Stresses beyond those listed in Absolute Maximum Ratings may cause permanent damage to the device. These are stress ratings only, and functional operation of the device at these or any other conditions beyond those indicated in Electrical Characteristics is not implied. Exposure to absolute maximum rating conditions for extended periods may affect device reliability.

Figure 5:
Absolute Maximum Ratings

Parameter	Min	Max	Units	Comments
Electrical Parameters				
DC supply voltage at pin VDD5V	-0.3	7	V	
DC supply voltage at pin VDD3V3		5	V	
Input pin voltage	-0.3	VDD5V +0.3	V	Except VDD3V3
Input current (latchup immunity)	-100	100	mA	AEC-Q100-004
Electrostatic Discharge				
Electrostatic discharge	± 2		kV	AEC-Q100-002
Temperature Ranges and Storage Conditions				
Storage temperature	-65	175	°C	Min -67°F; Max 302°F
Package body temperature		260	°C	The reflow peak soldering temperature (body temperature) specified is in accordance with *IPC/JEDEC J-STD-020 "Moisture/Reflow Sensitivity Classification for Non-Hermetic Solid State Surface Mount Devices".* The lead finish for Pb-free leaded packages is matte tin (100% Sn).
Relative humidity non-condensing	5	85	%	
Moisture sensitivity level (MSL)	3			Represents a maximum floor time of 168h

Downloaded from Arrow.com.

Electrical Characteristics

T_{AMB} = -40°C to 150°C, VDD5V = 3.0-3.6V (3V operation)
VDD5V = 4.5-5.5V (5V operation) unless otherwise noted.

Figure 6:
Electrical Characteristics

Symbol	Parameter	Condition	Min	Typ	Max	Unit
Operating Conditions						
T_{AMB}	Ambient temperature	Version H/A/B	-40		150	°C
I_{supp}	Supply current			16	21	mA
VDD5V	Supply voltage at pin VDD5V	5V operation	4.5	5.0	5.5	V
VDD3V3	Voltage regulator output voltage at pin VDD3V3		3.0	3.3	3.6	
VDD5V	Supply voltage at pin VDD5V	3.3V operation (pin VDD5V and VDD3V3 connected)	3.0	3.3	3.6	V
VDD3V3	Supply voltage at pin VDD3V3		3.0	3.3	3.6	
V_{ON}	Power-on reset thresholds On voltage; 300mV typ. hysteresis	DC supply voltage 3.3V (VDD3V3)	1,37	2.2	2.9	V
V_{off}	Power-on reset thresholds Off voltage; 300mV typ. hysteresis		1.08	1.9	2.6	
Programming Conditions						
V_{PROG}	Programming voltage	Voltage applied during programming	3.3		3.6	V
$V_{ProgOff}$	Programming voltage off level	Line must be discharged to this level	0		1	V
I_{PROG}	Programming current	Current during programming			100	mA
$R_{programmed}$	Programmed fuse resistance (log 1)	10µA max. current @ 100mV	10k		∞	Ω
$R_{unprogrammed}$	Unprogrammed fuse resistance (log 0)	2mA max. current @ 100mV	50		100	Ω

Downloaded from Arrow.com.

Symbol	Parameter	Condition	Min	Typ	Max	Unit
DC Characteristics CMOS Schmitt-Trigger Inputs: CLK, CSn (CSn = Internal Pull-Up)						
V_{IH}	High level input voltage	Normal operation	0.7 * VDD5V			V
V_{IL}	Low level input voltage				0.3 * VDD5V	V
V_{Ion-} V_{Ioff}	Schmitt Trigger hysteresis		1			V
I_{LEAK}	Input leakage current	CLK only	-1		1	µA
I_{IL}	Pull-up low level input current	CSn only, VDD5V: 5.0V	-30		-100	
DC Characteristics CMOS / Program Input: PDIO						
V_{IH}	High level input voltage		0.7 * VDD5V		VDD5V	V
V_{PROG} (1)	High level input voltage	During programming	3.3		3.6	V
V_{IL}	Low level input voltage				0.3 * VDD5V	V
I_{IH}	High level input current	VDD5V: 5.5V	30		100	µA
DC Characteristics CMOS Output Open Drain: MagINCn, MagDECn						
I_{OZ}	Open drain leakage current				1	µA
V_{OL}	Low level output voltage				VSS + 0.4	V
I_O	Output current	VDD5V: 4.5V			4	mA
		VDD5V: 3V			2	

Downloaded from Arrow.com.

Symbol	Parameter	Condition	Min	Typ	Max	Unit
DC Characteristics CMOS Output: PWM						
V_{OH}	High level output voltage		VDD5V – 0.5			V
V_{OL}	Low level output voltage				VSS +0.4	V
I_O	Output current	VDD5V: 4.5V			4	mA
		VDD5V: 3V			2	
DC Characteristics CMOS Output: A, B, Index						
V_{OH}	High level output voltage		VDD5V – 0.5			V
V_{OL}	Low level output voltage				VSS +0.4	V
I_O	Output current	VDD5V: 4.5V			4	mA
		VDD5V: 3V			2	
DC Characteristics Tri-State CMOS Output: DO						
V_{OH}	High level output voltage		VDD5V – 0.5			V
V_{OL}	Low level output voltage				VSS +0.4	V
I_O	Output current	VDD5V: 4.5V			4	mA
		VDD5V: 3V			2	
I_{OZ}	Tri-state leakage current				1	µA

Note(s):

1. Either with 3.3V or 5V supply.

Downloaded from Arrow.com.

Magnetic Input Specification

T_{AMB} = -40°C to 150°C, VDD5V = 3.0V to 3.6V (3V operation) VDD5V = 4.5V to 5.5V (5V operation) unless otherwise noted.

Two-pole cylindrical diametrically magnetized source:

Figure 7:
Magnetic Input Specification

Symbol	Parameter	Condition	Min	Typ	Max	Unit
d_{mag}	Diameter	Recommended magnet: Ø 6mm x 2.5mm for cylindrical magnets	4	6		mm
t_{mag}	Thickness		2.5			mm
B_{pk}	Magnetic input field amplitude	Required vertical component of the magnetic field strength on the die's surface, measured along a concentric circle with a radius of 1.1mm	45		75	mT
B_{off}	Magnetic offset	Constant magnetic stray field			± 10	mT
	Field non-linearity	Including offset gradient			5	%
f_{mag_abs}	Input frequency (rotational speed of magnet)	153 rpm @ 4096 positions/rev; fast mode			2.54	Hz
		38 rpm @ 4096 positions/rev; slow mode			0.63	
Disp	Displacement radius	Max. offset between defined device center and magnet axis (see Figure 34)			0.25	mm
Ecc	Eccentricity	Eccentricity of magnet center to rotational axis			100	µm
	Recommended magnet material and temperature drift	NdFeB (Neodymium Iron Boron)		-0.12		%/K
		SmCo (Samarium Cobalt)		-0.035		

Downloaded from Arrow.com.

System Specifications

T_{AMB} = -40°C to 150°C, VDD5V = 3.0V to 3.6V (3V operation)
VDD5V = 4.5V to 5.5V (5V operation) unless otherwise noted.

Figure 8:
Input Specification

Symbol	Parameter	Condition	Min	Typ	Max	Unit
RES	Resolution	0.088deg			12	bit
INL_{opt}	Integral non-linearity (optimum)	Maximum error with respect to the best line fit. Centered magnet without calibration, T_{AMB} =25°C.			±0.5	deg
INL_{temp}	Integral non-linearity (optimum)	Maximum error with respect to the best line fit. Centered magnet without calibration, T_{AMB} = -40°C to 150°C			±0.9	deg
INL	Integral non-linearity	Best line fit = (Err_{max} – Err_{min}) / 2 Over displacement tolerance with 6mm diameter magnet, without calibration, T_{AMB} = -40°C to 150°C			±1.4	deg
DNL	Differential non-linearity	12-bit, no missing codes			±0.044	deg
TN	Transition noise	1 sigma, fast mode (MODE = 1)			0.06	deg RMS
		1 sigma, slow mode (MODE = 0 or open)			0.03	
t_{PwrUp}	Power-up time	Fast mode (Mode = 1); Until status bit OCF = 1			20	ms
		Slow mode (Mode = 0 or open); Until OCF = 1			80	
t_{delay}	System propagation delay absolute output : delay of ADC, DSP and absolute interface	Fast mode (MODE = 1)			96	µs
		Slow mode (MODE = 0 or open)			384	
$t_{delayINC}$	System propagation delay incremental output AS5145A and AS5145B: delay of ADC, DSP and incremental interface	Only fast mode possible			192	µs

Downloaded from Arrow.com.

Symbol	Parameter	Condition	Min	Typ	Max	Unit
f_S	Internal sampling rate for absolute output:	T_{AMB} = 25°C, slow mode (MODE=0 or open)	2.48	2.61	2.74	kHz
		T_{AMB} = -40°C to 150°C, slow mode (MODE=0 or open)	2.35	2.61	2.87	
f_S	Internal sampling rate for absolute output	T_{AMB} = 25°C, fast mode (MODE = 1)	9.90	10.42	10.94	kHz
		T_{AMB} = -40°C to 150°C, fast mode (MODE=1)	9.38	10.42	11.46	
CLK/SEL	Read-out frequency	Max. clock frequency to read out serial data			1	MHz

Figure 9:
Integral and Differential Non-Linearity Example

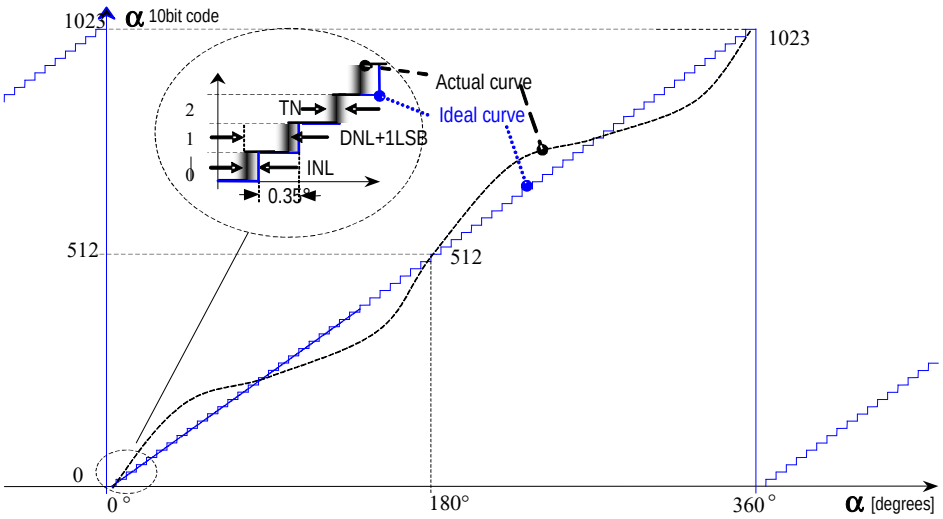

Integral Non-Linearity (INL) is the maximum deviation between actual position and indicated position.

Differential Non-Linearity (DNL) is the maximum deviation of the step length from one position to the next.

Transition Noise (TN) is the repeatability of an indicated position.

Downloaded from Arrow.com.

Timing Characteristics

T_{AMB} = -40°C to 150°C, VDD5V = 3.0V to 3.6V (3V operation) VDD5V = 4.5V to 5.5V (5V operation), unless otherwise noted.

Figure 10:
Timing Characteristics

Symbol	Parameter	Conditions	Min	Typ	Max	Units
Synchronous Serial Interface (SSI)						
$t_{DOactive}$	Data output activated (logic high)	Time between falling edge of CSn and data output activated			100	ns
t_{CLKFE}	First data shifted to output register	Time between falling edge of CSn and first falling edge of CLK	500			ns
$T_{CLK/2}$	Start of data output	Rising edge of CLK shifts out one bit at a time	500			ns
$t_{DOvalid}$	Data output valid	Time between rising edge of CLK and data output valid			413	ns
$t_{DOtristate}$	Data output tri-state	After the last bit DO changes back to “tri-state”			100	ns
t_{CSn}	Pulse width of CSn	CSn =high; To initiate read-out of next angular position	500			ns
f_{CLK}	Read-out frequency	Clock frequency to read out serial data	>0		1	MHz
Pulse Width Modulation Output						
f_{PWM}	PWM frequency	Signal period = 4098µs ±10% at T_{AMB} = -40 to 150°C	220	244	268	Hz
PW_{MIN}	Minimum pulse width	Position 0d; angle 0 degree	0.90	1	1.10	µs
PW_{MAX}	Maximum pulse width	Position 4098d; angle 359.91 degrees	3686	4096	4506	µs
Programming Conditions						
t_{PROG}	Programming time per bit	Time to prog. a single fuse bit	10		20	µs
t_{CHARGE}	Refresh time per bit	Time to charge the cap after t_{PROG}	1			µs
f_{LOAD}	LOAD frequency	Data can be loaded at n x 2µs			500	kHz
f_{READ}	READ frequency	Read the data from the latch			2.5	MHz
f_{WRITE}	WRITE frequency	Write the data to the latch			2.5	MHz

Downloaded from Arrow.com.

Detailed Description

The AS5145 is manufactured in a CMOS standard process and uses a spinning current Hall technology for sensing the magnetic field distribution across the surface of the chip. The integrated Hall elements are placed around the center of the device and deliver a voltage representation of the magnetic field at the surface of the IC.

Through Sigma-Delta Analog / Digital Conversion and Digital Signal-Processing (DSP) algorithms, the AS5145 provides accurate high-resolution absolute angular position information. For this purpose a Coordinate Rotation Digital Computer (CORDIC) calculates the angle and the magnitude of the Hall array signals.

The DSP is also used to provide digital information at the outputs MagINCn and MagDECn that indicate movements of the used magnet towards or away from the device's surface. A small low cost diametrically magnetized (two-pole) standard magnet provides the angular position information (see Figure 33).

The AS5145 senses the orientation of the magnetic field and calculates a 12-bit binary code. This code can be accessed via a Synchronous Serial Interface (SSI). In addition, an absolute angular representation is given by a Pulse Width Modulated signal at pin 12 (PWM). This PWM signal output also allows the generation of a direct proportional analog voltage, by using an external Low-Pass-Filter. The AS5145 is tolerant to magnet misalignment and magnetic stray fields due to differential measurement technique and Hall sensor conditioning circuitry.

Figure 11:
Typical Arrangement of AS5145 and Magnet

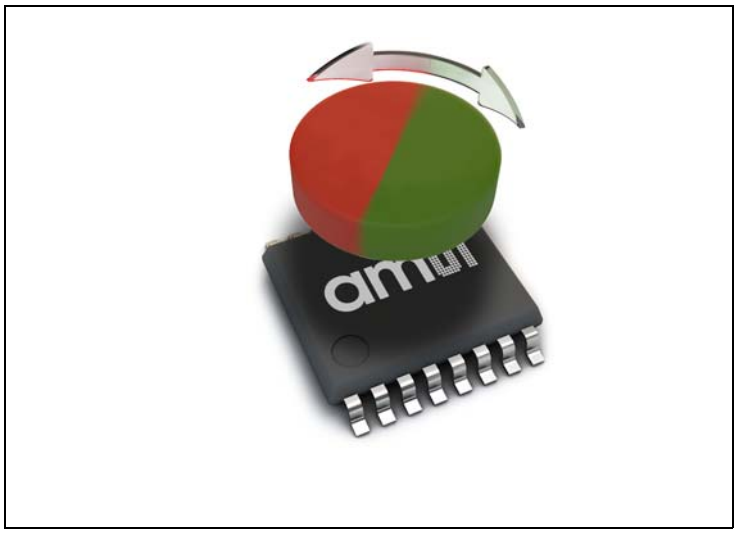

Downloaded from Arrow.com.

Mode_Index Pin

The Mode_Index pin activates or deactivates an internal filter that is used to reduce the analog output noise.

Activating the filter (Mode pin = LOW or open) provides a reduced output noise of 0.03° rms. At the same time, the output delay is increased to 384µs. This mode is recommended for high precision, low speed applications.

Deactivating the filter (Mode pin = HIGH) reduces the output delay to 96µs and provides an output noise of 0.06° rms. This mode is recommended for higher speed applications.

Setup the Mode pin affects the following parameters:

Figure 12:
Slow and Fast Mode Parameters

Parameter	Slow Mode (Mode = Low or Open)	Fast Mode (Mode = High, VDD= 5V)
Sampling rate	2.61 kHz (384 µs)	10.42kHz (96µs)
Transition noise (1 sigma)	≤ 0.03° rms	≤ 0.06° rms
Output delay	384µs	96µs
Maximum speed @ 4096 samples/rev	38rpm	153rpm
Maximum speed @ 1024 samples/rev	153rpm	610rpm
Maximum speed @ 256 samples/rev	610rpm	2441rpm
Maximum speed @ 64 samples/rev	2441 rpm	9766rpm

Note(s):

1. A change of the Mode during operation is not allowed. The setup must be constant during power up and during operation.

Downloaded from Arrow.com.

Synchronous Serial Interface (SSI)

Figure 13:
Synchronous Serial Interface with Absolute Angular Position Data

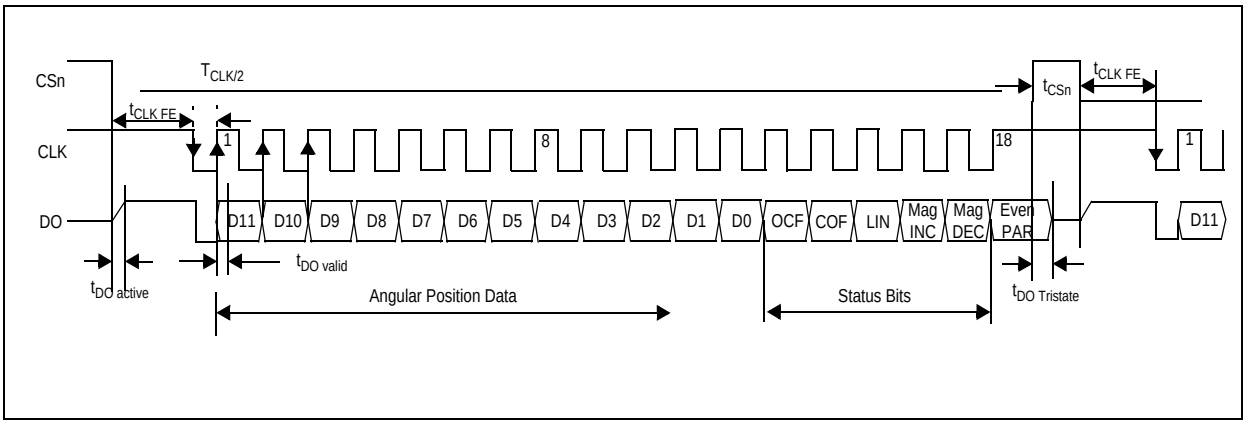

If CSn changes to logic low, Data Out (DO) will change from high impedance (tri-state) to logic high and the read-out will be initiated.

- After a minimum time $t_{CLK\ FE}$, data is latched into the output shift register with the first falling edge of CLK.
- Each subsequent rising CLK edge shifts out one bit of data.
- The serial word contains 18 bits, the first 12 bits are the angular information D[11:0], the subsequent 6 bits contain system information, about the validity of data such as OCF, COF, LIN, Parity and Magnetic Field status (increase/decrease).
- A subsequent measurement is initiated by a "high" pulse at CSn with a minimum duration of t_{CSn}.

Data Content

D11:D0 absolute angular position data (MSB is clocked out first)

OCF (Offset Compensation Finished), logic high indicates the finished Offset Compensation Algorithm

COF (CORDIC Overflow), logic high indicates an out of range error in the CORDIC part. When this bit is set, the data at D11:D0 is invalid. The absolute output maintains the last valid angular value.

This alarm can be resolved by bringing the magnet within the X-Y-Z tolerance limits.

LIN (Linearity Alarm), logic high indicates that the input field generates a critical output linearity.
When this bit is set, the data at D11:D0 can still be used, but can contain invalid data. This warning can be resolved by bringing the magnet within the X-Y-Z tolerance limits.

Even Parity bit for transmission error detection of bits 1…17 (D11…D0, OCF, COF, LIN, MagINC, MagDEC)

Placing the magnet above the chip, angular values increase in clockwise direction by default.

Downloaded from Arrow.com.

Data D11:D0 is valid, when the status bits have the following configurations:

Figure 14:
Status Bit Options

OCF	COF	LIN	Mag INC	Mag DEC	Parity
1	0	0	0	0	Even checksum of bits 1:15
			0	1	
			1	0	
			1	1	

Note(s):

1. MagInc=MagDec=1 is only recommended in YELLOW mode (see Figure 15)

Z-Axis Range Indication (Push Button Feature, Red/Yellow/Green Indicator)

The AS5145 provides several options of detecting movement and distance of the magnet in the Z-direction. Signal indicators MagINCn and MagDECn are available both as hardware pins (pins #1 and 2) and as status bits in the serial data stream (see Figure 15).

In the default state, the status bits MagINC, MagDec and pins MagINCn, MagDECn have the following function:

Figure 15:
Magnetic Field Strength Red-Yellow-Green Indicator

Status Bits			Hardware Pins		OTP: Mag CompEn = 1 (Red-Yellow-Green)
Mac INC	Mag DEC	LIN	Mac INCn	Mag DECn	Description
0	0	0	Off	Off	No distance change Magnetic input field OK (GREEN range, ~45mT to 75mT)
1	1	0	On	Off	YELLOW range: magnetic field is ~ 25mT to 45mT or ~75mT to 135mT. The AS5145 can still be operated in this range, but with slightly reduced accuracy.
1	1	1	On	On	RED range: magnetic field is ~<25mT or >~135mT. It is still possible to operate the AS5145 in the red range, but not recommended.
All other combinations			n/a	n/a	Not available

Note(s):

1. Pin 1 (MagINCn) and pin 2 (MagDECn) are active low via open drain output and require an external pull-up resistor. If the magnetic field is in range, both outputs are turned off.

Downloaded from Arrow.com.

The two pins can also be combined with a single pull-up resistor. In this case, the signal is high when the magnetic field is in range. It is low in all other cases (see Figure 15).

Incremental Mode

The AS5145 has an internal interpolator block. This function is used if the input magnetic field is to fast and a code position is missing. In this case an interpolation is done.

With the OTP bits OutputMd0 and OutputMd1 a specific mode can be selected. For the available pre-programmed incremental versions (10-bit and 12-bit), these bits are set during test at ams. These settings are permanent and can not be recovered.

A change of the incremental mode (WRITE command) during operation could cause problems. A power-on-reset in between is recommended.

Figure 16:
Incremental Resolution

Mode	Description	Output Md1	Output Md0	Resolution	DTest1_A and DTest2_B Pulses	Index Width
Default mode	AS5145 function **DTEST1_A** and **DTEST2_B** are not used. The **Mode_Index** pin is used for selection of the decimation rate (low speed/high speed).	0	0			
10-bit Incremental mode (low DNL)	**DTEST1_A** and **DTEST2_B** are used as **A** and **B** signal. In this mode the **Mode_Index** Pin is switched from input to output and will be the **Index** Pin. The decimation rate is set to 64 (fast mode) and cannot be changed from external.	0	1	10	256	1/3 LSB
12-bit Incremental mode (high DNL)		1	0	12	1024	
Sync mode	In this mode a control signal is switched to **DTEST1_A** and **DTEST2_B**.	1	1			

Downloaded from Arrow.com.

Incremental Power-Up Lock Option

After power-up, the incremental outputs can optionally be locked or unlocked, depending on the status of the CSn pin:

- CSn = low at power-up: CSn has an internal pull-up resistor and must be externally pulled low ($R_{ext} \leq 5k\Omega$). If Csn is low at power-up, the incremental outputs (A, B, Index) will be high until the internal offset compensation is finished. This unique state (A=B=Index = high) can be used as an indicator for the external controller to shorten the waiting time at power-up. Instead of waiting for the specified maximum power up-time (0), the controller can start requesting data from the AS5145 as soon as the state (A=B=Index = high) is cleared.
- CSn = high or open at power-up: In this mode, the incremental outputs (A, B, Index) will remain at logic high state, until CSn goes low or a low pulse is applied at CSn. This mode allows intentional disabling of the incremental outputs until, for example the system microcontroller is ready to receive data.

Figure 17:
Incremental Output

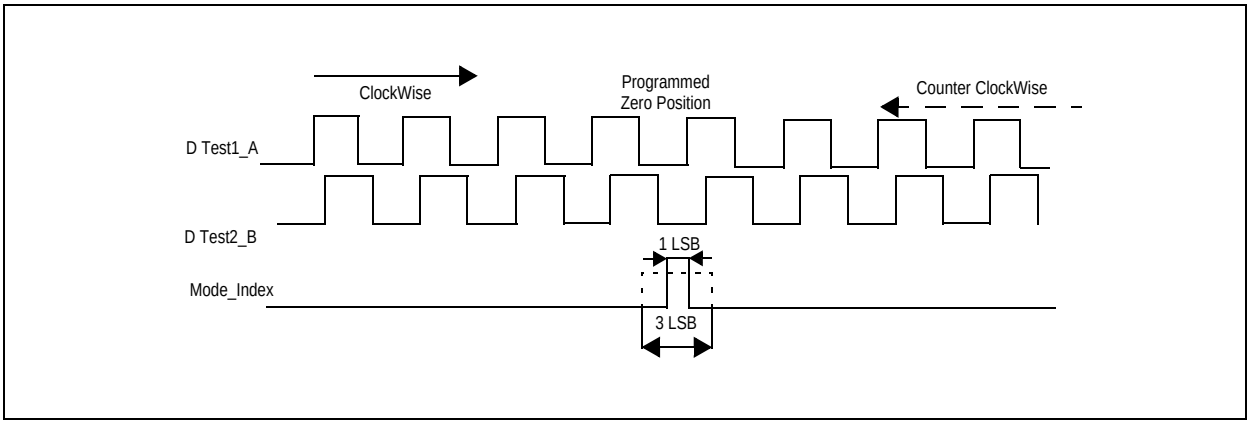

The hysteresis trimming is done at the final test (factory trimming) and set to 4 LSB, related to a 12-bit number.

Downloaded from Arrow.com.

Incremental Output Hysteresis

To avoid flickering incremental outputs at a stationary magnet position, a hysteresis is introduced. In case of a rotational direction change, the incremental outputs have a hysteresis of 4 LSB. Regardless of the programmed incremental resolution, the hysteresis of 4 LSB always corresponds to the highest resolution of 12-bit. In absolute terms, the hysteresis is set to 0.35 degrees for all resolutions. For constant rotational directions, every magnet position change is indicated at the incremental outputs (see Figure 18). For example, if the magnet turns clockwise from position "x+5" to "x+6", the incremental output would also indicate this position accordingly. A change of the magnet's rotational direction back to position "x+5" means that the incremental output still remains unchanged for the duration of 4 LSB, until position "x+2" is reached. Following this direction, the incremental outputs will again be updated with every change of the magnet position.

Figure 18:
Hysteresis Window for Incremental Outputs

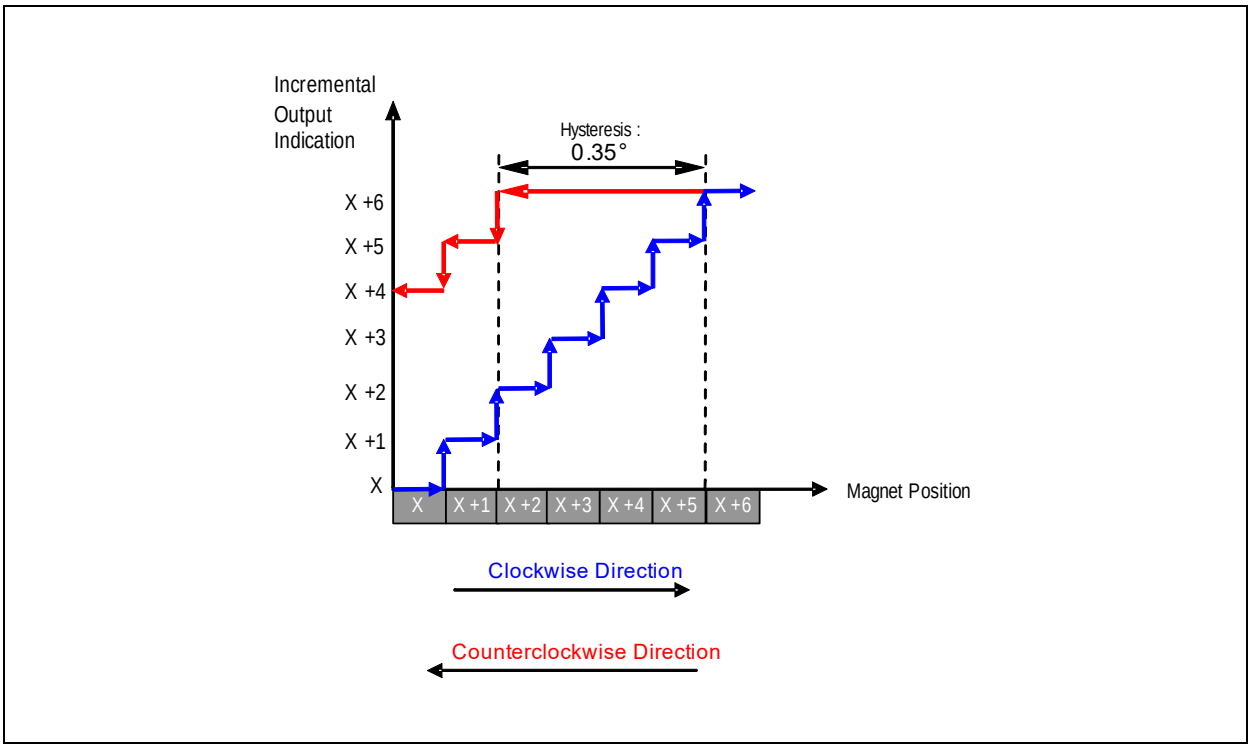

Incremental Output Validity

During power on the incremental output is kept stable high until the offset compensation is finished and the CSn is low (internal Pull Up) the first time. In quadrature mode A = B = Index = high indicates an invalid output. If the interpolator recognizes a difference larger than 128 steps between two samples it holds the last valid state. The interpolator synchronizes up again with the next valid difference. This avoids undefined output burst, e.g. if no magnet is present.

Downloaded from Arrow.com.

Sync Mode

This mode is used to synchronize the external electronic with the AS5145. In this mode two signals are provided at the pins DTEST1_A and DTEST2_B. By setting of Md0=1 and Md1=1 in the OTP register, the Sync Mode will be activated.

Figure 19:
DTest1_A and DTest2_B

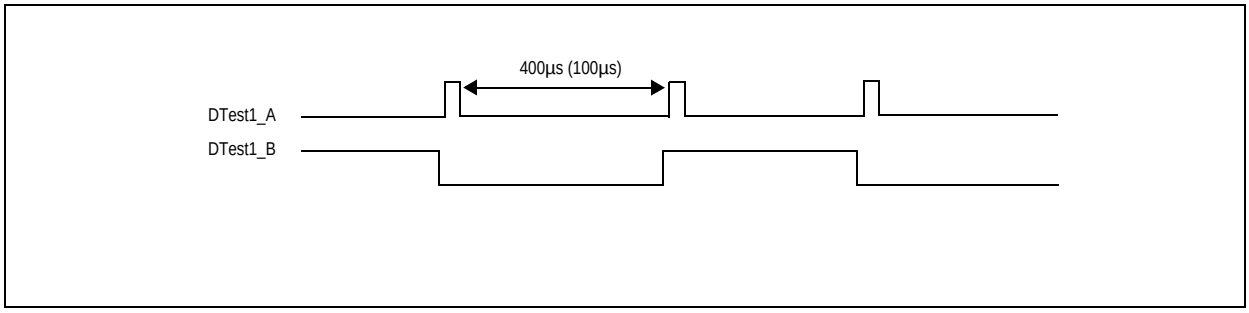

Every rising edge at DTEST1_A indicates that new data in the device is available. With this signal it is possible to trigger an external customer microcontroller (interrupt) and start the SSI readout. DTEST2_B indicates the phase of available data.

Sine/Cosine Mode

This mode can be enabled by setting the OTP Factory-bit FS2. If this mode is activated the 16-bit sine and 16-bit cosine digital data of both channels will be switched out. Due to the high resolution of 16 bits of the data stream an accurate calculation can be done externally. In this mode the open drain outputs of DTEST1_A and DTEST2_B are switched to push-pull mode. At pin MagDECn the clock impulse, at pin MagINCn the Enable pulse will be switched out. The pin PWM indicates, which phase of signal is being presented. The mode is not available in the default mode.

Downloaded from Arrow.com.

Daisy Chain Mode

The daisy chain mode allows connection of several AS5145s in series, while still keeping just one digital input for data transfer (see "Data IN" in Figure 20). This mode is accomplished by connecting the data output (DO; pin 9) to the data input (PDIO; pin 8) of the subsequent device. The serial data of all connected devices is read from the DO pin of the first device in the chain. The length of the serial bit stream increases with every connected device, it is n * (18+1) bits: n= number of devices. e.g. 38-bit for two devices, 57-bit for three devices, etc.

The last data bit of the first device (Parity) is followed by a dummy bit and the first data bit of the second device (D11), etc. (see Figure 21).

Figure 20:
Daisy Chain Hardware Configuration

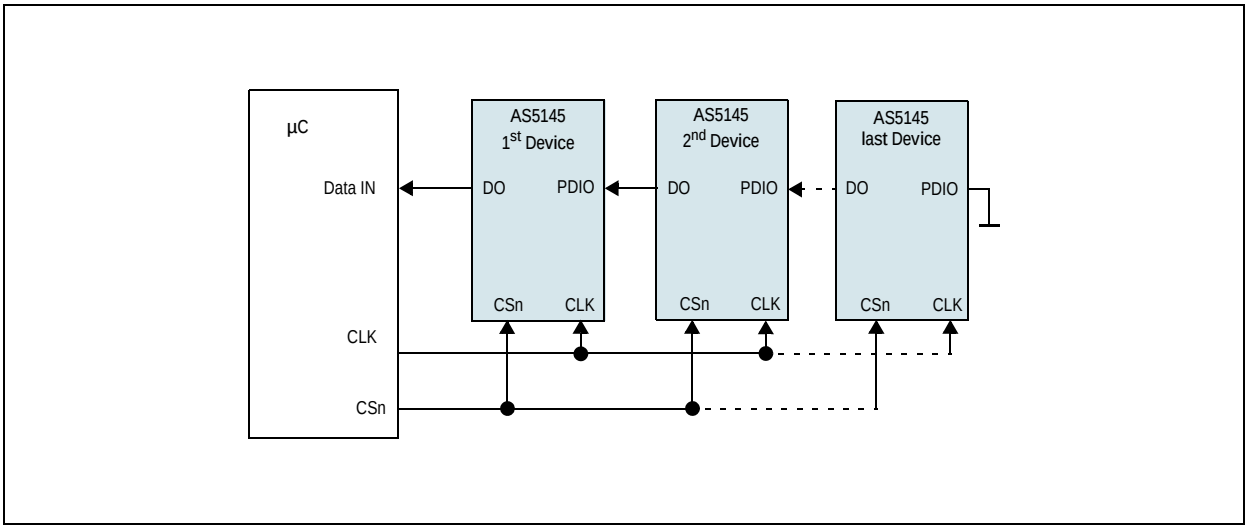

Figure 21:
Daisy Chain Mode Data Transfer

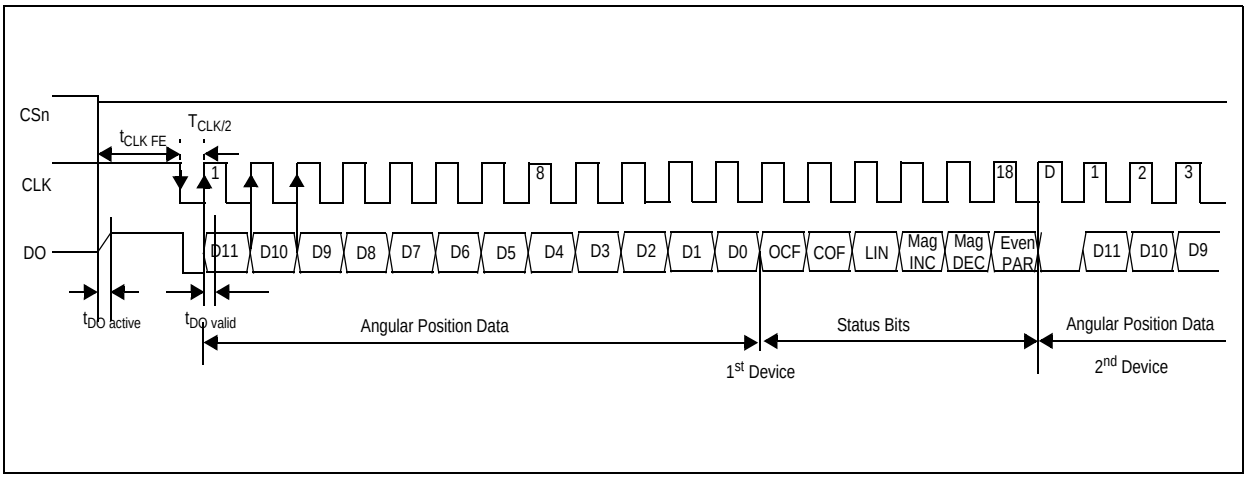

Downloaded from Arrow.com.

Pulse Width Modulation (PWM) Output

The AS5145 provides a pulse width modulated output (PWM), whose duty cycle is proportional to the measured angle. For angle position 0 to 4094

(EQ1) $$\text{Position} = \frac{t_{on} \cdot 4098}{(t_{on} + t_{off})} - 1$$

Examples:

1. An angle position of 180° will generate a pulse width ton = 2049µs and a pause toff of 2049 µs resulting in Position = 2048 after the calculation:
   2049 * 4098 / (2049 + 2049) -1 = 2048
2. An angle position of 359.8° will generate a pulse width ton = 4095µs and a pause toff of 3 µs resulting in Position = 4094 after the calculation:
   4095 * 4098 / (4095 + 3) -1 = 4094

Exception:

1. An angle position of 359.9° will generate a pulse width ton = 4097µs and a pause toff of 1 µs resulting in Position = 4096 after the calculation:
   4097 * 4098 / (4097 + 1) -1 = 4096

The PWM frequency is internally trimmed to an accuracy of ±5% (±10% over full temperature range). This tolerance can be cancelled by measuring the complete duty cycle as shown above.

Figure 22:
PWM Output Signal

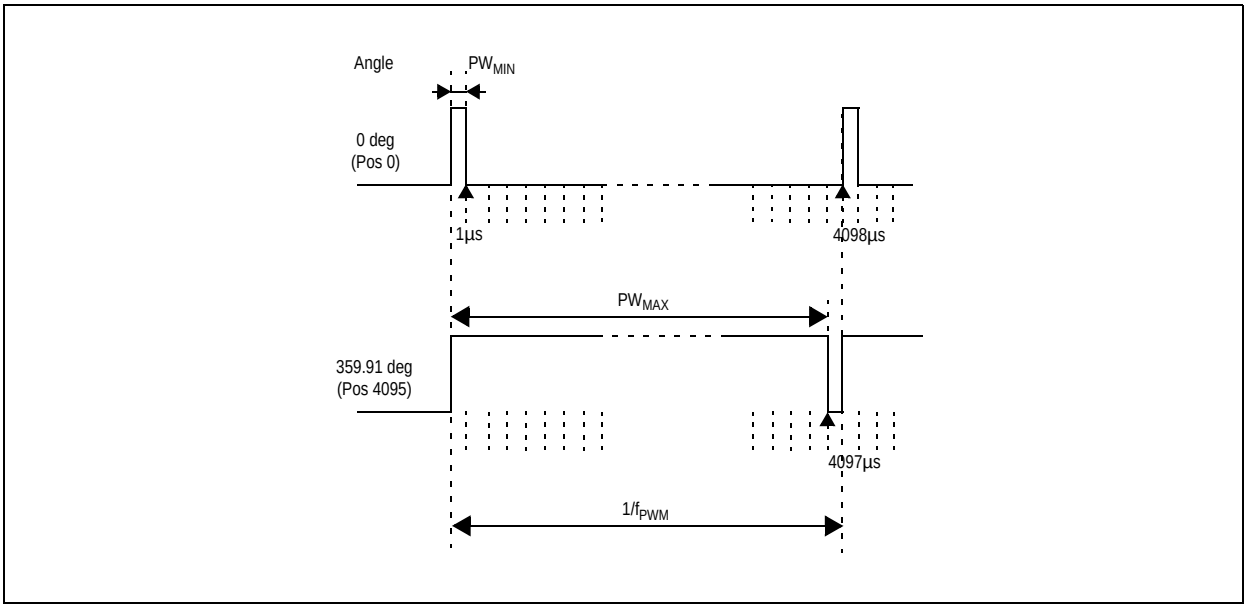

Downloaded from Arrow.com.

Changing the PWM Frequency

The PWM frequency of the AS5145 can be divided by two by setting a bit (PWMhalfEN) in the OTP register (see Programming the AS5145). With PWMhalfEN = 0 the PWM timing is as shown in Figure 23:

Figure 23:
PWM Signal Parameters (Default Mode)

Symbol	Parameter	Typ	Unit	Note
f_{PWM}	PWM frequency	244	Hz	Signal period: 4097µs
PW_{MIN}	MIN pulse width	1	µs	• Position 0d • Angle 0deg
PW_{MAX}	MAX pulse width	4097	µs	• Position 4095d • Angle 359.91deg

When PWMhalfEN = 1, the PWM timing is as shown in Figure 24:

Figure 24:
PWM Signal Parameters with Half Frequency (OTP Option)

Symbol	Parameter	Typ	Unit	Note
f_{PWM}	PWM frequency	122	Hz	Signal period: 8194µs
PW_{MIN}	MIN pulse width	2	µs	• Position 0d • Angle 0deg
PW_{MAX}	MAX pulse width	8194	µs	• Position 4095d • Angle 359.91deg

Downloaded from Arrow.com.

Analog Output

An analog output can be generated by averaging the PWM signal, using an external active or passive low pass filter. The analog output voltage is proportional to the angle: 0º= 0V; 360º = VDD5V.

Using this method, the AS5145 can be used as direct replacement of potentiometers.

Figure 25:
Simple 2nd Order Passive RC Low Pass Filter

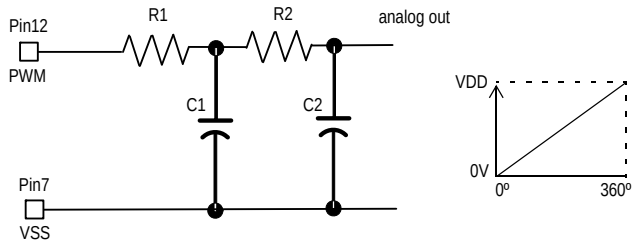

Figure 25 shows an example of a simple passive low pass filter to generate the analog output.

(EQ2) $R1, R2 \geq 10k\Omega \qquad C1, C2 \geq 2.2\mu F / 6V$

R1 should be greater than or equal to 4k7 to avoid loading of the PWM output. Larger values of Rx and Cx will provide better filtering and less ripple, but will also slow down the response time.

Downloaded from Arrow.com.

Application Information

The benefits of AS5145 are as follows:

- Complete system-on-chip
- Flexible system solution provides absolute and PWM outputs simultaneously
- Ideal for applications in harsh environments due to contactless position sensing
- No calibration required
- No temperature compensation necessary

Programming the AS5145

After power-on, programming the AS5145 is enabled with the rising edge of CSn with PDIO = high and CLK = low.

The AS5145 programming is a one-time-programming (OTP) method, based on poly silicon fuses. The advantage of this method is that a programming voltage of only 3.3V to 3.6V is required for programming (either with 3.3V or 5V supply).

The OTP consists of 52 bits, of which 21 bits are available for user programming. The remaining 31 bits contain factory settings and a unique chip identifier (Chip-ID).

A single OTP cell can be programmed only once. Per default, the cell is “0”; a programmed cell will contain a “1”. While it is not possible to reset a programmed bit from “1” to “0”, multiple OTP writes are possible, as long as only unprogrammed “0”-bits are programmed to “1”.

Independent of the OTP programming, it is possible to overwrite the OTP register temporarily with an OTP write command at any time. This setting will be cleared and overwritten with the hard programmed OTP settings at each power-up sequence or by a LOAD operation. Use **application note AN514X_10** to get more information about the programming options.

The OTP memory can be accessed in the following ways:

- **Load Operation:** The Load operation reads the OTP fuses and loads the contents into the OTP register. A Load operation is automatically executed after each power-on-reset.
- **Write Operation:** The Write operation allows a temporary modification of the OTP register. It does not program the OTP. This operation can be invoked multiple times and will remain set while the chip is supplied with power and while the OTP register is not modified with another Write or Load operation.
- **Read Operation:** The Read operation reads the contents of the OTP register, for example to verify a Write command or to read the OTP memory after a Load command.
- **Program Operation:** The Program operation writes the contents of the OTP register permanently into the OTP ROM.

Downloaded from Arrow.com.

- **Analog Readback Operation:** The Analog Readback operation allows a quantifiable verification of the programming. For each programmed or unprogrammed bit, there is a representative analog value (in essence, a resistor value) that is read to verify whether a bit has been successfully programmed or not.

Zero Position Programming

Zero position programming is an OTP option that simplifies assembly of a system, as the magnet does not need to be manually adjusted to the mechanical zero position. Once the assembly is completed, the mechanical and electrical zero positions can be matched by software. Any position within a full turn can be defined as the permanent new zero position.

For zero position programming, the magnet is turned to the mechanical zero position (e.g. the "off"-position of a rotary switch) and the actual angular value is read.

This value is written into the OTP register bits Z35:Z46 (see Figure 28).

Note(s): The zero position value can also be modified before programming, e.g. to program an electrical zero position that is 180° (half turn) from the mechanical zero position, just add 2048 to the value read at the mechanical zero position and program the new value into the OTP register.

Downloaded from Arrow.com.

OTP Memory Assignment

Figure 26:
OTP Bit Assignment

Bit	Symbol	Function	
	mbit1	Factory Bit 1	
51	PWMhalfEN_Index width	PMW frequency Index pulse width	Customer Section
50	MagCompEn	Alarm mode (programmed by **ams** to 1)	
49	pwmDIS	Disable PWM	
48	Output Md0	Default, 10-bit inc, 12-bit inc Sync mode	
47	Output Md1		
46	Z0	12-bit Zero Position	
:	:		
35	Z11		
34	CCW	Direction	
33	RA0	Redundancy Address	
:	:		
29	RA4		
28	FS 0	Factory Bit	Factory Section
27	FS 1		
26	FS 2		
25	FS 3		
24	FS 4		
23	FS 5		
:	:		
20	FS 8		
19	FS 9		
18	FS 10		

Downloaded from Arrow.com.

Bit	Symbol	Function	
17	ChipID0	18-bit Chip ID	ID Section
16	ChipID1		
:	:		
0	ChipID17		
	mbit0	Factory Bit 0	

User Selectable Settings

The AS5145 allows programming of the following user selectable options:

- **PWMhalfEN_Indexwidth**: Setting this bit, the PWM pulse will be divided by 2, in case of quadrature incremental mode A/B/Index setting of index impulse width from 1 LSB to 3LSB
- **Output Md0:** Setting this bit enables sync- or 10-bit incremental mode (see Figure 16).
- **Output Md1:** Setting this bit enables sync- or 12-bit incremental mode (see Figure 16).
- **Z [11:0]:** Programmable Zero / Index Position
- **CCW:** Counter Clockwise Bit
  ccw=0 – angular value increases in clockwise direction
  ccw=1 – angular value increases in counterclockwise direction
- **RA [4:0]:** Redundant Address: an OTP bit location addressed by this address is always set to "1" independent of the corresponding original OTP bit setting

OTP Default Setting

The AS5145 can also be operated without programming. The default, un-programmed setting is:

- **Output Md0, Output MD1:** 00= Default mode
- **Z0 to Z11:** 00 = no programmed zero position
- **CCW:** 0 = clockwise operation
- **RA4 to RA0:**0 = no OTP bit is selected
- **MagCompEN:** 1 = The green/yellow Mode is enabled

Downloaded from Arrow.com.

Redundancy

For a better programming reliability a redundancy is implemented. In case when the programming of one bit failed this function can be used. With an address RA(4:0) one bit can be selected and programmed.

Figure 27:
Redundancy Addressing

Address	PWMhalfEN_Indexwidth	MagCompEN	pwmDIS	Output Md0	Output Md1	Z0	Z1	Z2	Z3	Z4	Z5	Z6	Z7	Z8	Z9	Z10	Z11	CCW
00000	0	0	0	0	0	0	0	0	0	0	0	0	0	0	0	0	0	0
00001	**1**	0	0	0	0	0	0	0	0	0	0	0	0	0	0	0	0	0
00010	0	**1**	0	0	0	0	0	0	0	0	0	0	0	0	0	0	0	0
00011	0	0	**1**	0	0	0	0	0	0	0	0	0	0	0	0	0	0	0
00100	0	0	0	**1**	0	0	0	0	0	0	0	0	0	0	0	0	0	0
00101	0	0	0	0	**1**	0	0	0	0	0	0	0	0	0	0	0	0	0
00110	0	0	0	0	0	**1**	0	0	0	0	0	0	0	0	0	0	0	0
00111	0	0	0	0	0	0	**1**	0	0	0	0	0	0	0	0	0	0	0
01000	0	0	0	0	0	0	0	**1**	0	0	0	0	0	0	0	0	0	0
01001	0	0	0	0	0	0	0	0	**1**	0	0	0	0	0	0	0	0	0
01010	0	0	0	0	0	0	0	0	0	**1**	0	0	0	0	0	0	0	0
01011	0	0	0	0	0	0	0	0	0	0	**1**	0	0	0	0	0	0	0
01100	0	0	0	0	0	0	0	0	0	0	0	**1**	0	0	0	0	0	0
01101	0	0	0	0	0	0	0	0	0	0	0	0	**1**	0	0	0	0	0
01110	0	0	0	0	0	0	0	0	0	0	0	0	0	**1**	0	0	0	0
01111	0	0	0	0	0	0	0	0	0	0	0	0	0	0	**1**	0	0	0
10000	0	0	0	0	0	0	0	0	0	0	0	0	0	0	0	**1**	0	0
10001	0	0	0	0	0	0	0	0	0	0	0	0	0	0	0	0	**1**	0
10010	0	0	0	0	0	0	0	0	0	0	0	0	0	0	0	0	0	**1**
10101	**1**	**1**	**1**	**1**	**1**	**1**	**1**	**1**	**1**	**1**	**1**	**1**	**1**	**1**	**1**	**1**	**1**	**1**

Downloaded from Arrow.com.

Redundant Programming Option

In addition to the regular programming, a redundant programming option is available. This option allows that one selectable OTP bit can be set to "1" (programmed state) by writing the location of that bit into a 5-bit address decoder. This address can be stored in bits RA4...RA0 in the OTP user settings.

Example: setting RA4…0 to "00001" will select bit 51 = PWhalfEN_Indexwidth, "00010" selects bit 50 = MagCompEN, "10010" selects bit 34 =CCW, etc.

OTP Register Entry and Exit Condition

For timing options, refer to Programming the AS5145.

Figure 28:
OTP Access Timing Diagram

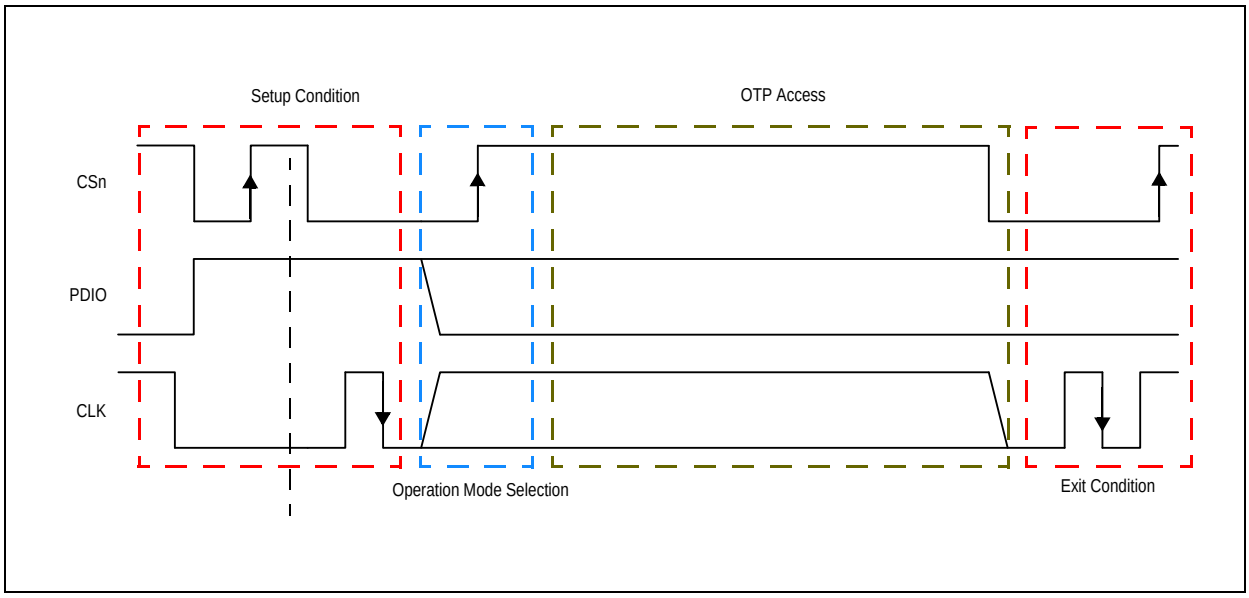

To avoid accidental modification of the OTP during normal operation, each OTP access (Load, Write, Read, Program) requires a defined entry and exit procedure, using the CSn, PDIO and CLK signals as shown in Figure 28.

Downloaded from Arrow.com.

Figure 29:
OTP Programming Connection

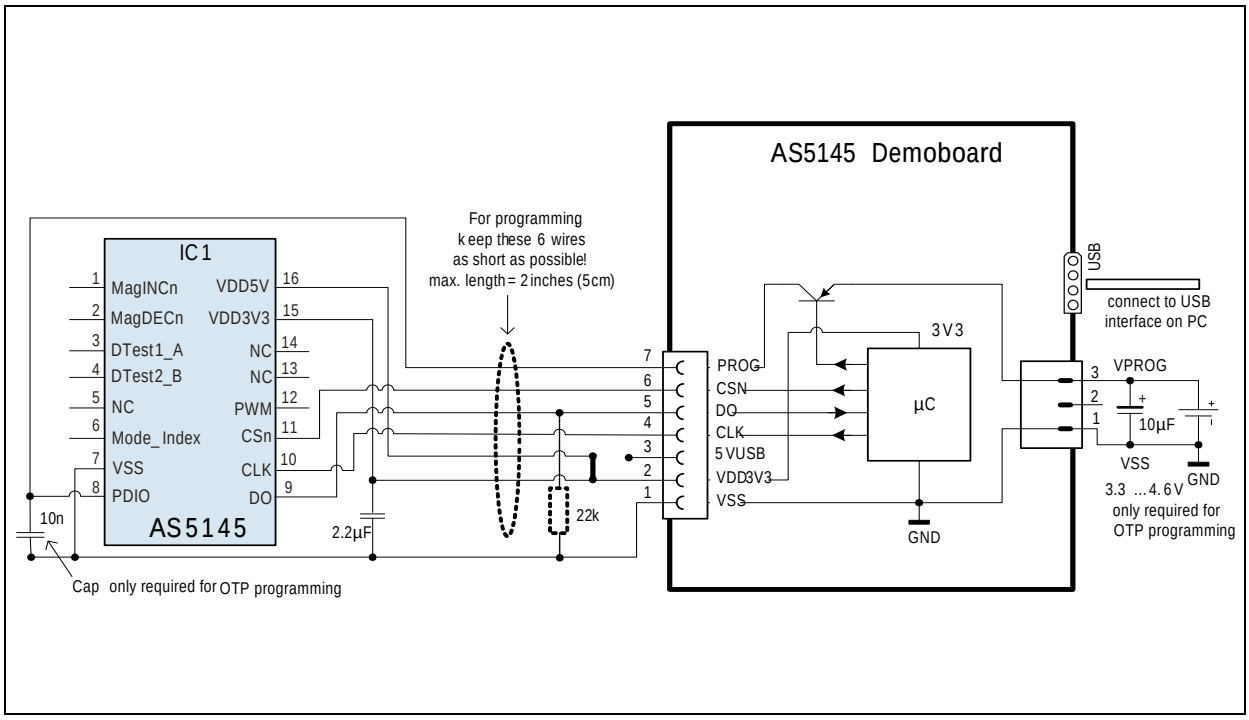

Alignment Mode

The alignment mode simplifies centering the magnet over the center of the chip to gain maximum accuracy.

Alignment mode can be enabled with the falling edge of CSn while PDIO = logic high (see Figure 30). The Data bits D11-D0 of the SSI change to a 12-bit displacement amplitude output. A high value indicates large X or Y displacement, but also higher absolute magnetic field strength. The magnet is properly aligned, when the difference between highest and lowest value over one full turn is at a minimum.

Under normal conditions, a properly aligned magnet will result in a reading of less than 128 over a full turn.
The MagINCn and MagDECn indicators will be = 1 when the alignment mode reading is < 128. At the same time, both hardware pins MagINCn (#1) and MagDECn (#2) will be pulled to VSS. A properly aligned magnet will therefore produce a MagINCn = MagDECn = 1 signal throughout a full 360° turn of the magnet.

Stronger magnets or short gaps between magnet and IC will show values larger than 128. These magnets are still properly aligned as long as the difference between highest and lowest value over one full turn is at a minimum.

The Alignment mode can be reset to normal operation by a power-on-reset (disconnect / re-connect power supply) or by a falling edge on CSn with PDIO = low.

Downloaded from Arrow.com.

Figure 30:
Enabling the Alignment Mode

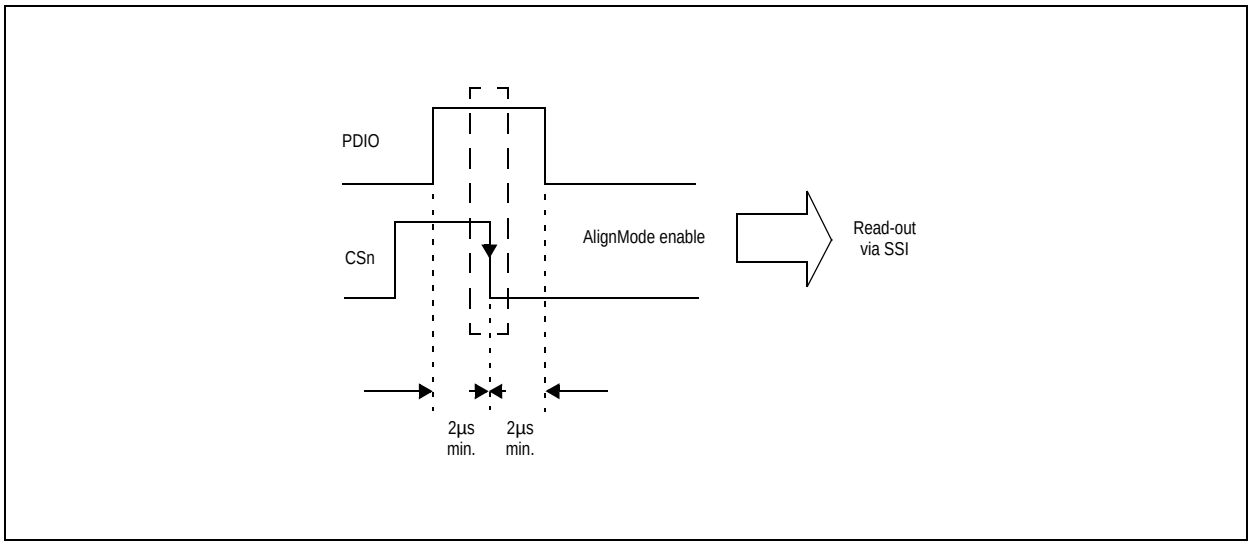

Figure 31:
Exiting Alignment Mode

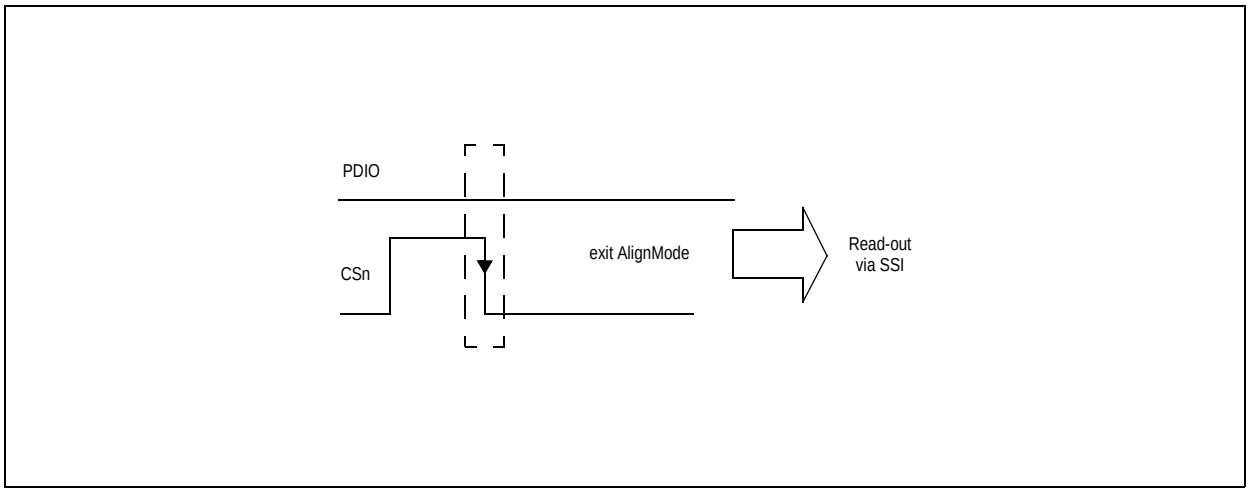

Downloaded from Arrow.com.

3.3V / 5V Operation

The AS5145 operates either at 3.3V ±10% or at 5V ±10%. This is made possible by an internal 3.3V Low-Dropout (LDO) Voltage regulator. The internal supply voltage is always taken from the output of the LDO, meaning that the internal blocks are always operating at 3.3V.

For 3.3V operation, the LDO must be bypassed by connecting VDD3V3 with VDD5V (see Figure 32).

For 5V operation, the 5V supply is connected to pin VDD5V, while VDD3V3 (LDO output) must be buffered by a 1µF to 10µF capacitor, which is supposed to be placed close to the supply pin (see Figure 32) with recommended 2.2µF).

Note(s): The VDD3V3 output is intended for internal use only It must not be loaded with an external load.

The output voltage of the digital interface I/O's corresponds to the voltage at pin VDD5V, as the I/O buffers are supplied from this pin.

Figure 32:
Connections for 5V / 3.3V Supply Voltages

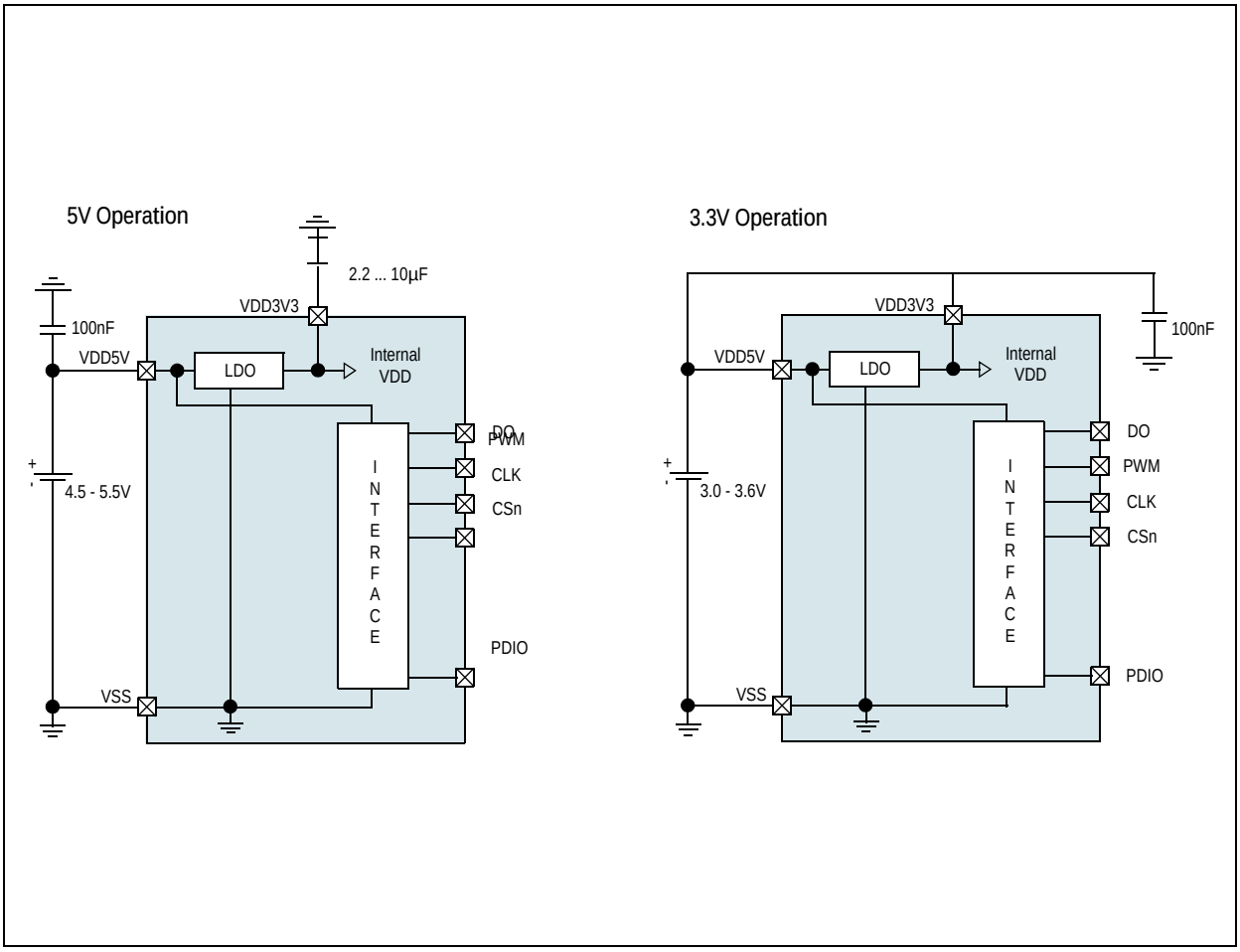

Downloaded from Arrow.com.

A buffer capacitor of 100nF is recommended in both cases close to pin VDD 5V. Note that pin VDD 3V3 must always be buffered by a capacitor. It must not be left floating, as this may cause an instable internal 3.3V supply voltage which can lead to larger than normal jitter of the measured angle.

Selecting Proper Magnet

Typically the magnet is 6mm in diameter and 2.5mm in height. Magnetic materials such as rare earth AlNiCo/SmCo5 or NdFeB are recommended. The magnetic field strength perpendicular to the die surface has to be in the range of ±45mT to ±75mT (peak).

The magnet's field strength is verified using a gauss-meter. The magnetic field Bv at a given distance, along a concentric circle with a radius of 1.1mm (R1) is in the range of ±45mT to ±75mT(see Figure 33).

Figure 33:
Typical Magnet (6x3mm) and Magnetic Field Distribution

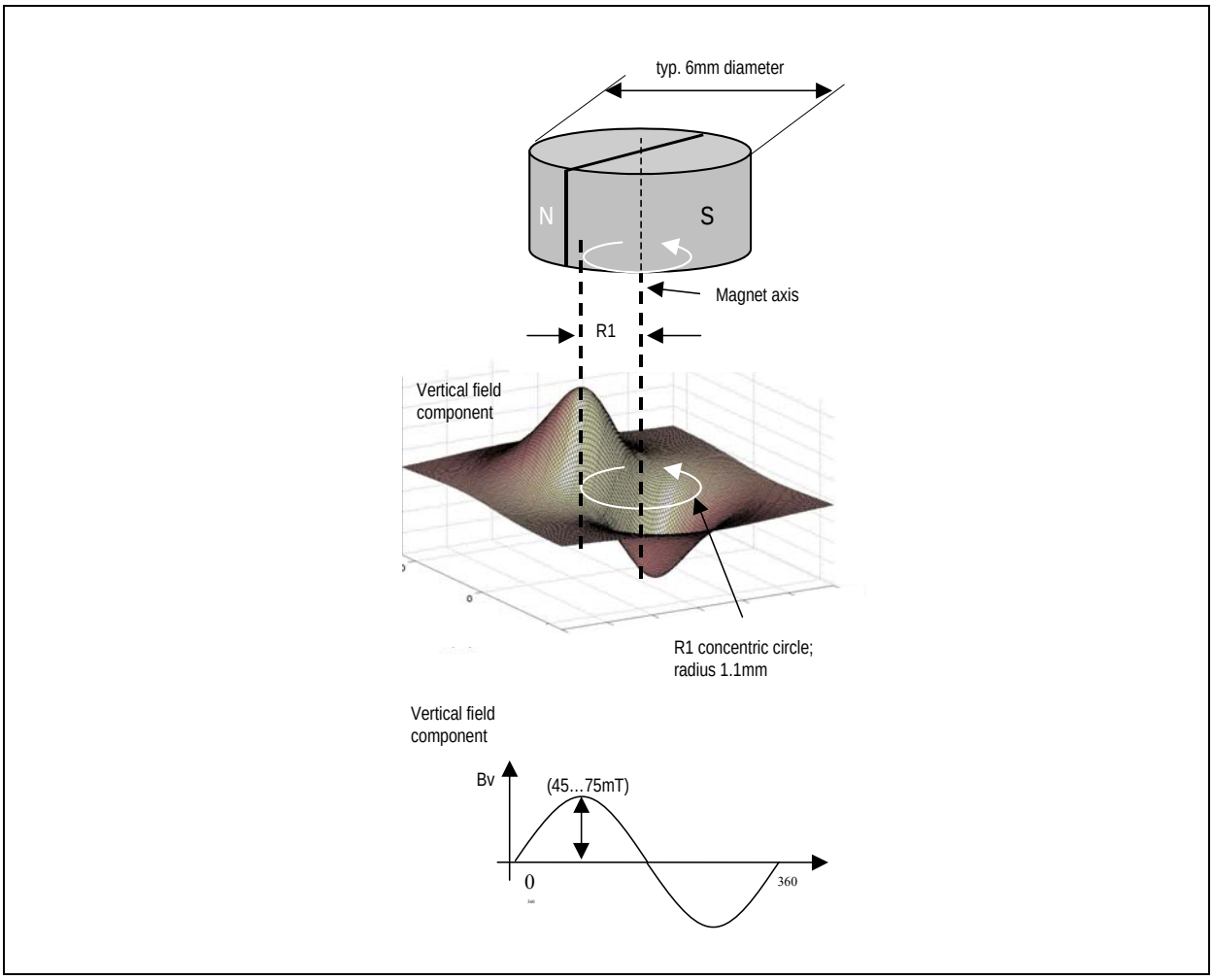

Downloaded from Arrow.com.

Physical Placement of the Magnet

The best linearity can be achieved by placing the center of the magnet exactly over the defined center of the chip as shown in the drawing below:

Figure 34:
Defined Chip Center and Magnet Displacement Radius

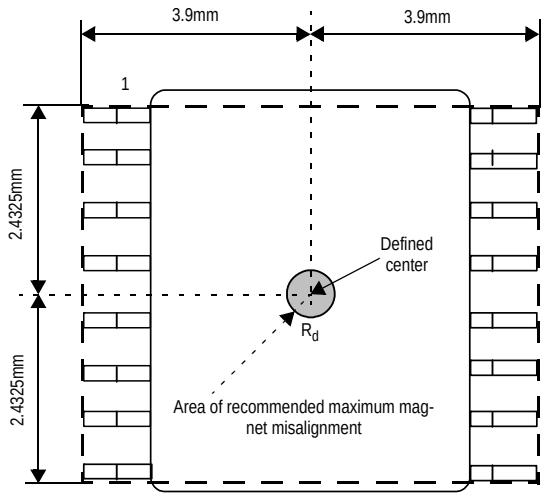

Magnet Placement

The magnet's center axis must be aligned within a displacement radius Rd of 0.25mm from the defined center of the IC. The magnet can be placed below or above the device. The distance can be chosen such that the magnetic field on the die surface is within the specified limits (see Figure 34). The typical distance "z" between the magnet and the package surface is 0.5mm to 1.5mm, provided the use of the recommended magnet material and dimensions (6mm x 3mm). Larger distances are possible, as long as the required magnetic field strength stays within the defined limits.

A magnetic field outside the specified range still can be detected by the chip. But the out-of-range condition will be indicated by MagINCn (pin 1) and MagDECn (pin 2), (see Figure 4).

Downloaded from Arrow.com.

Failure Diagnostics

The AS5145 also offers several diagnostic and failure detection features:

Magnetic Field Strength Diagnosis

By software: the MagINC and MagDEC status bits will both be high when the magnetic field is out of range.

By hardware: Pins #1 (MagINCn) and #2 (MagDECn) are open-drain outputs and will both be turned on (= low with external pull-up resistor) when the magnetic field is out of range. If only one of the outputs are low, the magnet is either moving towards the chip (MagINCn) or away from the chip (MagDECn).

Power Supply Failure Detection

By software: If the power supply to the AS5145 is interrupted, the digital data read by the SSI will be all "0"s. Data is only valid, when bit OCF is high, hence a data stream with all "0"s is invalid. To ensure adequate low levels in the failure case, a pull-down resistor (~10kΩ) must be added between pin DIO and VSS at the receiving side.

By hardware: The MagINCn and MagDECn pins are open drain outputs and require external pull-up resistors. In normal operation, these pins are high ohmic and the outputs are high (see Figure 15). In a failure case, either when the magnetic field is out of range of the power supply is missing, these outputs will become low. To ensure adequate low levels in case of a broken power supply to the AS5145, the pull-up resistors (~10kΩ) from each pin must be connected to the positive supply at pin 16 (VDD5V).

By hardware: PWM output: The PWM output is a constant stream of pulses with 1kHz repetition frequency. In case of power loss, these pulses are missing.

Downloaded from Arrow.com.

Angular Output Tolerances

Accuracy

Accuracy is defined as the error between measured angle and actual angle. It is influenced by several factors:

- The non-linearity of the analog-digital converters
- Internal gain and mismatch errors
- Non-linearity due to misalignment of the magnet

As a sum of all these errors, the accuracy with centered magnet = (Errmax – Errmin)/2 is specified as better than ±0.5 degrees @ 25°C (see Figure 36).

Misalignment of the magnet further reduces the accuracy. Figure 35 shows an example of a 3D-graph displaying non-linearity over XY-misalignment. The center of the square XY-area corresponds to a centered magnet (see dot in the center of the graph). The X- and Y- axis extends to a misalignment of ±1mm in both directions. The total misalignment area of the graph covers a square of 2x2mm (79x79mil) with a step size of 100µm.

For each misalignment step, the measurement as shown in Figure 36 is repeated and the accuracy (Errmax – Errmin)/2 (e.g. 0.25° in Figure 36) is entered as the Z-axis in the 3D-graph.

Figure 35:
Example of Linearity Error Over XY Misalignment

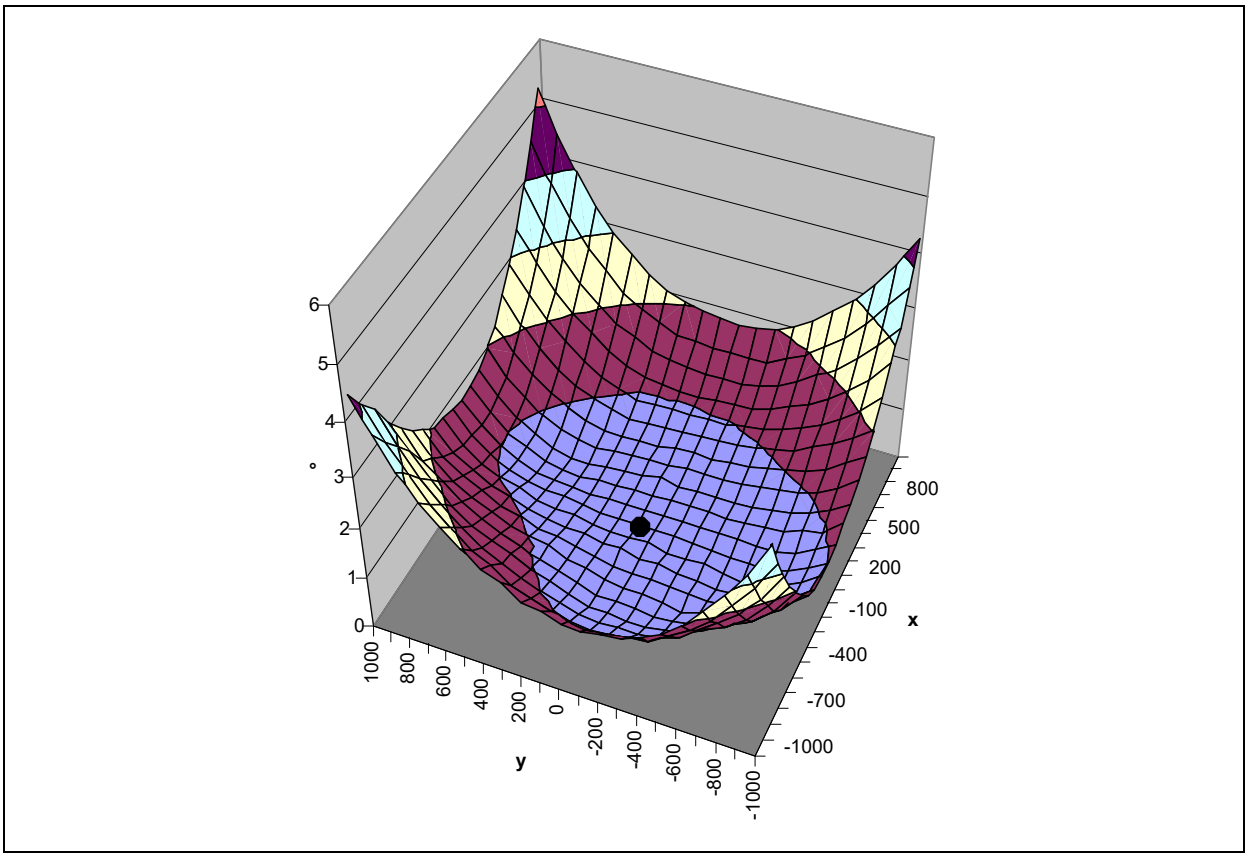

Downloaded from Arrow.com.

The maximum non-linearity error on this example is better than ±1 degree (inner circle) over a misalignment radius of ~0.7mm. For volume production, the placement tolerance of the IC within the package (±0.235mm) must also be taken into account.

The total nonlinearity error over process tolerances, temperature and a misalignment circle radius of 0.25mm is specified better than ±1.4 degrees. The magnet used for this measurement was a cylindrical NdFeB (Bomatec® BMN-35H) magnet with 6mm diameter and 2.5mm in height.

Figure 36:
Example of Linearity Error Over 360°

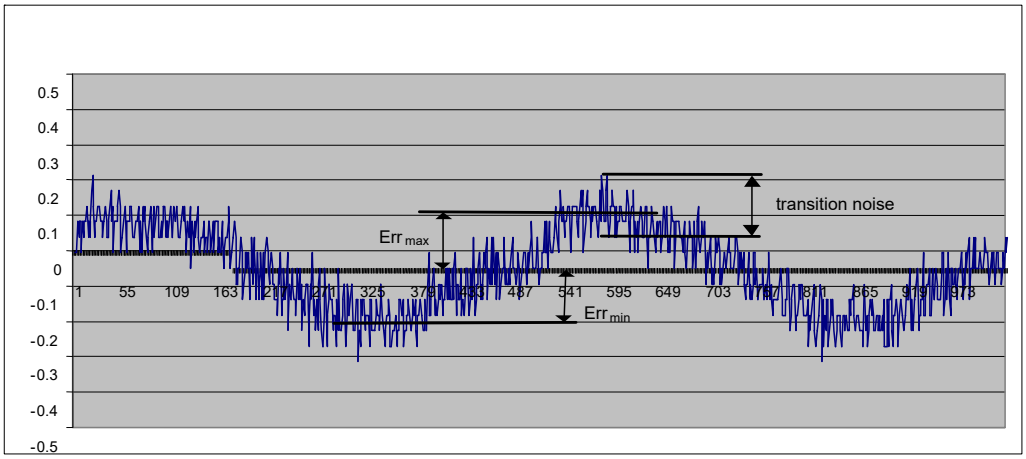

Transition Noise

Transition noise is defined as the jitter in the transition between two steps. Due to the nature of the measurement principle (Hall sensors + Preamplifier + ADC), there is always a certain degree of noise involved. This transition noise voltage results in an angular transition noise at the outputs. It is specified as 0.06 degrees rms (1 sigma)x1 in fast mode (pin MODE = high) and 0.03 degrees rms (1 sigma)x1 in slow mode (pin MODE = low or open).

This is the repeatability of an indicated angle at a given mechanical position. The transition noise has different implications on the type of output that is used:

- **Absolute Output; SSI Interface:** The transition noise of the absolute output can be reduced by the user by implementing averaging of readings. An averaging of 4 readings will reduce the transition noise by 6dB or 50%, e.g. from 0.03°rms to 0.015°rms (1 sigma) in slow mode.

Downloaded from Arrow.com.

- **PWM Interface:** If the PWM interface is used as an analog output by adding a low pass filter, the transition noise can be reduced by lowering the cutoff frequency of the filter. If the PWM interface is used as a digital interface with a counter at the receiving side, the transition noise can be further reduced by averaging of readings.
- **Incremental Mode:** In incremental mode, the transition noise influences the period, width and phase shift of the output signals A, B and Index. However, the algorithm used to generate the incremental outputs guarantees no missing or additional pulses even at high speeds (up to 15,000 rpm and higher).

Note(s): Statistically, 1 sigma represents 68.27% of readings and 3 sigma represents 99.73% of readings.

High Speed Operation

- **Sampling Rate:** The AS5145 samples the angular value at a rate of 2.61k (slow mode) or 10.42k (fast mode, selectable by pin MODE) samples per second. Consequently, the absolute outputs are updated each 384µs (96µs in fast mode). At a stationary position of the magnet, the sampling rate creates no additional error.
- **Absolute Mode:** At a sampling rate of 2.6kHz/10.4kHz, the number of samples (n) per turn for a magnet rotating at high speed can be calculated by

(EQ3)
$$n_{slowmode} = \frac{60}{rpm \cdot (384)\mu s}$$

(EQ4)
$$n_{fastmode} = \frac{60}{rmp \cdot 96\mu s}$$

The upper speed limit in slow mode is ~6,000 rpm and ~30,000 rpm in fast mode. The only restriction at high speed is that there will be fewer samples per revolution as the speed increases (see Figure 12). Regardless of the rotational speed, the absolute angular value is always sampled at the highest resolution of 12-bit.

- **Incremental Mode:** Incremental encoders are usually required to produce no missing pulses up to several thousand rpm. Therefore, the AS5145 has a built-in interpolator, which ensures that there are no missing pulses at the incremental outputs for rotational speeds of up to 15,000 rpm, even at the highest resolution of 12 bits (4096 pulses per revolution).

Downloaded from Arrow.com.

Propagation Delays

The propagation delay is the delay between the time that the sample is taken until it is converted and available as angular data. This delay is 96µs in fast mode and 384µs in slow mode.

Using the SSI interface for absolute data transmission, an additional delay must be considered, caused by the asynchronous sampling (0 … 1/fsample) and the time it takes the external control unit to read and process the angular data from the chip (maximum clock rate = 1MHz, number of bits per reading = 18).

Angular Error Caused by Propagation Delay

A rotating magnet will cause an angular error caused by the output propagation delay.

This error increases linearly with speed:

(EQ5) $e_{sampling}$ = rpm * 6 * prop.delay

where:

esampling = angular error [°]
rpm = rotating speed [rpm]
prop.delay = propagation delay [seconds]

Note(s): Since the propagation delay is known, it can be automatically compensated by the control unit processing the data from the AS5145.

Internal Timing Tolerance

The AS5145 does not require an external ceramic resonator or quartz. All internal clock timings for the AS5145 are generated by an on-chip RC oscillator. This oscillator is factory trimmed to ±5% accuracy at room temperature (±10% over full temperature range). This tolerance influences the ADC sampling rate and the pulse width of the PWM output:

- Absolute output; SSI interface: A new angular value is updated every 96µs (typ) in fast mode and every 384µs (typ) in slow mode.
- PWM output: A new angular value is updated every 384µs (typ). The PWM pulse timings T_{on} and T_{off} also have the same tolerance as the internal oscillator. If only the PWM pulse width Ton is used to measure the angle, the resulting value also has this timing tolerance. However, this tolerance can be cancelled by measuring both Ton and T_{off} and calculating the angle from the duty cycle (see Pulse Width Modulation (PWM) Output)

(EQ6) $$\text{Position} = \frac{t_{on} \cdot 4097}{(t_{on} + t_{off})} - 1$$

Downloaded from Arrow.com.

Temperature

Magnetic Temperature Coefficient. One of the major benefits of the AS5145 compared to linear Hall sensors is that it is much less sensitive to temperature. While linear Hall sensors require a compensation of the magnet's temperature coefficients, the AS5145 automatically compensates for the varying magnetic field strength over temperature. The magnet's temperature drift does not need to be considered, as the AS5145 operates with magnetic field strengths from ±45mT to ±75mT.

Example: A NdFeB magnet has a field strength of 75mT @ –40°C and a temperature coefficient of -0.12% per Kelvin. The temperature change is from -40°C to 125°C = 165K.The magnetic field change is: 165 x -0.12% = -19.8%, which corresponds to 75mT at -40°C and 60mT at 125°C.

The AS5145 can compensate for this temperature related field strength change automatically, no user adjustment is required.

Accuracy Over Temperature

The influence of temperature in the absolute accuracy is very low. While the accuracy is less than or equal to ±0.5° at room temperature, it can increase to less than or equal to ±0.9° due to increasing noise at high temperatures.

Timing Tolerance Over Temperature. The internal RC oscillator is factory trimmed to ±5%. Over temperature, this tolerance can increase to ±10%. Generally, the timing tolerance has no influence in the accuracy or resolution of the system, as it is used mainly for internal clock generation.

The only concern to the user is the width of the PWM output pulse, which relates directly to the timing tolerance of the internal oscillator. This influence however can be cancelled by measuring the complete PWM duty cycle instead of just the PWM pulse.

Downloaded from Arrow.com.

Differences Between AS5145H, AS5145A and AS5145B

Figure 37:
Functional Differences

Function	AS5145H	AS5145A	AS5145B
Filtering mode	Selectable by customer via Mode pin (see Figure 12)	Pre-defined to Fast mode	
Mode_Index pin	Input. Must be set hard wired on PCB	Output	Output
Incremental mode setting	Default disabled. Can be enabled by customer via programming	Pre-defined to 2x256 ppr low-jitter (10-bit)	Pre-defined to 2x1024 ppr (12-bit)
Resolution absolute angle output (PWM and SSI)	12-Bit angle		

Downloaded from Arrow.com.

Package Drawings & Markings

The device is available in SSOP 16 (5.3mm x 6.2mm).

Figure 38:
Package Drawings and Dimensions

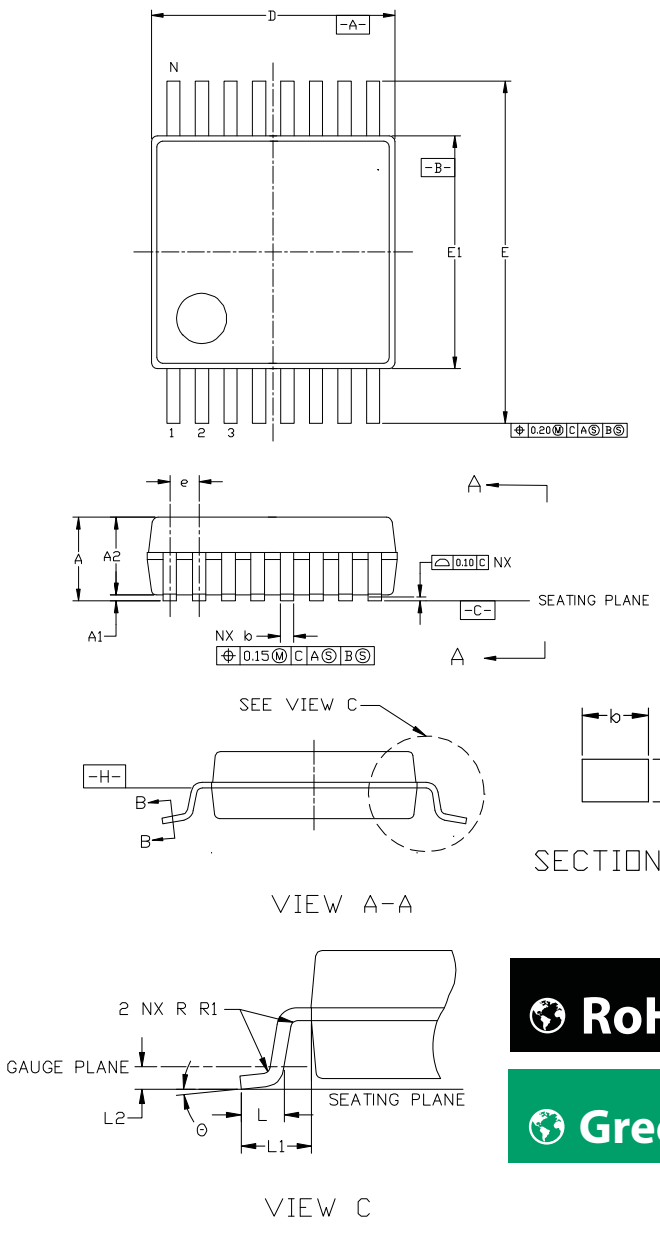

Symbol	Min	Nom	Max
A	1.73	1.86	1.99
A1	0.05	0.13	0.21
A2	1.68	1.73	1.78
b	0.22	0.315	0.38
c	0.09	0.17	0.25
D	5.90	6.20	6.50
E	7.40	7.80	8.20
E1	5.00	5.30	5.60
e	-	0.65 BSC	-
L	0.55	0.75	0.95
L1	-	1.25 REF	-
L2	-	0.25 BSC	-
R	0.09	-	-
Q	0°	4°	8°
N	16		

Note(s):

1. Dimensions and tolerancing conform to *ASME Y14.5M-1994*.
2. All dimensions are in millimeters. Angles are in degrees.

Figure 39:
Package Code: YYWWMZZ

YY	WW	M	ZZ	@
Manufacturing year	Manufacturing week	Plant identifier	Assembly traceability code	Sublot identifier

Downloaded from Arrow.com.

Figure 40:
Vertical Cross Section of SSOP-16

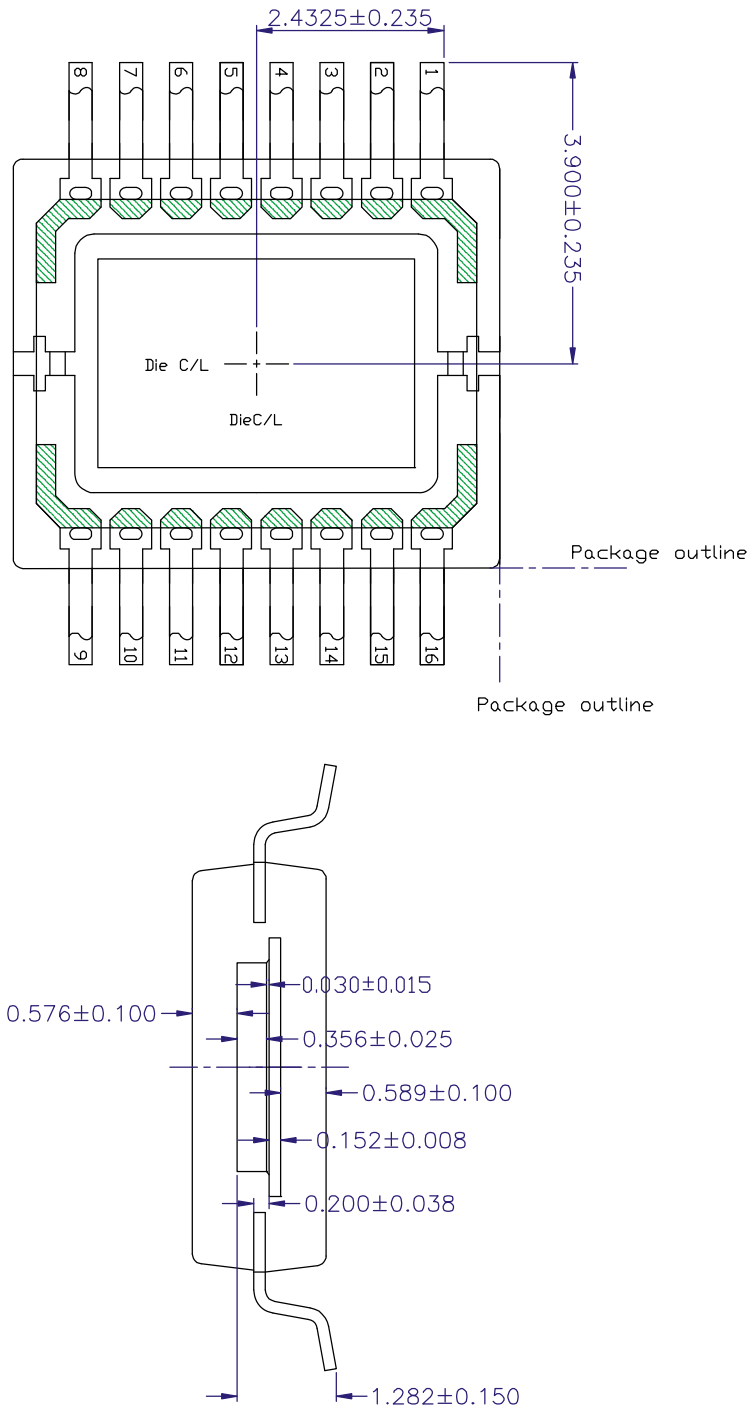

Note(s):

1. All dimensions in mm.

Downloaded from Arrow.com.

Recommended PCB Footprint

Figure 41:
PCB Footprint

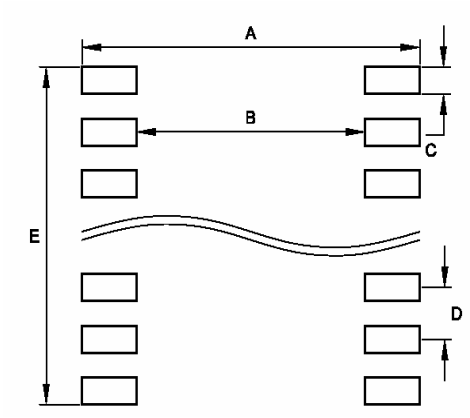

Recommended Footprint Data	
Symbol	**mm**
A	9.02
B	6.16
C	0.46
D	0.65
E	5.01

Downloaded from Arrow.com.

Ordering & Contact Information

The devices are available as the standard products shown in Figure 42.

Figure 42:
Ordering Information

Ordering Code	Description	Package	Delivery Form	Delivery Quantity
AS5145**H**-HSST	12-Bit Programmable Magnetic Rotary Encoder	SSOP 16 (5.3mm x 6.2mm)	Tape & Reel	2000 pcs/reel
AS5145H-HSSM				500 pcs/reel
AS5145**A**-HSST	Pre-programmed 10-bit incremental		Tape & Reel	2000 pcs/reel
AS5145A-HSSM				500 pcs/reel
AS5145**B**-HSST	Pre-programmed 12-bit incremental		Tape & Reel	2000 pcs/reel
AS5145B-HSSM				500 pcs/reel

Buy our products or get free samples online at:
www.ams.com/Products

Technical Support is available at:
www.ams.com/Technical-Support

Provide feedback about this document at:
www.ams.com/Document-Feedback

For further information and requests, e-mail us at:
ams_sales@ams.com

For sales offices, distributors and representatives, please visit:
www.ams.com/Contact

Headquarters
ams AG
Tobelbaderstrasse 30
8141 Premstaetten
Austria, Europe

Tel: +43 (0) 3136 500 0

Website: www.ams.com

Downloaded from Arrow.com.

RoHS Compliant & ams Green Statement

RoHS: The term RoHS compliant means that ams AG products fully comply with current RoHS directives. Our semiconductor products do not contain any chemicals for all 6 substance categories plus additional 4 substance categories (per amendment EU 2015/863), including the requirement that lead not exceed 0.1% by weight in homogeneous materials. Where designed to be soldered at high temperatures, RoHS compliant products are suitable for use in specified lead-free processes.

ams Green (RoHS compliant and no Sb/Br/Cl): ams Green defines that in addition to RoHS compliance, our products are free of Bromine (Br) and Antimony (Sb) based flame retardants (Br or Sb do not exceed 0.1% by weight in homogeneous material) and do not contain Chlorine (Cl not exceed 0.1% by weight in homogeneous material).

Important Information: The information provided in this statement represents ams AG knowledge and belief as of the date that it is provided. ams AG bases its knowledge and belief on information provided by third parties, and makes no representation or warranty as to the accuracy of such information. Efforts are underway to better integrate information from third parties. ams AG has taken and continues to take reasonable steps to provide representative and accurate information but may not have conducted destructive testing or chemical analysis on incoming materials and chemicals. ams AG and ams AG suppliers consider certain information to be proprietary, and thus CAS numbers and other limited information may not be available for release.

Downloaded from Arrow.com.

Copyrights & Disclaimer

Copyright ams AG, Tobelbader Strasse 30, 8141 Premstaetten, Austria-Europe. Trademarks Registered. All rights reserved. The material herein may not be reproduced, adapted, merged, translated, stored, or used without the prior written consent of the copyright owner.

Devices sold by ams AG are covered by the warranty and patent indemnification provisions appearing in its General Terms of Trade. ams AG makes no warranty, express, statutory, implied, or by description regarding the information set forth herein. ams AG reserves the right to change specifications and prices at any time and without notice. Therefore, prior to designing this product into a system, it is necessary to check with ams AG for current information. This product is intended for use in commercial applications. Applications requiring extended temperature range, unusual environmental requirements, or high reliability applications, such as military, medical life-support or life-sustaining equipment are specifically not recommended without additional processing by ams AG for each application. This product is provided by ams AG "AS IS" and any express or implied warranties, including, but not limited to the implied warranties of merchantability and fitness for a particular purpose are disclaimed.

ams AG shall not be liable to recipient or any third party for any damages, including but not limited to personal injury, property damage, loss of profits, loss of use, interruption of business or indirect, special, incidental or consequential damages, of any kind, in connection with or arising out of the furnishing, performance or use of the technical data herein. No obligation or liability to recipient or any third party shall arise or flow out of ams AG rendering of technical or other services.

Downloaded from Arrow.com.

Document Status

Document Status	Product Status	Definition
Product Preview	Pre-Development	Information in this datasheet is based on product ideas in the planning phase of development. All specifications are design goals without any warranty and are subject to change without notice
Preliminary Datasheet	Pre-Production	Information in this datasheet is based on products in the design, validation or qualification phase of development. The performance and parameters shown in this document are preliminary without any warranty and are subject to change without notice
Datasheet	Production	Information in this datasheet is based on products in ramp-up to full production or full production which conform to specifications in accordance with the terms of ams AG standard warranty as given in the General Terms of Trade
Datasheet (discontinued)	Discontinued	Information in this datasheet is based on products which conform to specifications in accordance with the terms of ams AG standard warranty as given in the General Terms of Trade, but these products have been superseded and should not be used for new designs

Downloaded from Arrow.com.

Revision Information

Changes from 2-00 (2016-Feb-05) to current revision 2-02 (2020-Nov-25)	Page
2-00 (2016-Feb-05) to 2-01 (2020-Sep-15)	
Updated text under “Incremental Output Hysteresis”	20
2-01 (2020-Sep-15) to 2-02 (2020-Nov-25)	
Updated Figure 5	6

Note(s):

1. Page and figure numbers for the previous version may differ from page and figure numbers in the current revision.
2. Correction of typographical errors is not explicitly mentioned.

Downloaded from Arrow.com.

Content Guide

1 General Description
1 Key Benefits & Features
2 Applications
2 Block Diagram

3 Pin Assignment
3 Pin Description

6 Absolute Maximum Ratings

7 Electrical Characteristics
10 Magnetic Input Specification
11 System Specifications

13 Timing Characteristics
14 Detailed Description
15 Mode_Index Pin
16 Synchronous Serial Interface (SSI)
18 Incremental Mode
21 Sync Mode
21 Sine/Cosine Mode
22 Daisy Chain Mode
23 Pulse Width Modulation (PWM) Output
24 Changing the PWM Frequency
25 Analog Output

26 Application Information
26 Programming the AS5145
27 Zero Position Programming
28 OTP Memory Assignment
29 User Selectable Settings
29 OTP Default Setting
30 Redundancy
31 Redundant Programming Option
31 OTP Register Entry and Exit Condition
32 Alignment Mode
34 3.3V / 5V Operation
35 Selecting Proper Magnet
36 Physical Placement of the Magnet
36 Magnet Placement
37 Failure Diagnostics
37 Magnetic Field Strength Diagnosis
37 Power Supply Failure Detection
38 Angular Output Tolerances
38 Accuracy
39 Transition Noise
40 High Speed Operation
41 Propagation Delays
41 Internal Timing Tolerance
42 Temperature
42 Accuracy Over Temperature
43 Differences Between AS5145H, AS5145A and AS5145B

Downloaded from Arrow.com.

44 Package Drawings & Markings
46 Recommended PCB Footprint

47 Ordering & Contact Information
48 RoHS Compliant & ams Green Statement
49 Copyrights & Disclaimer
50 Document Status
51 Revision Information

Downloaded from Arrow.com.