Glenair®

MIL-DTL-5015 TYPE REVERSE BAYONET CONNECTORS

SERIES ITS™

OVER 200 POWER AND SIGNAL INSERT ARRANGEMENTS
PLUS: CONNECTOR ACCESSORIES AND ASSEMBLY TOOLS

United States ▪ United Kingdom ▪ Germany ▪ France ▪ Nordic ▪ Italy ▪ Spain ▪ Japan

Downloaded from Arrow.com.

Glenair Series ITS and Series ITS-RG
MIL-DTL-5015 Type Reverse Bayonet Connectors
Product Selection Guide

Glenair®

Introduction
Your Guide to MIL-DTL-5015 Type Power Products

intro

Technical Reference
Insert Arrangements: A-6
Alternate Key Positions: A-30

A

Series ITS
Reverse Bayonet Connector Assemblies

B

Series ITS-RG
Rubber Coated Reverse Bayonet Connector Assemblies

C

Backshells and Accessories
For Series ITS and ITS-RG Reverse Bayonet Connectors

D

Contacts and Assembly Tools
For Series ITS and ITS-RG Reverse Bayonet Connectors

E

Index
Complete Listing of Catalog Pages

index

Downloaded from Arrow.com.

Connectors, Cables and World-Class Interconnect Expertise Arriving Now on Track 5015!

At their most basic level, rail system interconnect design challenges are similar to other transport modes. Reducing weight is a critical issue, especially for high-speed and Maglev rail systems. Shielding electromagnetic interference is important, especially in sensitive electronic systems such as engine monitoring and diagnostic sensors. Basic mechanical protection of cables, conductors and contacts is a standard requirement especially when frequent mating and unmating is required, or when cables are routed through exposed intercar or undercar locations. To ensure rapid and accurate car linking and cabin reconfigurations, interconnects must be easy to couple and keyed to avoid mis-mating. Vibration, shock and connector decoupling problems are also common in rail applications, and require focused attention when selecting shell materials and mating technologies. As passenger and crew safety is paramount—interconnection systems must not compound flammability, smoke or toxicity risks.

But make no mistake: the overriding challenge is environmental. Rail and transportation systems represent one of the most challenging environments for the long-term survivability and reliability of interconnect cables and assemblies. From high-speed rail transportation systems to heavy railway freight lines, the standard daily fare of the rail industry is one harsh environmental challenge after another.

Electrical and signal interconnections in rail car linkages, for example, are subject to significant environmental abuse. Undercar cables, exposed to splashing, mud, diesel exhaust and high heat, require extremely robust environmental protection. Locomotives are brutal testing grounds for cable systems which are subjected to hot oils, solvents, and fuel spills, not to mention high heat and other environmental stress factors. In fact, it's fair to say that the harsh environment of a locomotive engine compartment is where poorly designed or minimally protected interconnect cables go to die.

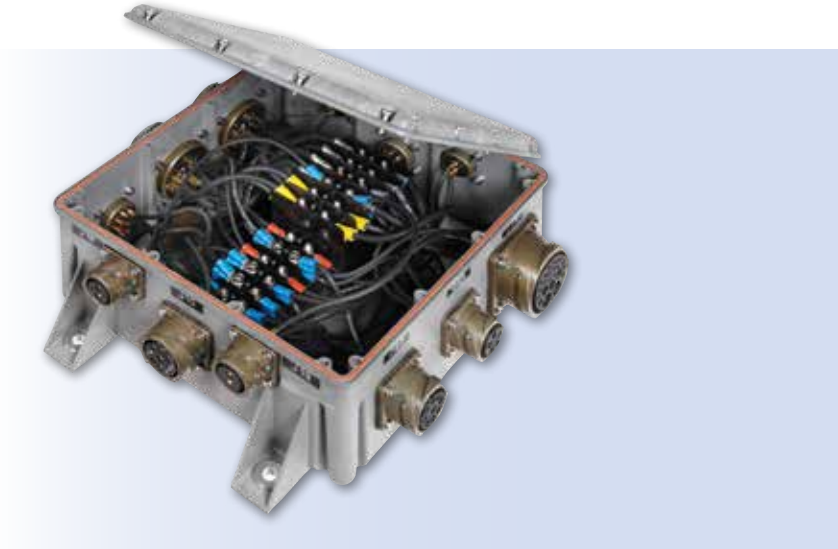

For this reason, the art of designing rail industry interconnect cables that provide long-life and value depends on a comprehensive understanding of the environmental stress factors that can, at a minimum, diminish performance, and at their worst lead to complete system failure. Glenair is an expert in the design of cable, box and conduit wire protection systems that prevent environmental damage and ensure longevity of service. The design and manufacture of environmentally sealed connectors, backshells and other components that keep interconnect systems free of corrosion has been our bread-and-butter business for over 50 years.

This catalog presents one of the core Glenair interconnect technologies that is specifically geared for use in rail systems, agricultural equipment, military vehicles and other harsh, environmental applications. Glenair Series ITS and ITS-RG connectors are perfectly suited to address every rail industry interconnect challenge. These ruggedized, MIL-DTL-5015 Type reverse bayonet connectors are deployed in virtually every rail industry sub-system including:

© 2017 Glenair, Inc.

GLENAIR, INC. • 1211 AIR WAY • GLENDALE, CA 91201-2497 • 818-247-6000 • FAX 818-500-9912
www.glenair.com E-Mail: sales@glenair.com

Downloaded from Arrow.com.

- Automatic Train Control (ATC) Systems
- High Temperature Engine Controls and Sensors
- Speed Sensors
- Diagnostics
- Braking Systems
- Anti-skid Systems
- Traction Motors
- Converters
- Couplers
- Pantographs
- Electronic Monitoring and
- Diagnostic Systems
- Intracar/Intercar/Undercar Cabling Systems
- Radar and Rail Navigation Systems
- Radio Communications Systems
- Data Systems
- Rail Car Lighting and Security Systems
- Climate Control for Passengers and Freight
- Battery Chargers
- Door Control Systems
- Equipment and System Bonding Systems
- Cabin Video, Phone, and Internet Systems
- Way-Side Signaling
- Track Controls
- Trackside Safety System

Urban and inter-urban rail systems are ideally suited for ruggedized 5015 type connectors.

Connectors and cables see tough, environmental duty in rail applications. Poorly sealed products, or those made from inappropriate materials, can lead directly to system failures. Glenair Series ITS and ITS-RG are designed for the most severe environmental applications—from rail cars to military vehicles.

© 2017 Glenair, Inc.
U.S. CAGE Code 06324
Printed in Italy

GLENAIR, INC. • 1211 AIR WAY • GLENDALE, CA 91201-2497 • 818-247-6000 • FAX 818-500-9912
www.glenair.com
E-Mail: sales@glenair.com

Downloaded from Arrow.com.

Turnkey Series ITS and ITS-RG Wired Cable and Conduit Interconnect Assemblies

The Glenair ITS connector series features over 200 power and signal insert arrangements. Based on the MIL-DTL-5015 standard, ITS features an improved reverse bayonet coupling technology in place of the standard threads used in MIL-DTL-5015. The 3-point bayonet mechanism reduces coupling time and provides easier mating, especially when the connector is in an awkward position. Positive locking of the three stainless steel pins provides reliable resistance to vibration and shock, and prevents connector de-coupling in even the most rugged applications such as locomotives, mass transit cars and military vehicles. Bayonet pins are protected from damage by their placement inside the plug coupling nut, and the receptacle's exposed ramps are easy to clean in harsh environments. Extremely durable, the reverse bayonet coupling is rated up to 2,000 matings.

On new applications, as well as retrofits of existing systems, manufacturers face contractual penalties for system "down-time", or late deliveries. Cost-conscious designers are therefore motivated to choose interconnects and interconnect cabling that deliver reliable turnkey performance. For this reason, high-reliability suppliers like Glenair—whose products take into account the total cost-of-ownership over the full life of the system—are increasingly sought out for turnkey cable design and fabrication.

In addition to our work designing interconnect products for new rail applications, Glenair has a long track-record of solving problems in existing systems undergoing periodic mid-life overhauls. During the overhaul process designers sometimes take the opportunity to enhance functionality and improve performance in interconnect cabling. Often these design improvements require changes in connector hardware, as well as the wire protection media. When retrofitting existing locomotives or military vehicles, switches, gages, indicators and sensors must fit into existing control panel real estate. Consequently, overhaul designers sometimes require reduced interconnect package size or better solutions for the routing and attachment of cable harnesses. Glenair is well positioned to assist in this work as we are the only manufacturer in the business that both produces the individual interconnect components, as well as complete wiring and cabling services.

© 2017 Glenair, Inc.

Downloaded from Arrow.com.

Military Vehicle Applications

Standard ITS inserts are made from neoprene, but high temperature silicon or solvent-resistant elastomer inserts can be specified. Series ITS connectors can be ordered with a flame retardant compound that significantly reduces fire hazards, and meets smoke density and toxicity standards.

Glenair ITS-RG Connectors are designed for easy handling in harsh military applications.

The Glenair Series ITS-RG Connector is a unique, rugge-dized rubber-coated version of the Series ITS designed for use in harsh environmental applications. Offering the same electrical performance as the standard ITS, the ITS-RG has better insulation from high current and voltage. The rubber covering also allows for easier grip-ping and handling, prevents shell damage, eliminates fluid infiltrations and guarantees a Protection Index up to IP67. The rubber coating conforms to the strictest safety norms regarding fire resistance, toxicity and smoke including ASTM E162, ASTM e662, NFPA 130 and EN 45545.

Extremely versatile, Glenair's Series ITS connector has been specified in a wide range of rail and military vehicle applications including command and control systems, brakes, converters, door-opening systems, pantographs, data and communication systems, cou-plers, speed sensors, diagnostics, anti-skid devices, lighting, and intervehicle coupling connections.

Next Generation Military Vehicles

The latest generation of military vehicles are as sophisticated as commercial jets. New command and control panels are as jam-packed with systems controllers, sensors, gauges, and equipment as any modern airplane cockpit. The power and signal linkages within and between the electronic systems in a modern military vehicle constitute one of the more complex interconnect cabling systems in existence. The interconnect cables used to service weapons systems, targeting, radio communications, and soldier recharging services, phone and Internet, rival in complexity those found in the most sophisticated fighter jet.

Glenair Series ITS and ITS-RG connectors and cables are designed for use in the most demanding power and signal interconnect applications, and have been selected for use in countless military vehicles, shelters and other tactical applications.

© 2017 Glenair, Inc.

Downloaded from Arrow.com.

Reverse Bayonet Rail Application Guide

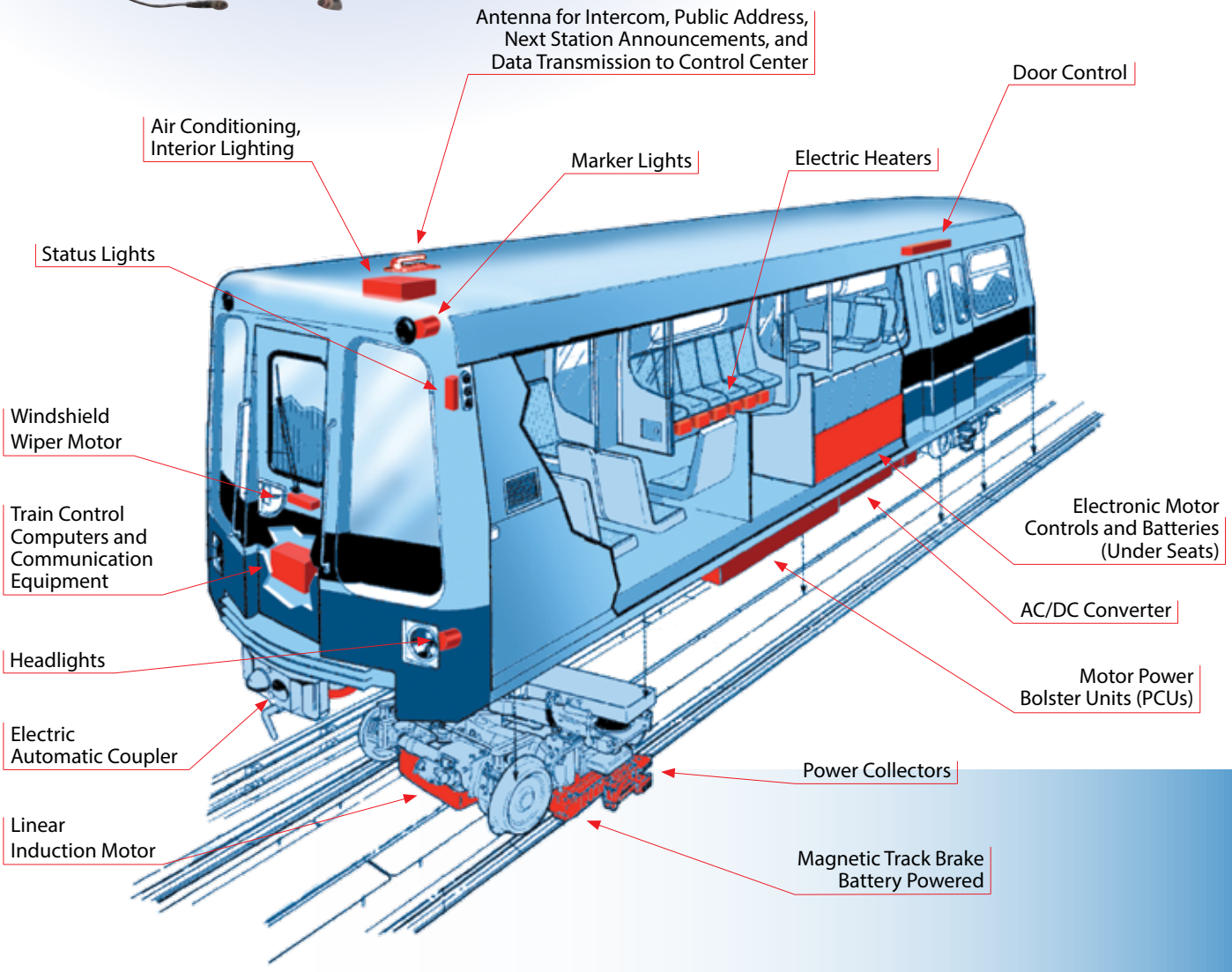

© 2017 Glenair, Inc. U.S. CAGE Code 06324 Printed in Italy

GLENAIR, INC. • 1211 AIR WAY • GLENDALE, CA 91201-2497 • 818-247-6000 • FAX 818-500-9912
www.glenair.com E-Mail: sales@glenair.com

Downloaded from Arrow.com.

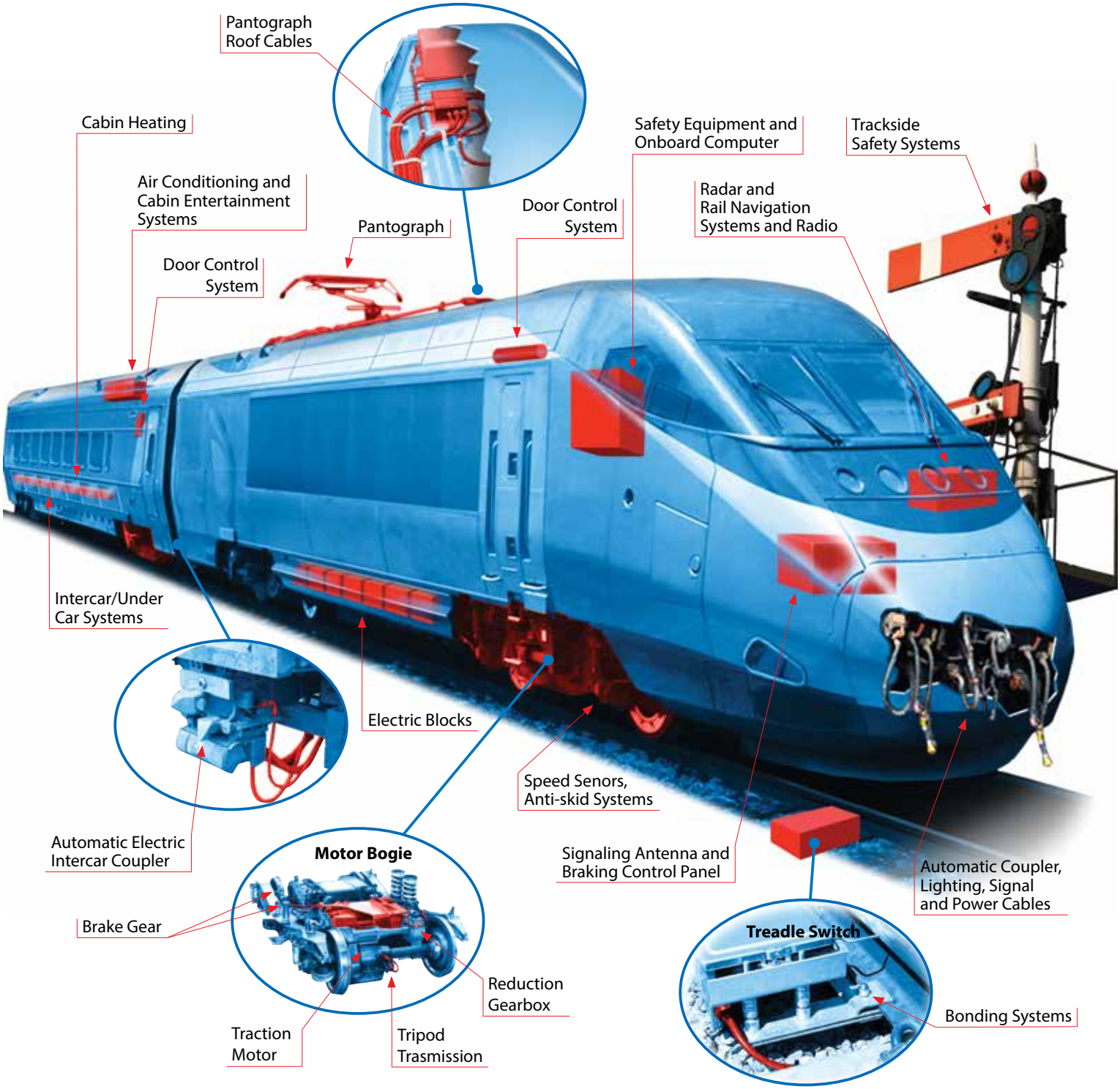

A World of Rail Industry Interconnect Solutions

Glenair supplies a comprehensive line of high-reliability interconnect solutions for twe rail industry: from MIL-DTL-5015 type reverse bayonet power and signal connectors, to corrosion-proof junction boxes, overmolded cable assemblies, conduit wire protection products and more. We are the go-to manufacturer of purpose designed interconnect cabling for the most challenging rail interconnect applications.

© 2017 Glenair, Inc. U.S. CAGE Code 06324 Printed in Italy

GLENAIR, INC. • 1211 AIR WAY • GLENDALE, CA 91201-2497 • 818-247-6000 • FAX 818-500-9912
www.glenair.com **E-Mail: sales@glenair.com**

Downloaded from Arrow.com.

Pendolino: A New Angle on Rail Transport

First developed and manufactured by Fiat, but taken over by Alstom in 2002, Pendolino is an Italian tilting train system used throughout Europe and in China. The tilt technology is contained in the bogie (swivel truck). When going into curves, sensors on the leading car determine the carriage box tilt (up to 8˚) needed to compensate for the lateral acceleration. This information is passed along to navigational devices in the following railway cars, which then use hydraulic cylinders to tilt the carriage box accordingly. In an S-curve, this sensitive system even allows the front of the train to tilt to one side, while the rear cars are still swerving to the other.

Pendolino (from the Italian Pendolo) is an Italian family of tilting trains manufactured by Fiat Ferroviaria

Tilting a massive train at high speed causes significant centrifugal and centripetal forces under the cars. Traditional interconnects failed under the stress. Glenair was brought in to develop flexible, durable, high-reliability cabling and interconnects that would stand up to the stresses, heat, and other harsh conditions found on Pendolino train systems.

Like Hercule Poirot, Glenair Solves Another One on the Orient Express

Glenair application engineers, every bit the intellectual match for retired Belgian detective Hercule Poirot, were asked to solve not a crime, but a serious problem involving an emergency braking system upgrade on the Orient Express. A complicated interplay of hydraulics, pneumatics and mechanics, the braking system solution had to fit within very limited space, and the train is, of course, a much-revered and valuable historical artifact.

The case was solved with Glenair ITS reverse bayonet connector cables and flange mount receptacles. Plugs with cable clamp backshells mated to receptacles mounted on existing metal junction boxes along with a specially-designed, corrosion-free and EMI/RFI-protected Glenair Composite Junction Box, factory wired to an internal termination block.

Riding the Rails: Glenair Tackles Trackside Interconnect Problems

Not only are Glenair Series ITS and ITS-RG connectors great for undercar applications where up-splash and rail bed debris subject interconnect systems to significant hazards, they're also terrific for trackside applications. The Milan Metro required interconnect systems that would protect wire media from weather and sun exposure. Signaling boxes, like most trackside applications, are critical to railway safety. They call for no fail solutions with maximum durability. Glenair delivered a turnkey solution.

© 2017 Glenair, Inc.

Downloaded from Arrow.com.

Glenair is Moving Out with A Broad Range of EMI and Environmental Interconnect Solutions

Glenair Series ITS MIL-DTL-5015 type (VG95234 Qualified) connectors can be ordered with a wide variety of standard backshell styles for strain-relief, environmental protection and EMI reduction in multiple angles and profiles. In addition, Glenair is producing new "best-of-breed" backshell and accessory products for these Glenair MIL-DTL-5015 type reverse bayonet connectors that take full advantage of our innovative design, shielding and termination technologies, including BAND-IT® banding solutions.

Count on Glenair to develop labor-saving backshell solutions that address weight reduction needs, environmental requirements and overall package size. For example, we have developed the industry's simplest shield termination systems, using conical, crimp, lockring and lampbase thread ring technology combined with self-locking rotatable couplings and integrated shield socks in standard to ultra low profiles, Glenair has a solution for every interconnect challenge.

Glenair application engineers also designed a ruggedized interconnect cable solution for Milan Metro incorporating a high-performance electrical harness using a low fire hazard neoprene cable jacket and a flame retardant polyurethane material overmolded and sealed at all transition points—from Glenair feedthroughs to Glenair Series ITS connectors.

In a related application, Glenair designed a customized LED technology lighting system to simulate exactly the electrical performance of standard light bulbs. This development allowed use of signaling equipment already installed on site with the upgraded reliability and low power-usage of LED's. The technology was packaged in IP67-rated waterproof Composite Junction Boxes that meet MIL-S-901D and MIL-STD-167 standards for shock and vibration, along with EMI/RFI/HIRF and lightning strike performance specifications.

Military vehicles are perfectly suited for ruggedized power and signal interconnections using Glenair Series ITS and ITS-RG reverse bayonet connectors.

© 2017 Glenair, Inc.

Downloaded from Arrow.com.

Glenair Italia: State-of-the-Art Connector Manufacturing

Before joining the Glenair family, our Power Product Group had a thirty-year history as one of the top providers of ruggedized power and signal connectors for military, industrial, telecom and rail applications. Headquartered in Bologna, Italy, our Power Product group is certified to UNI EN ISO 9001, IRIS, and various VG product qualifications.

In over 60,000 square feet of production space, a highly skilled and educated workforce runs a modern robotic factory with automated parts picking and assembly.

Glenair conducts its own qualification testing including salt spray, humidity cycling, vibration and shock, thermal shock, dielectric values, insulation resistance, and current ratings. "Green" plating facilities employing environmentally sensitive processes round out the manufacturing operation.

The main product line manufactured and assembled in our Bologna facility is power and signal connectors qualified to the VG 95234 specification. These MIL-DTL-5015 type connectors are designed with reverse bayonet couplings and are intended for use in rail, transportation and military vehicle applications.

North American Assembly

Glenair's volume production capabilities allow us to perform final assembly operations both in Bologna and in North America. Final assembly of Series ITS and other connector families in North America are completed in Glenair's main factory in Glendale and placed in stock for immediate same-day shipment.

© 2017 Glenair, Inc. U.S. CAGE Code 06324 Printed in Italy

Downloaded from Arrow.com.

VG 95234 Qualified Power and Signal Connectors for Rugged Application Environments—From Military Vehicles to Rail, Mass Transit and Industrial Equipment

The Glenair Series ITS and ITS-RG connector series are based on the MIL-DTL-5015 standard, but feature an improved reverse bayonet coupling technology in place of the threaded coupling used in MIL-DTL-5015. The 3-point bayonet coupling mechanism reduces coupling time and provides easier mating when the connector is in an awkward position. Positive locking of the three stainless steel pins provides reliable resistance to vibration and shock, and prevents connector de-coupling in even the most rugged applications such as locomotives, mass-transit cars and military vehicles. The products are qualified to the VG 95234 standard and are currently used throughout Europe, North America and Asia on thousands of ruggedized applications.

All connector styles are available with wire sealing grommets and dynamic interfacial seals for environmental protection. Equipped with the appropriate backshells and accessories, the connectors are submersible for 12 hours up to a depth of ten meters. The ITS-RG Series incorporates a ruggedized outer coating of rubber for additional mechanical strength and to prevent shell damage due to rough handling.

The Glenair Series ITS and ITS-RG share the same insert arrangements, shell dimensions, supported contacts and electrical performance ratings as the MIL-DTL-5015 and the VG 95234 and are fully interchangeable with VG standard connectors. Supported contact types include solder, crimp, and PCB type in both gold or silver surface platings. Thermocouple contacts are also available.

Depending on the application requirements the following options may be supplied:

- Connectors and accessories in either stainless steel or marine bronze
- Flame resistant, halogen-free rubber inserts
- Cadmium-free surface treatments
- Special contacts

The ITS and ITS-RG connector series are perfectly suited for use in rugged applications where EEC compliance directives for electromagnetical compatibility is required. A complete range of EMI shield termination accessories is available for both overall as well as individual wire shields.

Please contact the factory for additional information or any of our worldwide sales and engineering facilities. Glenair's website, www.glenair.com, also has complete information on these products, including inventory listings.

© 2015 Glenair, Inc.

Downloaded from Arrow.com.

Glenair Series ITS
MIL-DTL-5015 Type Reverse Bayonet Connectors
Summary of Connector Styles and Backshells

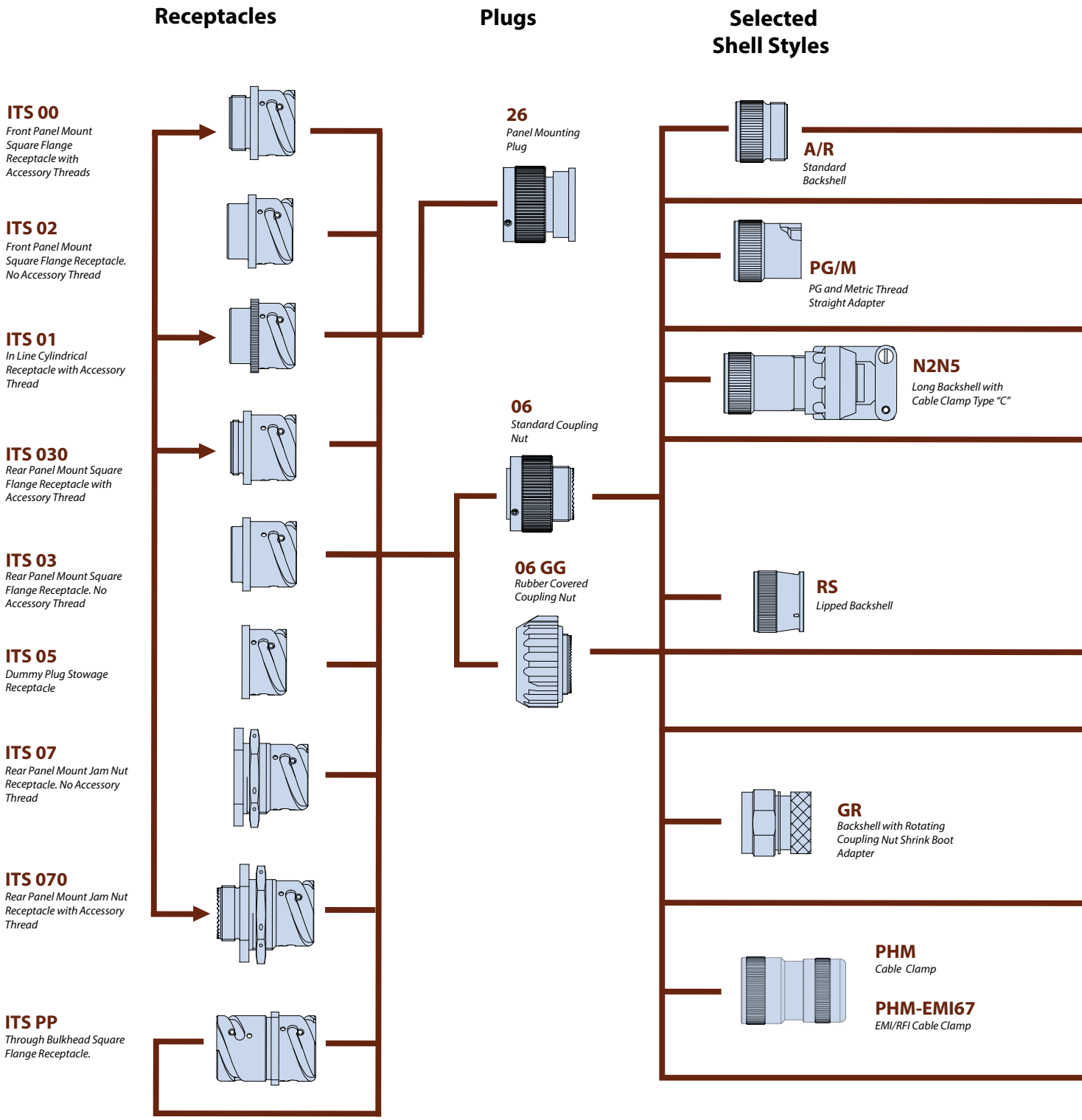

© 2015 Glenair, Inc. U.S. CAGE Code 06324 Printed in Italy

GLENAIR, INC. • 1211 AIR WAY • GLENDALE, CA 91201-2497 • 818-247-6000 • FAX 818-500-9912
www.glenair.com E-Mail: sales@glenair.com

Downloaded from Arrow.com.

Glenair Series ITS
MIL-DTL-5015 Type Reverse Bayonet Connectors
Summary of Connector Styles and Backshells

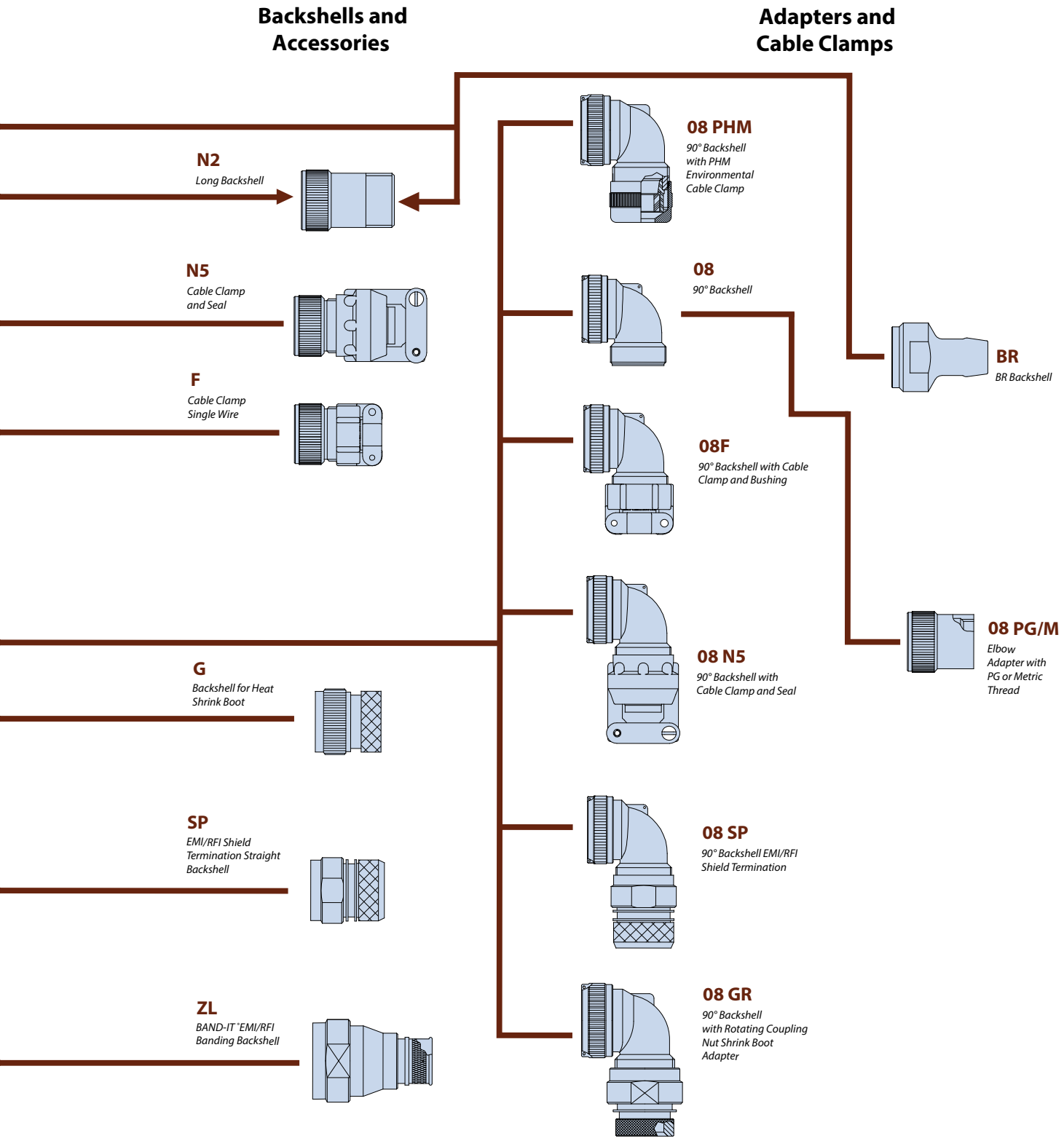

© 2015 Glenair, Inc. U.S. CAGE Code 06324 Printed in Italy

Downloaded from Arrow.com.

Glenair Series ITS
MIL-DTL-5015 Type Reverse Bayonet Connectors
Cross Section

- 00
Wall Mount Receptacle

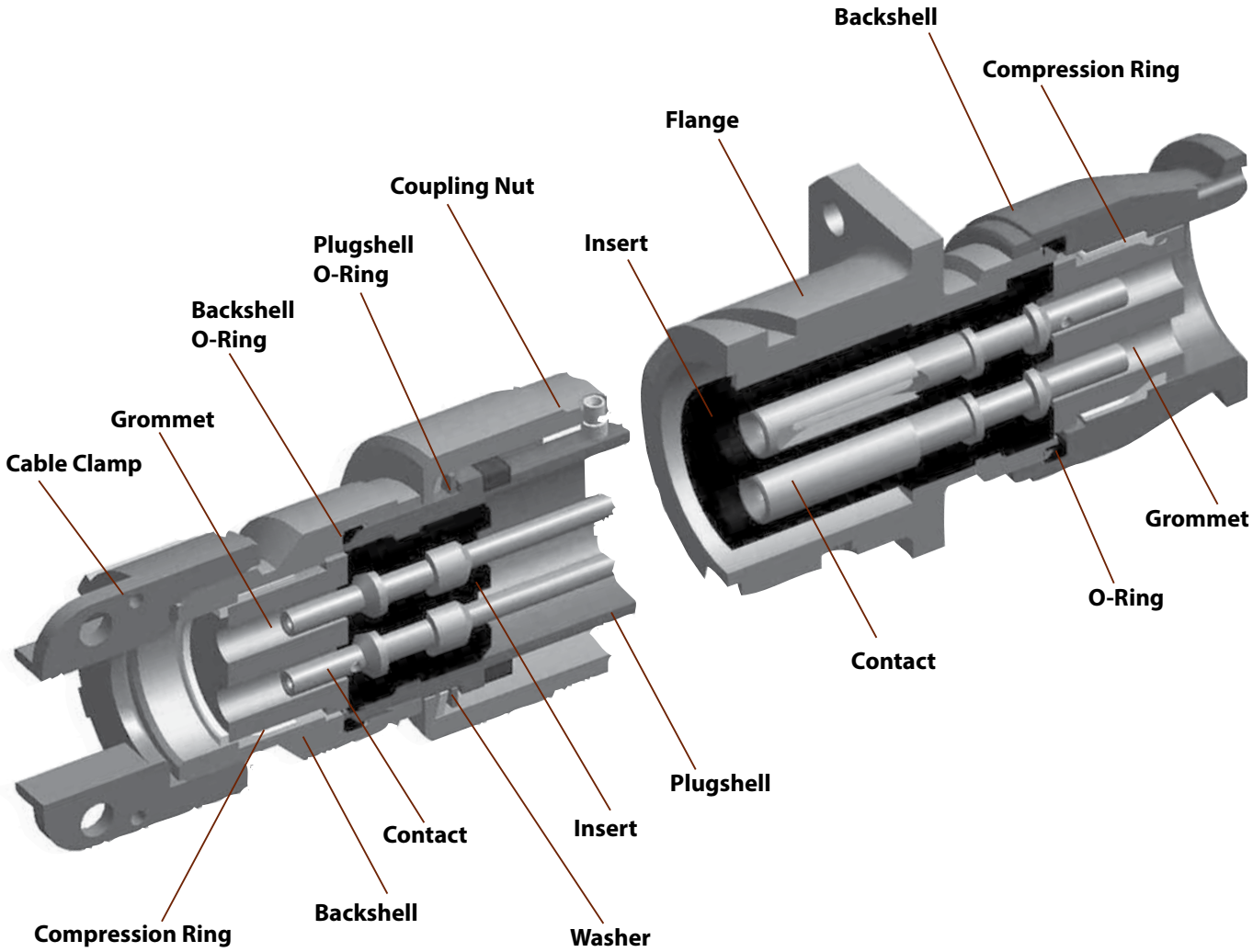

-06
Straight Plug

© 2015 Glenair, Inc. U.S. CAGE Code 06324 Printed in Italy

GLENAIR, INC. • 1211 AIR WAY • GLENDALE, CA 91201-2497 • 818-247-6000 • FAX 818-500-9912
www.glenair.com E-Mail: sales@glenair.com

Downloaded from Arrow.com.

Glenair Series ITS and ITS-RG
MIL-DTL-5015 Type Reverse Bayonet Connectors
Materials Overview

Contact Specifications Copper alloy with silver plating (standard) or gold plating (available on request)

Contact Size	Rated Current at 20 C	Rated Current at 80 C	Max. Contact resist.	Wire size
20	7.5 A	7.5 A	12.0 mΩ	20-26 AWG
18	10A	7.5 A	12.0 mΩ	18-26 AWG
16	22 A	13 A	6.0 mΩ	16-22 AWG
12	41 A	23 A	3.0 mΩ	12-14 AWG
8	73 A	46 A	1.0 mΩ	8-10 AWG
4	135 A	80 A	0.5 mΩ	4-6 AWG
0	245 A	150 A	0.3 mΩ	0-2 AWG
4/0	350 A	225 A	0.2 mΩ	4/0 AWG

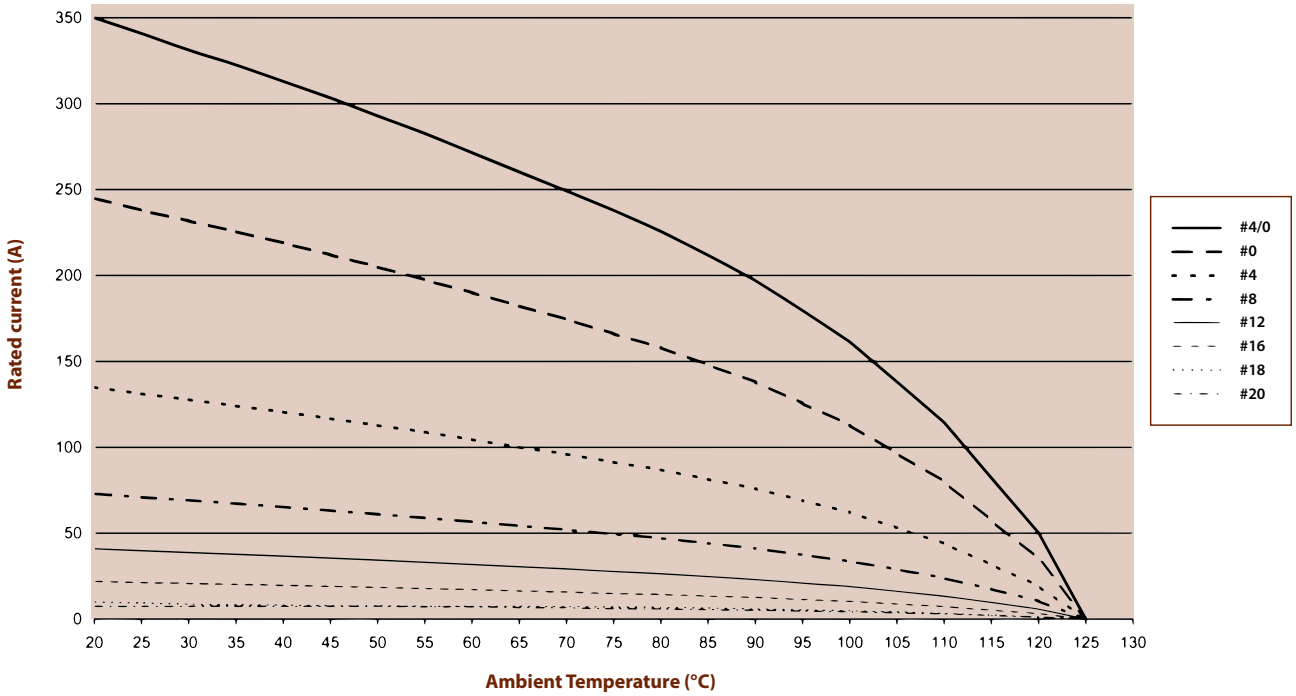

Service Rating (Minimum Insulating resistance: ≥ **5 x 10³ MΩ**)

Class	Operating voltage Vdc	Operating voltage Vac RMS	Test voltage Vac RMS
INST.	250 V	200 V	1000 V
A	700 V	500 V	2000 V
D	1250 V	900 V	2800 V
E	1750 V	1250 V	3500 V
B	2450 V	1750 V	4500 V
C	4200 V	3000 V	7000 V

Materials: **Metal parts**: Aluminium alloy standard. Sainless steel and marine bronze also available.
Insulating parts: High insulation synthetic rubber resistant to oils and high temperatures (-55°C to +125°C) in accordance with MIL-R-3065. All connectors are also available in fire resistant and halogen free materials.

© 2015 Glenair, Inc. U.S. CAGE Code 06324 Printed in Italy

Downloaded from Arrow.com.

Glenair Series ITS and ITS-RG
MIL-DTL-5015 Type Reverse Bayonet Connectors
Contact Arrangements Front View of Pin Insert

1 CONTACT

Arrangement	16-2	16-12
Contact Size	12	4
Service Rating	E	A

1 CONTACT

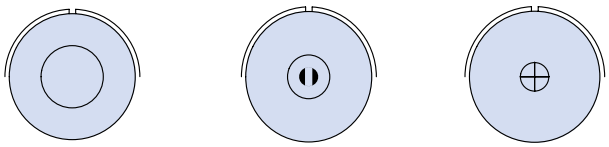

Arrangement	18-6	18-7	18-16
Contact Size	4	8	12
Service Rating	D	B	C

1 CONTACT

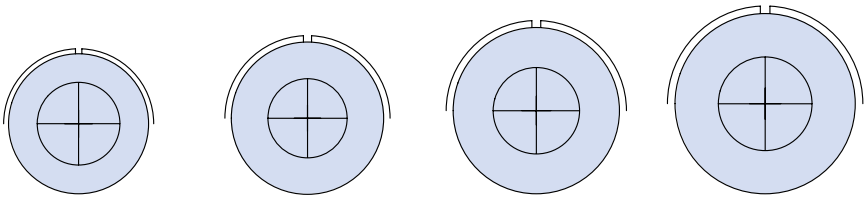

Arrangement	20-2	22-7	24-A1	28-B1
Contact Size	0	0	0	0
Service Rating	D	E	B	B

1 CONTACT

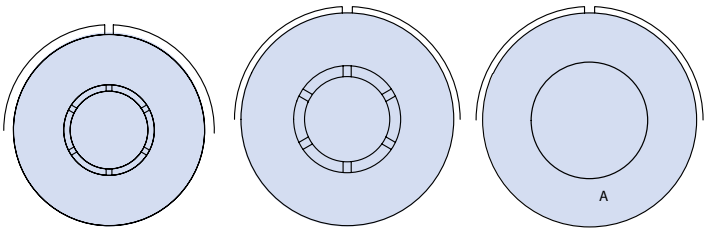

Arrangement	32-A1	36-01	36-B90
Contact Size	AWG 4/0	AWG 4/0	Special
Service Rating	A	C	D

2 CONTACTS

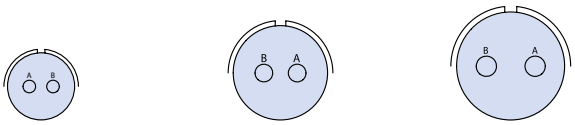

Arrangement	10SL-4	14S-9	16S-4
Contact Size	16S	16S	16S
Service Rating	A	A	D

CONTACT LEGEND

© 2015 Glenair, Inc. U.S. CAGE Code 06324 Printed in Italy

Downloaded from Arrow.com.

Glenair Series ITS and ITS-RG
MIL-DTL-5015 Type Reverse Bayonet Connectors
Contact Arrangements Front View of Pin Insert

2 CONTACTS

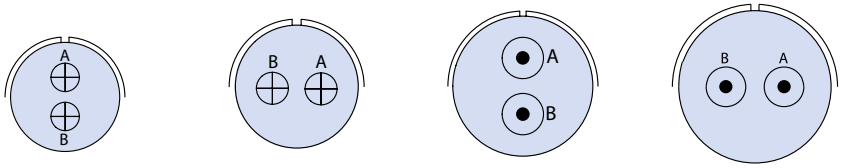

Arrangement	16-11	18-3	20-23	22-1
Contact Size	12	12	8	8
Service Rating	A	D	A	D

2 CONTACTS

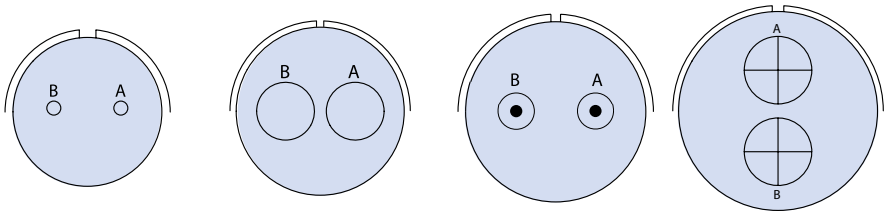

Arrangement	22-11	24-9	28-B2	32-5
Contact Size	16	4	8	0
Service Rating	B	A	E	D

3 CONTACTS

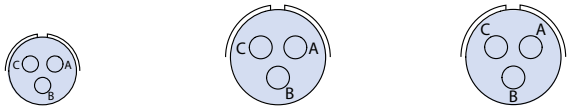

Arrangement	10SL-3	14S-1	14S-7
Contact Size	16S	16S	16S
Service Rating	A	A	A

3 CONTACTS

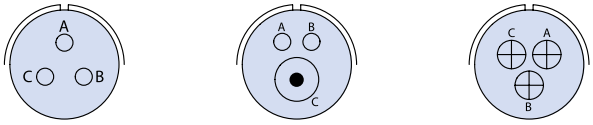

Arrangement	16S-5	16-7	16-10
Contact Size	16S	1/8, 2/16	12
Service Rating	A	A	A

3 CONTACTS

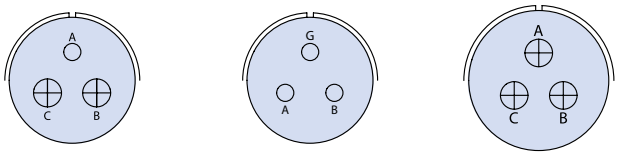

Arrangement	18-5	18-22	20-3
Contact Size	2/12, 1/16	16	12
Service Rating	D	D	D

CONTACT LEGEND

© 2015 Glenair, Inc. U.S. CAGE Code 06324 Printed in Italy

Downloaded from Arrow.com.

Glenair Series ITS and ITS-RG
MIL-DTL-5015 Type Reverse Bayonet Connectors
Contact Arrangements Front View of Pin Insert

3 CONTACTS

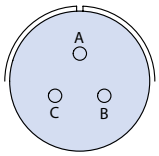

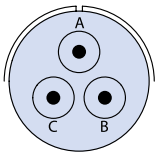

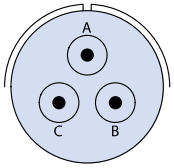

Arrangement	20-6	20-19	22-2
Contact Size	16	8	8
Service Rating	D	A	D

3 CONTACTS

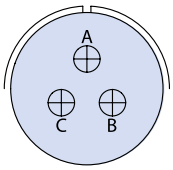

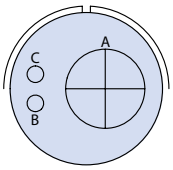

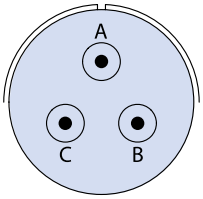

Arrangement	22-9	22-21	28-3
Contact Size	12	1/0, 2/16	8
Service Rating	E	A	E

3 CONTACTS

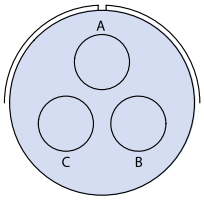

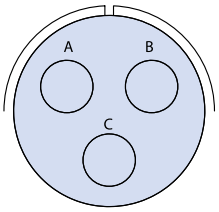

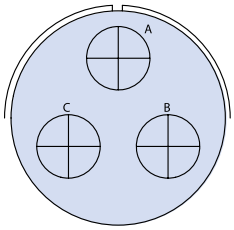

Arrangement	28-6	32-A3	36-4
Contact Size	4	4	0
Service Rating	D	E	A=D; B,C=A

4 CONTACTS

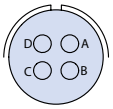

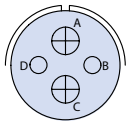

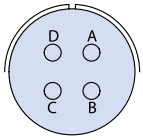

Arrangement	14S-2	16-9	18-4
Contact Size	16S	2/12, 2/16	16
Service Rating	I	A	D

4 CONTACTS

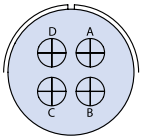

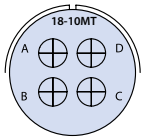

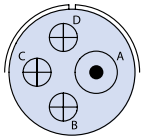

Arrangement	18-10	18-10S MT*	18-13
Contact Size	12	12	1/8, 3/12
Service Rating	A	A	A

* Contact "D": First - Mate - Last - Break Grounding Contact

CONTACT LEGEND

© 2015 Glenair, Inc. U.S. CAGE Code 06324 Printed in Italy

Downloaded from Arrow.com.

Glenair Series ITS and ITS-RG
MIL-DTL-5015 Type Reverse Bayonet Connectors
Contact Arrangements Front View of Pin Insert

4 CONTACTS

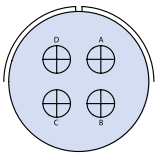

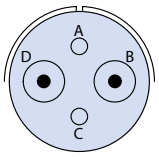

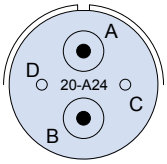

Arrangement	20-4	20-24	20-A24*
Contact Size	12	2/8, 2/16	2/8, 2/16
Service Rating	D	A	A

4 CONTACTS

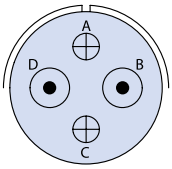

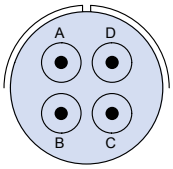

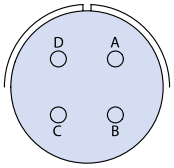

Arrangement	22-4	22-22S MT**	22-10
Contact Size	2/8, 2/12	8	16
Service Rating	A	A	E

4 CONTACTS

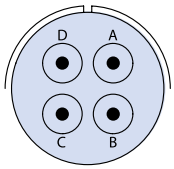

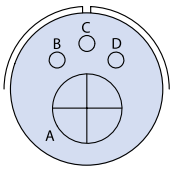

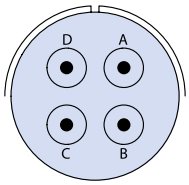

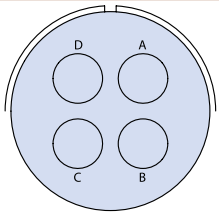

Arrangement	22-22	24-4	24-22	32-17
Contact Size	8	1/0, 3/16	8	4
Service Rating	A	D	D	D

4 CONTACTS

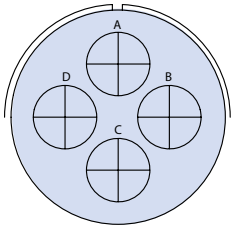

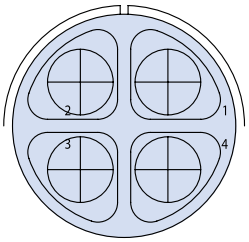

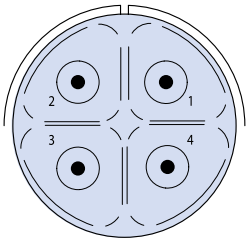

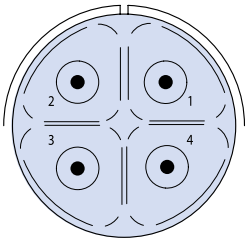

Arrangement	36-5	40-B4***	40-D4***	40-G4
Contact Size	0	0	8	8
Service Rating	A	E	C	E

5 CONTACTS

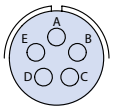

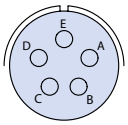

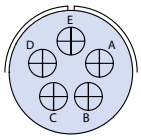

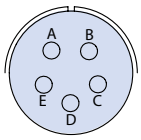

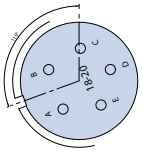

Arrangement	14S-5	16S-8	18-11	18-20	18-30 (18-20 x 110°)
Contact Size	16S	16S	12	16	16
Service Rating	I	A	A	A	A

* Consult Factory **Contact "D": First - Mate - Last - Break Grounding Contact *** For 90° Backshell consult factory

CONTACT LEGEND

© 2015 Glenair, Inc. U.S. CAGE Code 06324 Printed in Italy

Downloaded from Arrow.com.

Glenair Series ITS and ITS-RG
MIL-DTL-5015 Type Reverse Bayonet Connectors
Contact Arrangements Front View of Pin Insert

5 CONTACTS

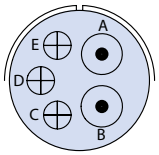

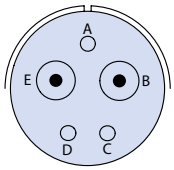

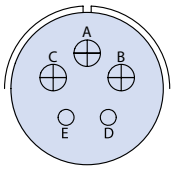

Arrangement	20-14	22-12	22-34
Contact Size	2/8, 3/12	2/8, 3/16	3/12, 2/16
Service Rating	A	D	D

5 CONTACTS

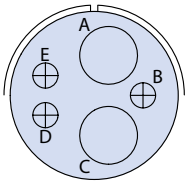

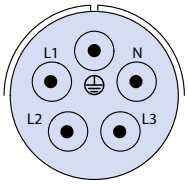

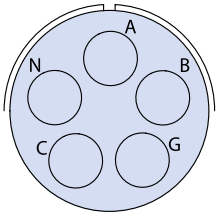

Arrangement	24-12	24-G5	32-A5GM
Contact Size	2/4, 3/12	8	4
Service Rating	A	A	A

5 CONTACTS

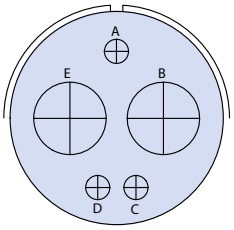

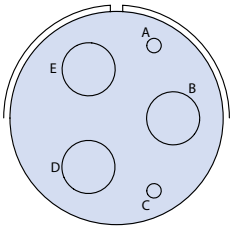

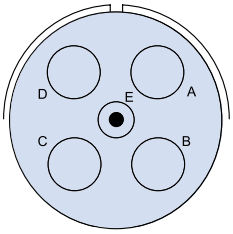

Arrangement 32-1	32-1	32-2	32-79
Contact Size	2/0, 3/12	3/4, 2/16	4/4, 1/8
Service Rating	A=E; B,C,D,E=D	E	D

5 CONTACTS

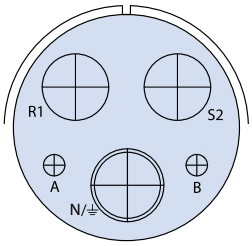

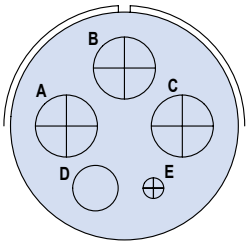

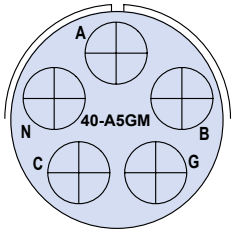

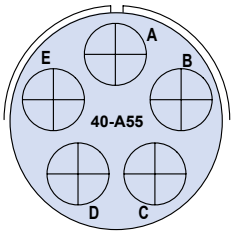

Arrangement	40-A3	40-A5	40-A5 GM	40-A55
Contact Size	1/0M, 2/0, 2/12	3/0, 1/4, 1/12	0	0
Service Rating	A	A	A	A

CONTACT LEGEND

© 2015 Glenair, Inc. U.S. CAGE Code 06324 Printed in Italy

Downloaded from Arrow.com.

Glenair Series ITS and ITS-RG
MIL-DTL-5015 Type Reverse Bayonet Connectors
Contact Arrangements Front View of Pin Insert

6 CONTACTS

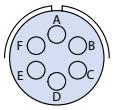

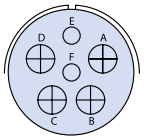

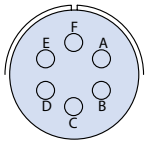

Arrangement	14S-6	18-06	18-12
Contact Size	16S	4/12, 2/16	16
Service Rating	I	A	A

6 CONTACTS

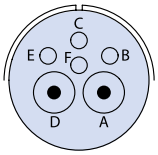

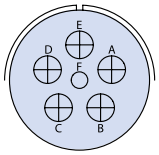

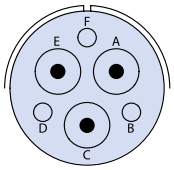

Arrangement	20-8	20-17	20-22
Contact Size	2/8, 4/16	5/12, 1/16	3/8, 3/16
Service Rating	I	A	A

6 CONTACTS

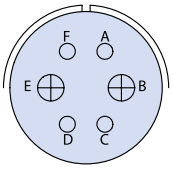

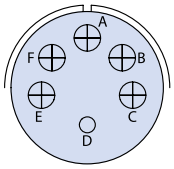

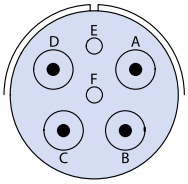

Arrangement	22-5	22-15	24-06
Contact Size	2/12, 4/16	5/12, 1/16	4/8, 2/16
Service Rating	D	D=E; A,B,C,E,F=A	D

6 CONTACTS

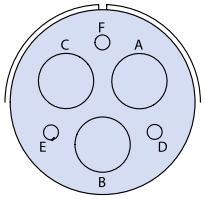

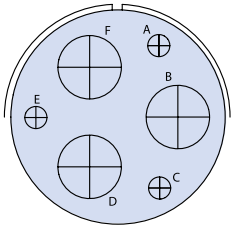

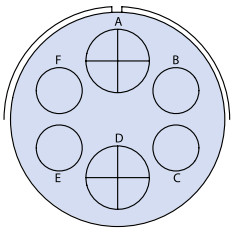

Arrangement	28-22	36-3	36-6
Contact Size	3/4, 3/16	3/0, 3/12	2/0, 4/4
Service Rating	D	D	A

CONTACT LEGEND

© 2015 Glenair, Inc. U.S. CAGE Code 06324 Printed in Italy

Downloaded from Arrow.com.

Glenair Series ITS and ITS-RG
MIL-DTL-5015 Type Reverse Bayonet Connectors
Contact Arrangements Front View of Pin Insert

6 CONTACTS

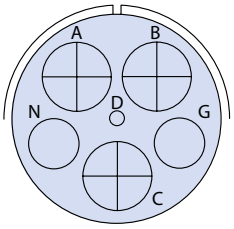

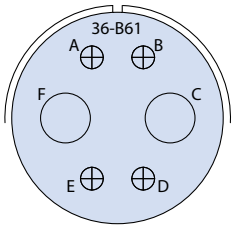

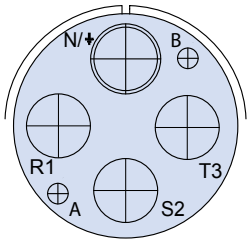

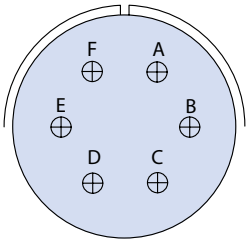

Arrangement	36-A51	36-B61	40-A4	40-A6
Contact Size	3/0, 2/4, 1/16	2/4, 4/12	1/0M, 3/0, 2/12	12
Service Rating	D	E	A	B

7 CONTACTS

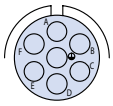

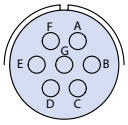

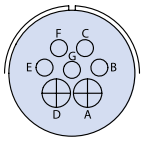

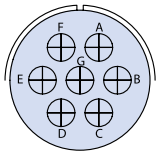

Arrangement	14S-07	16S-1	18-9	20-15
Contact Size	16S	16S	2/12, 5/16	12
Service Rating	I	A	I	A

7 CONTACTS

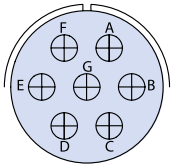

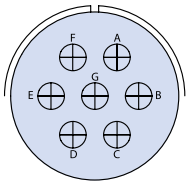

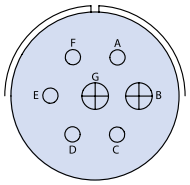

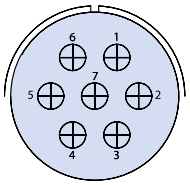

Arrangement	22-28	24-2	24-3	24-07
Contact Size	12	12	2/12, 5/16	12
Service Rating	A	D	A	D

7 CONTACTS

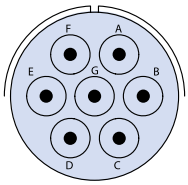

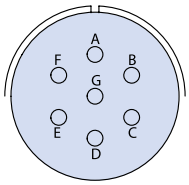

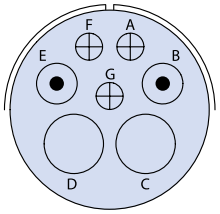

Arrangement	24-10	24-27	28-10
Contact Size	8	16	2/4, 2/8, 3/12
Service Rating	A	E	G=D; Bal=A

CONTACT LEGEND

© 2015 Glenair, Inc. U.S. CAGE Code 06324 Printed in Italy

Downloaded from Arrow.com.

Glenair Series ITS and ITS-RG
MIL-DTL-5015 Type Reverse Bayonet Connectors
Contact Arrangements Front View of Pin Insert

7 CONTACTS

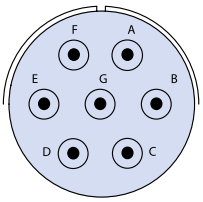

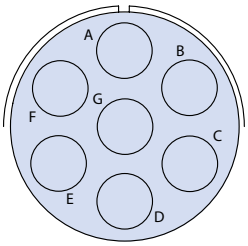

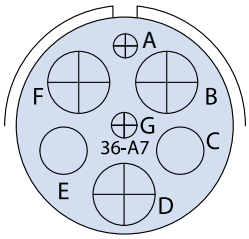

Arrangement	28-70	36-77	36-A7
Contact Size	8	4	3/0, 2/4, 2/12
Service Rating	A	D	A

8 CONTACTS

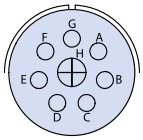

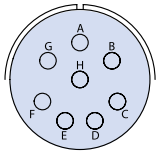

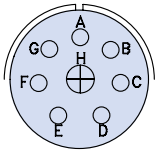

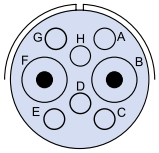

Arrangement	18-8	20-7	20-9	20-A8
Contact Size	1/12, 7/16	16	1/12, 7/16	2/8, 6/16
Service Rating	A	A,B,H, G = D; C,D,E,F=A	H=D; Bal=A	I

8 CONTACTS

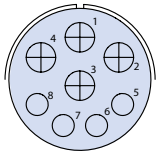

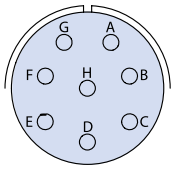

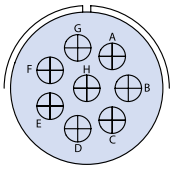

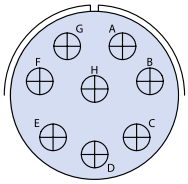

Arrangement	20-B8	22-18	22-23	24-6
Contact Size	4/12, 4/16	16	12	12
Service Rating	A	A,B,F,G, H = D; C,D, E=A	H=D; Bal=A	A,G,H=D; Bal=A

8 CONTACTS

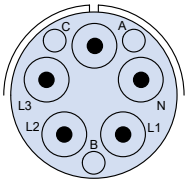

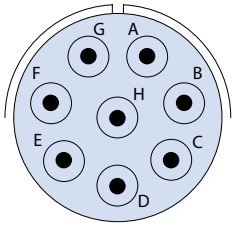

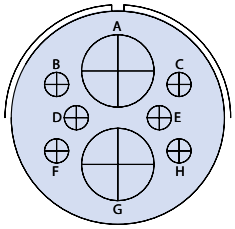

Arrangement	24-A8	32-A8	32-15
Contact Size	3/16, 5/8	8	2/0, 6/12
Service Rating	A	A	D

CONTACT LEGEND

© 2015 Glenair, Inc. U.S. CAGE Code 06324 Printed in Italy

Downloaded from Arrow.com.

Glenair Series ITS and ITS-RG
MIL-DTL-5015 Type Reverse Bayonet Connectors
Contact Arrangements Front View of Pin Insert

8 CONTACTS

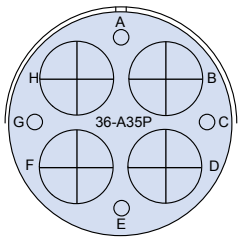

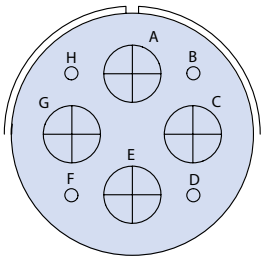

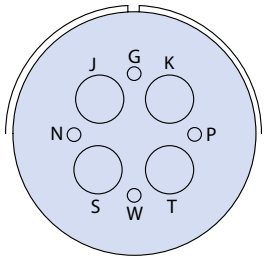

Arrangement	36-A35	40-A8	40-A10
Contact Size	4/16, 4/0	4/0, 4/16	4/4, 4/16
Service Rating	A	E	D

9 CONTACTS

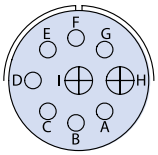

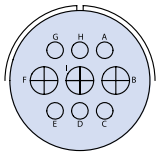

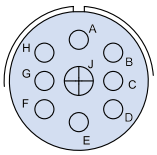

Arrangement	20-16	20-18	20-21
Contact Size	2/12, 7/16	3/12, 6/16	1/12, 8/16
Service Rating	A	A	A

9 CONTACTS

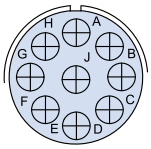

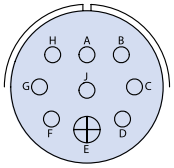

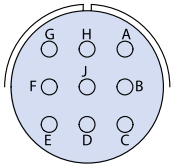

Arrangement	20-A9	22-17	22-20
Contact Size	12	1/12, 8/16	16
Service Rating	J=D; Bal=A	A=D; Bal=A	A

9 CONTACTS

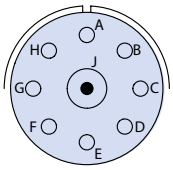

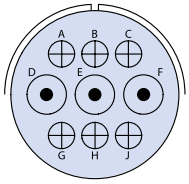

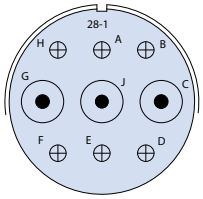

Arrangement	22-27	24-11	28-1
Contact Size	1/8, 8/16	3/8, 6/12	3/8, 6/12
Service Rating	J=D; Bal=A	A	A,J, E=D; Bal=A

CONTACT LEGEND

© 2015 Glenair, Inc. U.S. CAGE Code 06324 Printed in Italy

Downloaded from Arrow.com.

Glenair Series ITS and ITS-RG
MIL-DTL-5015 Type Reverse Bayonet Connectors
Contact Arrangements Front View of Pin Insert

9 CONTACTS

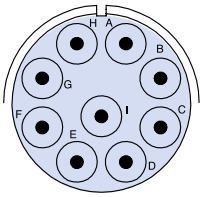

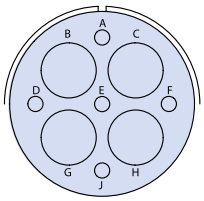

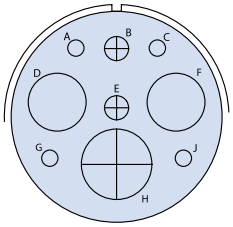

Arrangement	28-84	28-09	32-3
Contact Size	8	4/4, 5/16	1/0, 2/4, 2/12, 4/16
Service Rating	A	A	D

9 CONTACTS

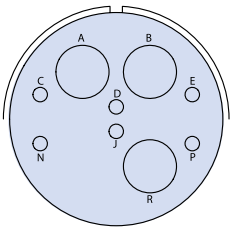

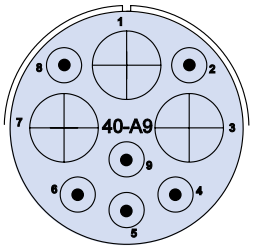

Arrangement	32-689	40-A9
Contact Size	3/4, 6/16	6/8, 3/0
Service Rating	A	A

10 CONTACTS

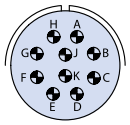

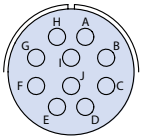

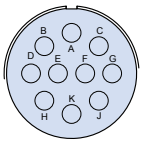

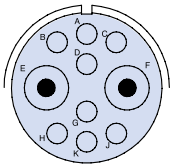

Arrangement	16-A10	18-1	18-19	22-82
Contact Size	18	16	16	8/16, 2/8
Service Rating	I	B,C,F,G= A; Bal=I	A	A

10 CONTACTS

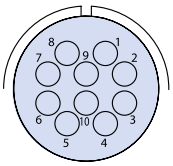

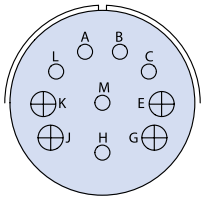

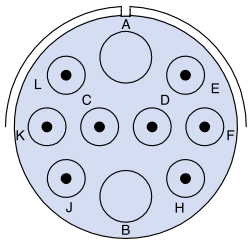

Arrangement	22-A10	28-19	36-A10
Contact Size	16	4/12, 6/16	2/4, 8/8
Service Rating	A	A, B= D; K, M=B; Bal=A	A

CONTACT LEGEND

© 2015 Glenair, Inc. U.S. CAGE Code 06324 Printed in Italy

Downloaded from Arrow.com.

Glenair Series ITS and ITS-RG
MIL-DTL-5015 Type Reverse Bayonet Connectors
Contact Arrangements Front View of Pin Insert

11 CONTACTS

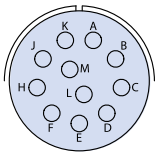
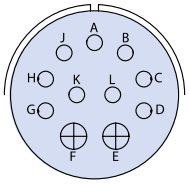
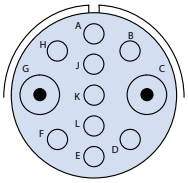
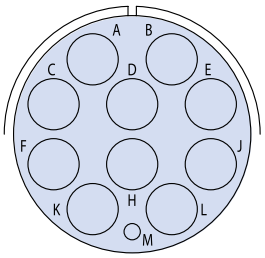

Arrangement	20-33	24-20	24-A11	40-67
Contact Size	16	2/12, 9/16	2/8, 9/16	10/4, 1/16
Service Rating	A	D	A	A

12 CONTACTS

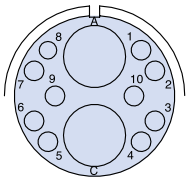
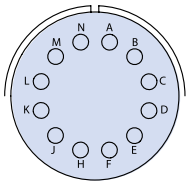
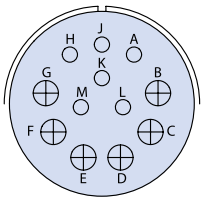

Arrangement	24-A12	24-19	28-9
Contact Size	2/4, 10/16	16	6/12, 6/16
Service Rating	A	A	D

12 CONTACTS

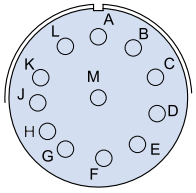
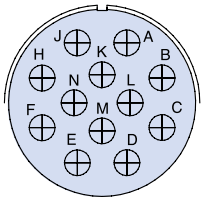

Arrangement	28-18	28-51
Contact Size	16	12
Service Rating	A,B=A; G,H,J,K,L=D; M=C Bal=I	D

13 CONTACTS

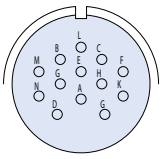
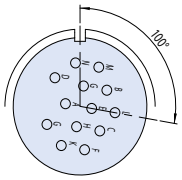

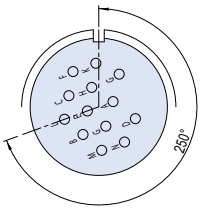

Arrangement	20-11	20-25(20-11 x 100°)	20-30 (20-11 x 250°)
Contact Size	16	16	13/16
Service Rating	I	I	I

CONTACT LEGEND

© 2015 Glenair, Inc. U.S. CAGE Code 06324 Printed in Italy

Downloaded from Arrow.com.

Glenair Series ITS and ITS-RG
MIL-DTL-5015 Type Reverse Bayonet Connectors
Contact Arrangements Front View of Pin Insert

13 CONTACTS

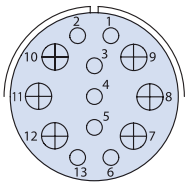
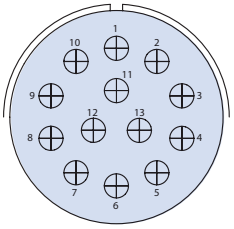

Arrangement	24-013	32-013
Contact Size	6/12, 7/16	12
Service Rating	A	D

14 CONTACTS

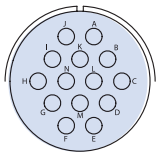
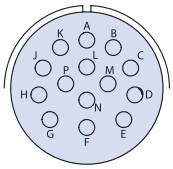
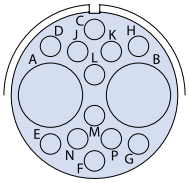
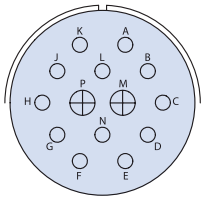

Arrangement	20-27	22-19	24-A14	28-2
Contact Size	16	16	2/4, 12/16	2/12, 12/16
Service Rating	A	A	A	D

14 CONTACTS

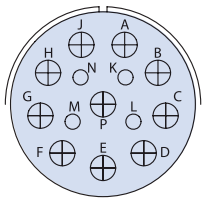
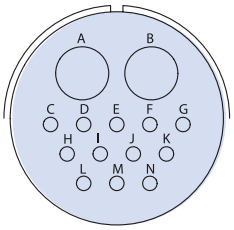
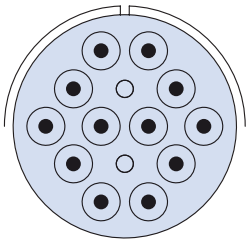

Arrangement	28-20	32-9	36-B78
Contact Size	10/12, 4/16	2/4, 12/16	12/8, 2/16
Service Rating	A	D	D

14 CONTACTS

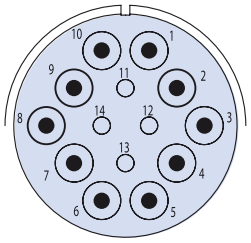
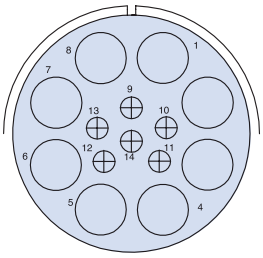

Arrangement	36-D78	40-A14
Contact Size	10/8, 4/16	6/12, 8/4
Service Rating	D	A

CONTACT LEGEND

© 2015 Glenair, Inc. U.S. CAGE Code 06324 Printed in Italy

Downloaded from Arrow.com.

Glenair Series ITS and ITS-RG
MIL-DTL-5015 Type Reverse Bayonet Connectors
Contact Arrangements Front View of Pin Insert

15 CONTACTS

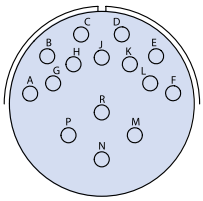

Arrangement	28-17
Contact Size	16
Service Rating	M,N,P=D; R=B; Bal=A

16 CONTACTS

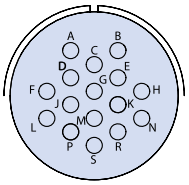

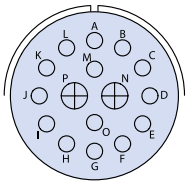

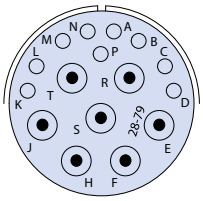

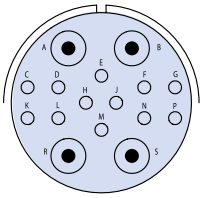

Arrangement	24-5	24-7	28-79	28-124
Contact Size	16	2/12,14/16	9/16, 7/8	12/16, 4/8
Service Rating	A	A	A	A

16 CONTACTS

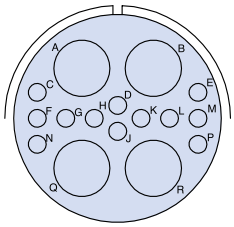

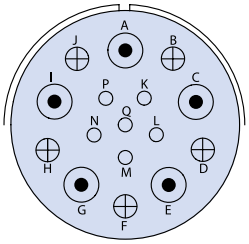

Arrangement	32-68	36-14
Contact Size	4/4, 12/16	5/8, 5/12, 6/16
Service Rating	A	D

17 CONTACTS

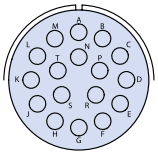

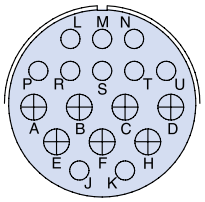

Arrangement	20-29	28-59
Contact Size	16	7/12, 10/16
Service Rating	A	A

CONTACT LEGEND

© 2015 Glenair, Inc. U.S. CAGE Code 06324 Printed in Italy

Downloaded from Arrow.com.

Glenair Series ITS and ITS-RG
MIL-DTL-5015 Type Reverse Bayonet Connectors
Contact Arrangements Front View of Pin Insert

19 CONTACTS

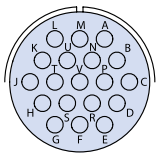
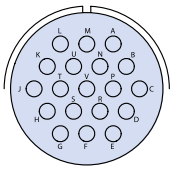
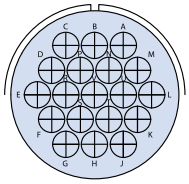

Arrangement	20-A48	22-14	24-67
Contact Size	16	16	12
Service Rating	I	A	A

19 CONTACTS

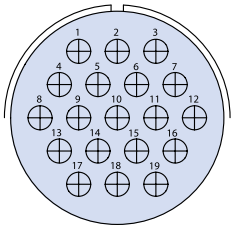
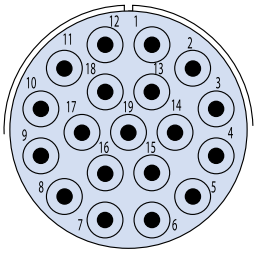

Arrangement	32-76	40-B19
Contact Size	12	8
Service Rating	A	A

20 CONTACTS

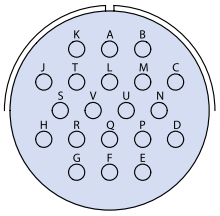
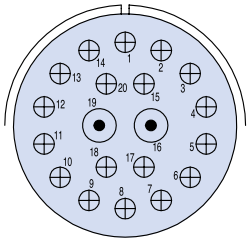

Arrangement	28-16	40-A20
Contact Size	16	2/8, 18/12
Service Rating	A	D

22 CONTACTS

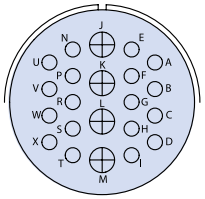
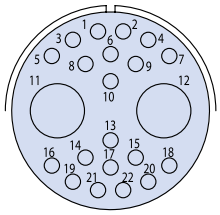
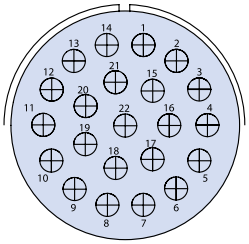

Arrangement	28-11	32-B22	36-22
Contact Size	4/12, 18/16	2/4, 20/16	12
Service Rating	A	A	D

CONTACT LEGEND

© 2015 Glenair, Inc. U.S. CAGE Code 06324 Printed in Italy

Downloaded from Arrow.com.

Glenair Series ITS and ITS-RG
MIL-DTL-5015 Type Reverse Bayonet Connectors
Contact Arrangements Front View of Pin Insert

23 CONTACTS

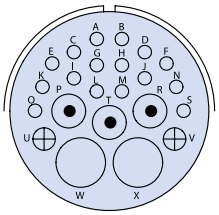

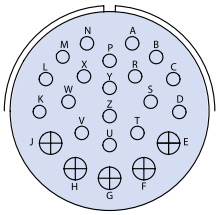

Arrangement	32-6	32-13
Contact Size	2/4, 3/8, 2/12, 16/16	5/12, 18/16
Service Rating	A	D

24 CONTACTS

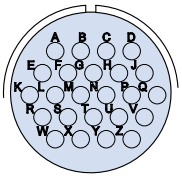

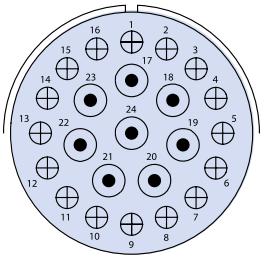

Arrangement	24-28	40-A24
Contact Size	16	8/8, 16/12
Service Rating	I	D

25 CONTACTS

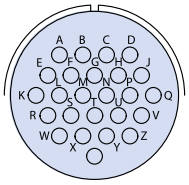

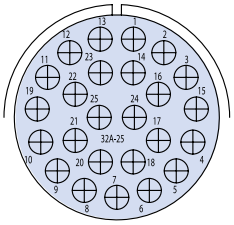

Arrangement	24-A25	32-A25
Contact Size	16	12
Service Rating	A	A

26 CONTACTS

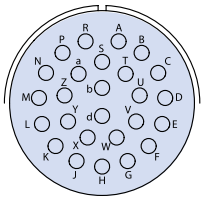

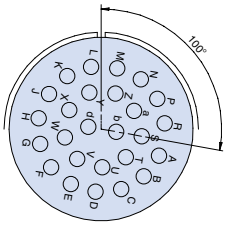

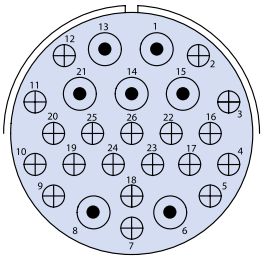

Arrangement	28-12	28-13 (28-12 x 100°)	40-26
Contact Size	16	16	7/8, 19/12
Service Rating	A	A	A

CONTACT LEGEND

20 · 18 · 16-16S · 12 · 8 · 4 · 0 · 4/0

© 2015 Glenair, Inc. U.S. CAGE Code 06324 Printed in Italy

Downloaded from Arrow.com.

Glenair Series ITS and ITS-RG
MIL-DTL-5015 Type Reverse Bayonet Connectors
Contact Arrangements Front View of Pin Insert

27 CONTACTS

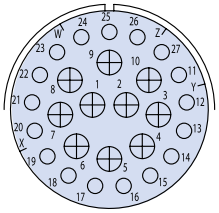

Arrangement	32-A27
Contact Size	10/12, 17/16
Service Rating	A

28 CONTACTS

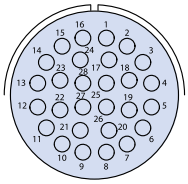

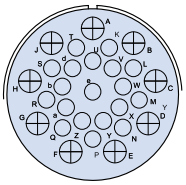

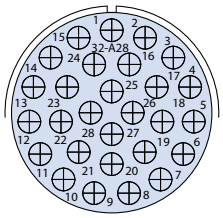

Arrangement	24-A28	28-A63	32-A28
Contact Size	16	9/12, 19/16	12
Service Rating	I	I	A

29 CONTACTS

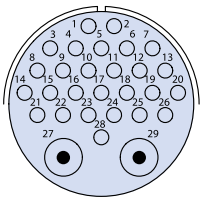

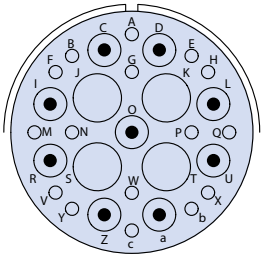

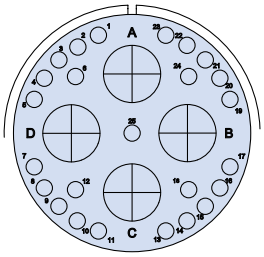

Arrangement	28-A29	40-10	40-B25
Contact Size	2/8, 27/16	4/4, 9/8, 16/16	25/16, 4/0
Service Rating	A	A	A

30 CONTACTS

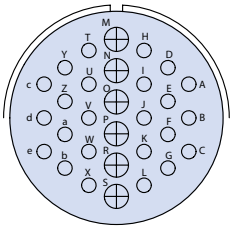

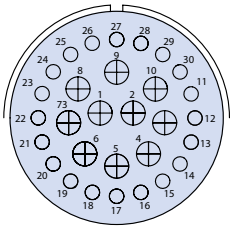

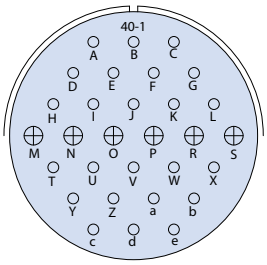

Arrangement	32-8	32-A30	40-1
Contact Size	6/12, 24/16	10/12, 20/16	6/12, 24/16
Service Rating	A	A	D

CONTACT LEGEND

© 2015 Glenair, Inc. U.S. CAGE Code 06324 Printed in Italy

Downloaded from Arrow.com.

Glenair Series ITS and ITS-RG
MIL-DTL-5015 Type Reverse Bayonet Connectors
Contact Arrangements Front View of Pin Insert

31 CONTACTS

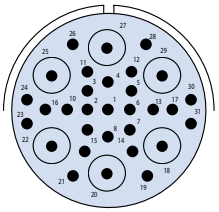
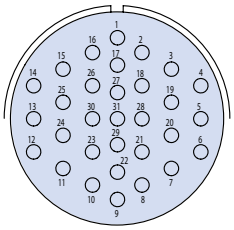
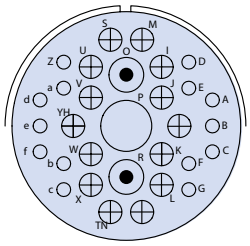

Arrangement	28-A31*	32-31	36-9
Contact Size	6/8, 25/20	16	1/4, 2/8, 14/12, 14/16
Service Rating	A	A	A

31 CONTACTS

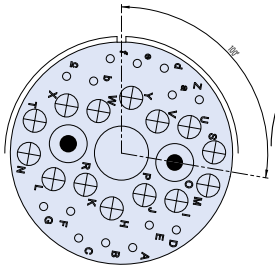
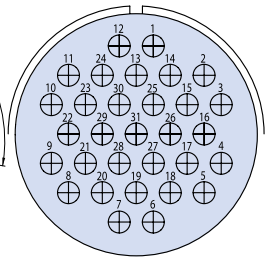
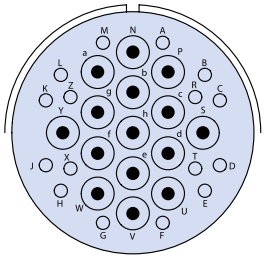

Arrangement	36-18 (36-9 x 100°)	40-31	40-A51
Contact Size	1/4, 2/8, 14/12, 14/16	12	15/8, 16/16
Service Rating	A	D	A

35 CONTACTS

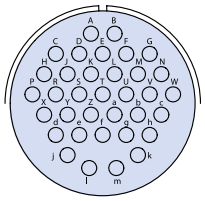
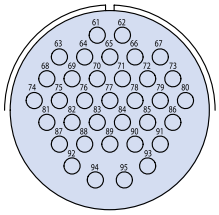
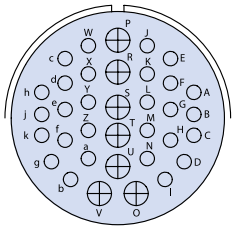

Arrangement	28-15	28-A35	32-7
Contact Size	16	16	7/12, 28/16
Service Rating	A	A	A, B,H, J=I Bal=A

35 CONTACTS

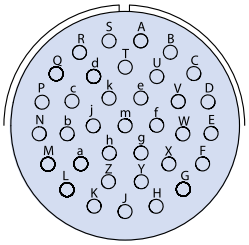
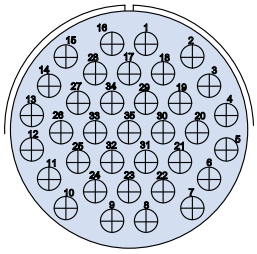

Arrangement	36-15	40-35
Contact Size	16	12
Service Rating	M=D; Bal=A	D

* Only Crimp Contact Version

CONTACT LEGEND

© 2015 Glenair, Inc. U.S. CAGE Code 06324 Printed in Italy

Downloaded from Arrow.com.

Glenair Series ITS and ITS-RG
MIL-DTL-5015 Type Reverse Bayonet Connectors
Contact Arrangements Front View of Pin Insert

36 CONTACTS

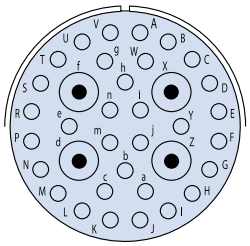

Arrangement	36-35
Contact Size	4/8, 32/16
Service Rating	A

37 CONTACTS

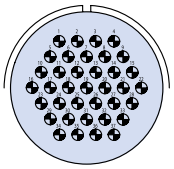

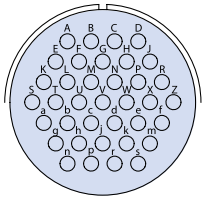

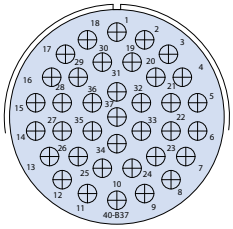

Arrangement	22-A37	28-21	40-B37
Contact Size	18	16	12
Service Rating	A	A	A

38 CONTACTS

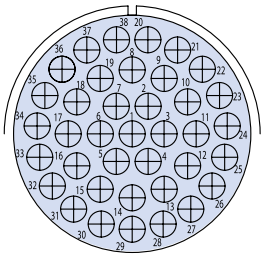

Arrangement	40-A38
Contact Size	12
Service Rating	A

39 CONTACTS

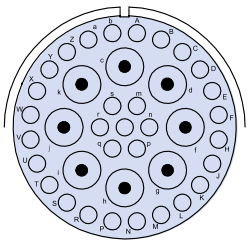

Arrangement	36-54 = 36-B39
Contact Size	8/8, 31/16
Service Rating	A

CONTACT LEGEND

© 2015 Glenair, Inc. U.S. CAGE Code 06324 Printed in Italy

Downloaded from Arrow.com.

Glenair Series ITS and ITS-RG
MIL-DTL-5015 Type Reverse Bayonet Connectors
Contact Arrangements Front View of Pin Insert

40 CONTACTS

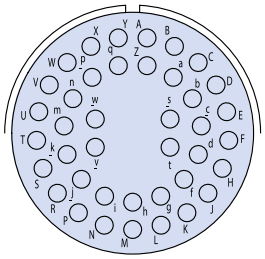

Arrangement	32-A40
Contact Size	16
Service Rating	A

42 CONTACTS

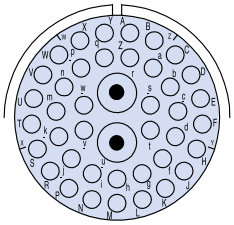

Arrangement	32-59
Contact Size	2/8, 40/16
Service Rating	A

44 CONTACTS

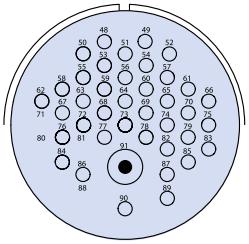

Arrangement	36-74
Contact Size	1/8, 43/16
Service Rating	A

47 CONTACTS

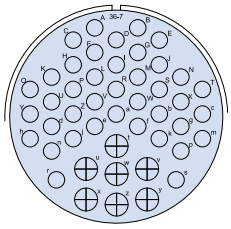

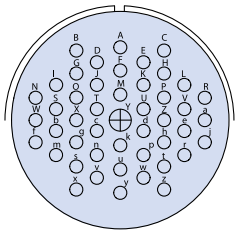

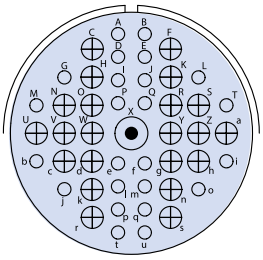

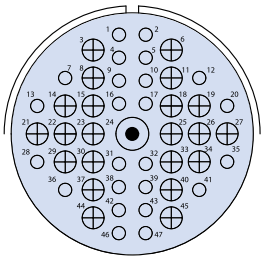

Arrangement	36-7	36-8	40-9	40-47
Contact Size	7/12, 40/16	1/12, 46/16	1/8, 22/12, 24/16	1/8, 22/12, 24/16
Service Rating	A	A	A	A

CONTACT LEGEND

© 2015 Glenair, Inc. U.S. CAGE Code 06324 Printed in Italy

Downloaded from Arrow.com.

Glenair Series ITS and ITS-RG
MIL-DTL-5015 Type Reverse Bayonet Connectors
Contact Arrangements Front View of Pin Insert

48 CONTACTS

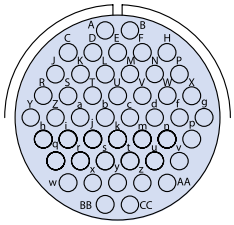

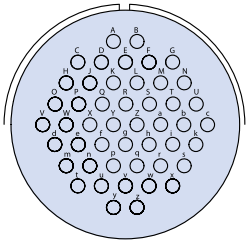

Arrangement	32-A48	36-10
Contact Size	16	16
Service Rating	I	A

51 CONTACTS

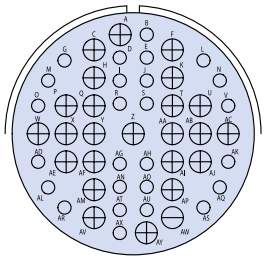

Arrangement	40-951
Contact Size	25/12, 26/16
Service Rating	A

54 CONTACTS

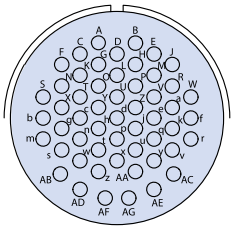

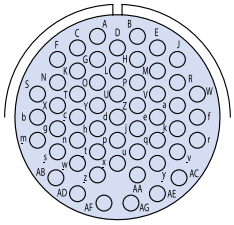

Arrangement	32-22	32-88
Contact Size	16	16
Service Rating	A	A

55 CONTACTS

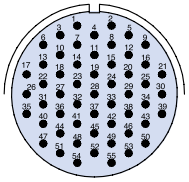

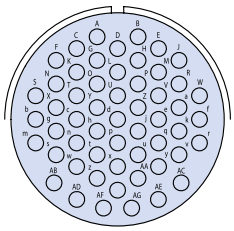

Arrangement	24-A55*	32-A55
Contact Size	20	16
Service Rating	I	A

* Only Crimp Contact Version

CONTACT LEGEND

© 2015 Glenair, Inc. U.S. CAGE Code 06324 Printed in Italy

Downloaded from Arrow.com.

Glenair Series ITS and ITS-RG
MIL-DTL-5015 Type Reverse Bayonet Connectors
Contact Arrangements Front View of Pin Insert

56 CONTACTS

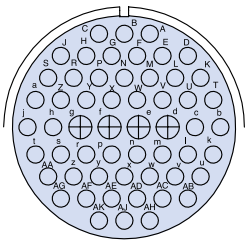

Arrangement	36-66
Contact Size	4/12, 52/16
Service Rating	A

60 CONTACTS

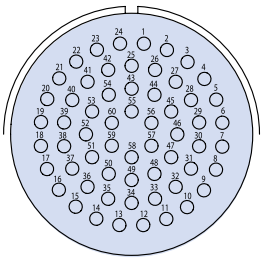

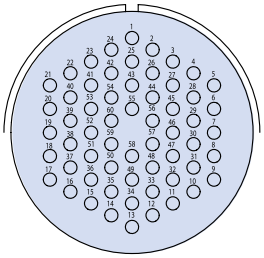

Arrangement	40-53	40-62
Contact Size	16	16
Service Rating	A	A

61 CONTACTS

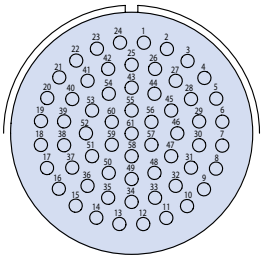

Arrangement	40-63
Contact Size	16
Service Rating	A

62 CONTACTS

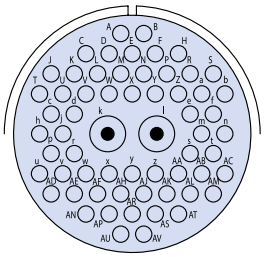

Arrangement	40-A62
Contact Size	2/8, 60/16
Service Rating	A

65 CONTACTS

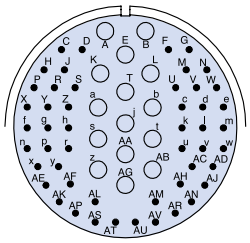

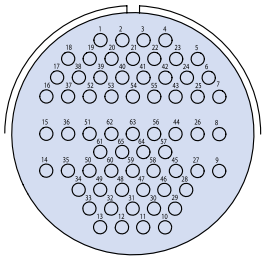

Arrangement	36-A99*	40-A65
Contact Size	15/16, 50/20	16
Service Rating	A	A

* Only Crimp Contact Version

CONTACT LEGEND

20 · 18 · 16-16S · 12 · 8 · 4 · 0 · 4/0

© 2015 Glenair, Inc. U.S. CAGE Code 06324 Printed in Italy

Downloaded from Arrow.com.

Glenair Series ITS and ITS-RG
MIL-DTL-5015 Type Reverse Bayonet Connectors
Contact Arrangements Front View of Pin Insert

70 CONTACTS

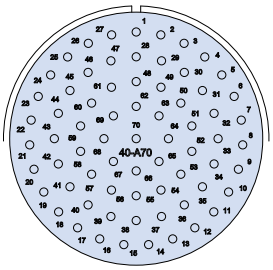

Arrangement	40-A70
Contact Size	16
Service Rating	A

72 CONTACTS

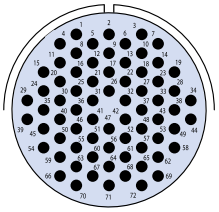

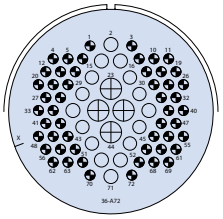

Arrangement	28-72 *	36-A72
Contact Size	20	4/12, 16/16, 52/18
Service Rating	I	I

85 CONTACTS

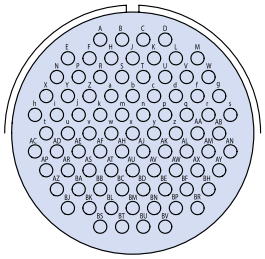

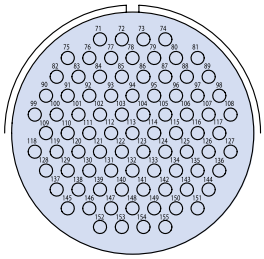

Arrangement	40-56	40-A56
Contact Size	16	16
Service Rating	A	A

100 CONTACTS

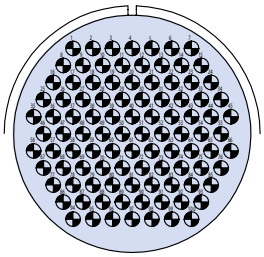

Arrangement	40-100
Contact Size	18
Service Rating	A

150 CONTACTS

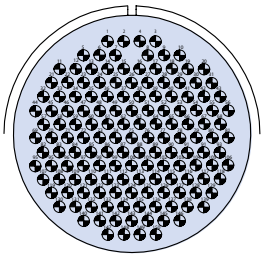

Arrangement	40-150
Contact Size	18
Service Rating	I

* Only Crimp Contact Version

CONTACT LEGEND

© 2015 Glenair, Inc. U.S. CAGE Code 06324 Printed in Italy

Downloaded from Arrow.com.

Glenair Series ITS and ITS-RG
MIL-DTL-5015 Type Reverse Bayonet Connectors
Contact Arrangement Tables

Arrangement	Rating	Contact Number	Contact Size								
			4/0	0	4	8	12	16	16S	18	20
10SL-3	A	3							3		
10SL-4	A	2							2		
14S-1	A	3							3		
14S-2	I	4							4		
14S-5	I	5							5		
14S-6	I	6							6		
14S-7	A	3							3		
14S-9	A	2							2		
14S-07	I	7							7		
16S-1	A	7							7		
16S-4	D	2							2		
16S-5	A	3							3		
16S-8	A	5							5		
16-2	E	1					1				
16-7	A	3				1		2			
16-9	A	4					2	2			
16-10	A	3					3				
16-11	A	2					2				
16-12	A	1			1						
16-A10	I	10								10	
18-1	I	10						10			
18-3	D	2					2				
18-4	D	4						4			
18-5	D	3					2	1			
18-6	D	1			1						
18-06	A	6					4	2			
18-7	B	1				1					
18-8	A	8					1	7			
18-9	I	7					2	5			
18-10	A	4					4				
18-10S MT	A	4					4				
18-11	A	5					5				
18-12	A	6						6			
18-13	A	4				1	3				
18-16	C	1					1				
18-19	A	10						10			
18-20	A	5						5			
18-22	D	3						3			
18-30 (18-20x110°)	A	5						5			
20-2	D	1		1							
20-3	D	3					3				
20-4	D	4					4				
20-6	D	3						3			
20-7	A	8						8			
20-8	I	6				2		4			
20-9	A	8					1	7			
20-11	I	13						13			
20-14	A	5				2	3				
20-15	A	7					7				
20-16	A	9					2	7			
20-17	A	6					5	1			
20-18	A	9					3	6			
20-19	A	3				3					
20-21	A	9					1	8			
20-22	A	6				3		3			
20-23	A	2				2					
20-24	A	4				2		2			
20-A24	A	4				2		2			
20-25 (20-11x100°)	I	13						13			
20-27	A	14						14			
20-29	A	17						17			
20-30 (20-11x250°)	I	13						13			

Arrangement	Rating	Contact Number	Contact Size							
			4/0	0	4	8	12	16	18	20
20-33	A	11						11		
20-A8	I	8				2		6		
20-A9	A	9					9			
20-A48	I	19						19		
20-B8	A	8					4	4		
22-1	D	2				2				
22-2	D	3				3				
22-4	A	4				2	2			
22-5	D	6					2	4		
22-7	E	1		1						
22-9	E	3					3			
22-10	E	4						4		
22-11	B	2						2		
22-12	D	5				2		3		
22-14	A	19						19		
22-15	A	6					5	1		
22-17	A	9					1	8		
22-18	A	8						8		
22-19	A	14						14		
22-20	A	9						9		
22-21	A	3		1				2		
22-22	A	4				4				
22-23	A	8					8			
22-27	A	9				1		8		
22-28	A	7					7			
22-34	D	5					3	2		
22-82	A	10				2		8		
22-A10	A	10						10		
22-A37	A	37							37	
22-22S MT	A	4				4				
24-2	D	7					7			
24-3	A	7					2	5		
24-4	D	4		1				3		
24-5	A	16						16		
24-06	D	6				4		2		
24-6	A	8					8			
24-07	D	7					7			
24-7	A	16					2	14		
24-9	A	2			2					
24-10	A	7				7				
24-11	A	9				3	6			
24-12	A	5			2		3			
24-013	A	13					6	7		
24-19	A	12						12		
24-20	D	11					2	9		
24-22	D	4				4				
24-27	E	7						7		
24-28	I	24						24		
24-67	A	19					19			
24-A1	B	1		1						
24-A8	A	8				5		3		
24-A11	A	11				2		9		
24-A12	A	12			2			10		
24-A14	A	14			2			12		
24-A25	A	25						25		
24-A28	I	28						28		
24-A55*	I	55								55
24-G5	A	5				5				
28-1	A	9				3	6			
28-2	D	14					2	12		
28-3	E	3				3				
28-6	D	3			3					

* Only Crimp Contact Version

© 2015 Glenair, Inc.

U.S. CAGE Code 06324

Printed in Italy

Downloaded from Arrow.com.

Glenair Series ITS and ITS-RG
MIL-DTL-5015 Type Reverse Bayonet Connectors
Contact Arrangement Tables

Arrangement	Rating	Contact Number	Contact Size							
			4/0	0	4	8	12	16	18	20
28-09	A	9			4			5		
28-9	D	12					6	6		
28-10	A	7			2	2	3			
28-11	A	22					4	18		
28-12	A	26						26		
28-13 (28-12x100°)	A	26						26		
28-15	A	35						35		
28-16	A	20						20		
28-17	A	15						15		
28-18	I	12						12		
28-19	A	10					4	6		
28-20	A	14					10	4		
28-21	A	37						37		
28-22	D	6			3			3		
28-51	D	12					12			
28-59	A	17					7	10		
28-70	A	7				7				
28-72*	I	72								72
28-79	A	16				7		9		
28-84	A	9				9				
28-124	A	16				4		12		
28-A29	A	29				2		27		
28-A31*	A	31				6				25
28-A35	A	35						35		
28-A63	I	28					9	19		
28-B1	B	1		1						
28-B2	E	2				2				
32-1	D	5		2			3			
32-2	E	5			3			2		
32-3	D	9		1	2		2	4		
32-5	D	2		2						
32-6	A	23			2	3	2	16		
32-7	I	35					7	28		
32-8	A	30					6	24		
32-9	D	14			2			12		
32-013	D	13					13			
32-13	D	23					5	18		
32-15	D	8		2			6			
32-17	D	4			4					
32-22	A	54						54		
32-31	A	31						31		
32-59	A	42				2		40		
32-68	A	16			4			12		
32-689	A	9			3			6		
32-A5GM	A	5			5					
32-76	A	19					19			
32-79	D	5			4	1				
32-88	A	54						54		
32-A1*	A	1	1							
32-A3	E	3			3					
32-A8	A	8				8				
32-A25	A	25					25			
32-A27	A	27					10	17		
32-A28	A	28					28			
32-A30	A	30					10	20		
32-A40	A	40						40		
32-A48	I	48						48		
32-A55	A	55						55		
32-B22	A	22			2			20		
36-01*	C	1	1							
36-3	D	6		3			3			
36-4	A	3		3						
36-5	A	4		4						

Arrangement	Rating	Contact Number	Contact Size							
			4/0	0	4	8	12	16	18	20
36-6	A	6		2	4					
36-7	A	47					7	40		
36-8	A	47					1	46		
36-9	A	31			1	2	14	14		
36-10	A	48						48		
36-14	D	16				5	5	6		
36-15	A	35						35		
36-18 (36-9x100°)	A	31			1	2	14	14		
36-22	D	22					22			
36-35	A	36				4		32		
36-54=36-B39	A	39				8		31		
36-66	A	56					4	52		
36-74	A	44				1		43		
36-77	D	7			7					
36-A7	A	7		3	2		2			
36-A10	A	10			2	8				
36-A35	A	8		4				4		
36-A51	D	6		3	2			1		
36-A72	I	72					4	16	52	
36-A99*	A	65						15		50
36-B61	E	6			2		4			
36-B78	D	14				12		2		
36-B90	D	1	n.1 Special Contact							
36-D78	D	14				10		4		
40-1	D	30					6	24		
40-9	A	47				1	22	24		
40-10	A	29			4	9		16		
40-26	A	26				7	19			
40-31	D	31					31			
40-35	D	35					35			
40-47	A	47				1	22	24		
40-53	A	60						60		
40-56	A	85						85		
40-62	A	60						60		
40-63	A	61						61		
40-67	A	11			10			1		
40-100	A	100							100	
40-150	I	150							150	
40-951	A	51					25	26		
40-A3	A	5		3			2			
40-A4	A	6		4			2			
40-A5	A	5		3	1		1			
40-A5GM	A	5		5						
40-A6	B	6					6			
40-A8	E	8		4				4		
40-A9	A	9		3		6				
40-A10	D	8			4			4		
40-A14	A	14			8		6			
40-A20	D	20				2	18			
40-A24	D	24				8	16			
40-A38	A	38					38			
40-A51	A	31				15		16		
40-A55	A	5		5						
40-A56	A	85						85		
40-A62	A	62				2		60		
40-A65	A	65						65		
40-A70	A	70						70		
40-B4	E	4		4						
40-B19	A	19				19				
40-B25	A	29		4				25		
40-B37	A	37					37			
40-D4	C	4				4				
40-G4	E	4				4				

* Only Crimp Contact Version

© 2015 Glenair, Inc.

U.S. CAGE Code 06324

Printed in Italy

Downloaded from Arrow.com.

Glenair Series ITS and ITS-RG
MIL-DTL-5015 Type Reverse Bayonet Connectors
Insert Rotation Alternate Positions

Arrangement	α ± 2°			
	W	X	Y	Z
10SL-3				
10SL-4				
14S-1	90	180	270	
14S-2		120	240	
14S-5		110		
14S-6	90			
14S-7	90	180	270	
14S-9	70	145	215	290
14S-07				
16S-1	80			280
16S-4	35	110	250	325
16S-5	70	145	215	290
16S-8		170	265	
16-2				
16-7	80	110	250	280
16-9	35	110	250	325
16-10	90	180	270	
16-11	35	110	250	325
16-12				
16-A10	35	112	235	315
18-1	70	145	215	290
18-3	35	110	250	325
18-4	35	110	250	325
18-5	80	110	250	280
18-6				
18-06	180			
18-7				
18-8	70			290
18-9	80	110	250	280
18-10		120	240	
18-10S MT				
18-11		170	265	
18-12	80			280
18-13	80	110	250	280
18-16				
18-19		120	240	
18-20	90	180	270	
18-22	70	145	215	290
18-29	90	180	270	
18-30				
20-2				
20-3	70	145	215	290
20-4	45	110	250	

Arrangement	α ± 2°			
	W	X	Y	Z
20-6	70	145	215	290
20-7	80	110	250	280
20-8	80	110	250	280
20-9	80	110	250	280
20-11				
20-14	80	110	250	280
20-15	80			280
20-16	80	110	250	280
20-17	90	180	270	
20-18	35	110	250	325
20-19	90	180	270	
20-21	35	110	250	325
20-22•	80	110*	250*	280
20-23	35	110	250	325
20-24	35	110	250	325
20-A24	55	125	200	340
20-25				
20-27	35	110	250	325
20-29	80			280
20-30				
20-33				280
20-A8				
20-A9		110	250	
20-A48		80	280	
20-B8	80	110	250	280
22-1	35	110	250	325
22-2	70	145	215	290
22-4	35	110	250	325
22-5	35	110	250	325
22-7				
22-9	70	145	215	290
22-10	35	110	250	325
22-11	35	110	250	325
22-12	80	110	250	280
22-14	80	110	250	280
22-15	80	110	250	280
22-17	80	110	250	280
22-18	80	110	250	280
22-19	80	110	250	280
22-20	35	110	250	325
22-21	80	110	250	280
22-22		110	250	
22-23	35		250	

Arrangement	α ± 2°			
	W	X	Y	Z
22-27	80		250	280
22-28	80			280
22-34	80	110	250	280
22-82	80	110	250	280
22-A10		120	240	
22-A37	80	112	250	280
22-22S MT				
24-2	80			280
24-3	80	110	250	280
24-4	80	110	250	280
24-5	80	110	250	280
24-06	40			320
24-6	80	110	250	280
24-07	80			280
24-7	80	110	250	280
24-9	35	110	250	325
24-10	80			280
24-11	35	110	250	325
24-12	80	110	250	280
24-013				
24-19				
24-20	80	110	250	280
24-22	45	110	250	
24-27	80			280
24-28	80	110	250	280
24-67	80			335
24-A1				
24-A8				
24-A11	35	110	250	325
24-A12				
24-A14				
24-A25	80	110	250	280
24-A28	65	146	235	
24-A55	80	110	250	280
24-G5	70	110	240	270
28-1	80	110	250	280
28-2	35	110	250	325
28-3	70	145	215	290
28-6	70	145	215	290
28-09	110	250	260	280
28-9	80	110	250	280
28-10	80	110	250	280
28-11	80	110	250	280

* Rotations are for visual reference only, mating might be possible
• Custom rotations can be available upon specific request

© 2015 Glenair, Inc. U.S. CAGE Code 06324 Printed in Italy

Downloaded from Arrow.com.

Glenair Series ITS and ITS-RG
MIL-DTL-5015 Type Reverse Bayonet Connectors
Insert Rotation Alternate Positions

Arrangement	α ± 2°			
	W	X	Y	Z
28-12	90	180	270	
28-13				
28-15	80	110	250	280
28-16	80	110	250	280
28-17	80	110	250	280
28-18	70	145	215	290
28-19	80	110	250	280
28-20	80	110	250	280
28-21	80	110	250	280
28-22	70	145	215	290
28-51	80	135	190	
28-59	35	110	250	325
28-70	80			280
28-72	72	144	216	288
28-79	70	133	227	290
28-84	45	157	90	135
28-124	80	110	250	280
28-A29	80	110	250	280
28-A31	35		260	310
28-A35	80	110	250	280
28-A63		100	260	
28-B1				
28-B2				
32-1	80	110	250	280
32-2	70	145	215	290
32-3	80	110	250	280
32-5	35	110	250	325
32-6	80	110	250	280
32-7	80	125	235	280
32-8	80	125	235	280
32-9	80	110	250	280
32-013	65	130	230	295
32-13	80	110	250	280
32-15	35	110	250	280
32-17	45	110	250	
32-22	80	110	250	280
32-31	80	125	215	280
32-59	36	108	252	324
32-68	65	135	225	275
32-689				
32-A5 GM				

Arrangement	α ± 2°			
	W	X	Y	Z
32-76	80	110	250	280
32-79				
32-88	80	110	250	280
32-A1				
32-A3	22	44	76	98
32A-8	35	122		315
32-A25	60	120		
32-A27	30	115	285	335
32-A28				
32-A30				
32-A40	35	130		
32-A48	80	125	235	
32-A55	80	110	250	280
32-B22	35	110	250	325
36-01				
36-3	70	145	215	290
36-4	70	145	215	290
36-5		120	240	
36-6	35	110	250	325
36-7	80	110	250	280
36-8	80	110	250	280
36-9	80	125	235	280
36-10	80	125	235	280
36-14	90	180	270	
36-15	60	125	245	305
36-18				
36-22	80	110	250	280
36-35				
36-54=36-B39	67			
36-66	110	250	260	280
36-74				
36-77	45	90		
36-A7				
36-A10	45	110	250	315
36-A35				
36-A51	45	135	225	315
36-A72		110		
36-A99	30	135		
36-B61				
36-B78	35	106	254	325
36-B90				

Arrangement	α ± 2°			
	W	X	Y	Z
36-D78	35	106	254	325
40-1	65	130	235	300
40-9	65	125	225	310
40-10	65	125	225	310
40-26	80	110	250	280
40-31	80	110	250	280
40-35	70	130	230	290
40-47	65	125	225	310
40-53	80	110	250	280
40-56	72	144	216	288
40-62	30	130	220	290
40-63	80			280
40-67	70	110	230	280
40-100	30	105	230	315
40-150				
40-951	90	105		
40-A3	70	145	215	290
40-A4	50	120	240	325
40-A5	33			270
40-A6	35	110	250	280
40-A5GM	33			270
40-A8	35	110	250	325
40-A9				
40-A10	65			
40-A14	80	135	195	
40-A20	80	110	250	280
40-A24				
40-A38	37			
40-A51				
40-A55				
40-A56	72	144	216	288
40-A62	80	130	230	280
40-A65	70	145	215	285
40-A70	80	110	250	280
40-B4	45	110	215	300
40-B19	35	105	255	325
40-B25				
40-B37				
40-D4				
40-G4				

Insert Rotation (front view)

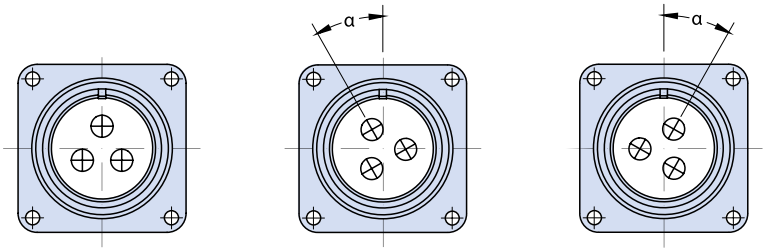

Normal Position

Alternate Position with Socket Contacts

Alternate Position with Pin Contacts

© 2015 Glenair, Inc.

U.S. CAGE Code 06324

Printed in Italy

Downloaded from Arrow.com.

Glenair Series ITS and ITS-RG
MIL-DTL-5015 Type Reverse Bayonet Connectors
Insert Arrangement for Thermocouple Contacts

Arrangement	Number of contacts		Standard Insert	Alternate Position Rotation	Contact Material
	#16	#12			
10SL-51	2	—	10SL-4	45	A=Fe - B=Con
10SL-52	2	—	10SL-4	45	A=Cu- B=Con
10SL-53	2	—	10SL-4	45	A=Al - B=Ch
10SL-54	3	—	10SL-3	—	A=Fe - B=Con - C=Cu
10SL-55	3	—	10SL-3	—	A=Al - B=Ch - C=Cu
10SL-56	2	—	10SL-4	—	A=Al - B=Ch
10SL-57	2	—	10SL-4	—	A=Con - B=Ch
14S-51	2	—	14S-9	90	A=Al - B=Ch
14S-52	4	—	14S-2	45	A,B=Cu - C=Al - D=Ch
14S-53	2	—	14S-9	90	A=Fe - B=Con
14S-54	6	—	14S-6	45	A,C,E=Fe - B,D,F=Con
14S-55	4	—	14S-2	45	A,C=Fe - B,D=Con
14S-56	4	—	14S-2	45	A=Fe - B=Con - C, D=Cu
14S-57	4	—	14S-2	45	A,C=Al - B,D=Ch
14S-58	3	—	14S-4	45	A=Al - B=Ch - C=Cu
14S-59	2	—	14S-9	90	A=Cu- B=Con
14S-60	2	—	14S-9	—	A=Al - B=Ch
14S-61	6	—	14S-6	45	A=Al - B=Ch - C=Fe - D=Con - E,F=Cu
14S-63	6	—	14S-6	—	A,C=Al - B,D=Ch - E=Fe - F=Con
14S-64	4	—	14S-2	—	A,C=Con - B,D=Cu
14S-65	6	—	14S-6	—	A,C,E=Cu - B,D,F=Con
14S-67	6	—	14S-6	—	A=Al - B=Ch - Bal=Cu
14S-68	4	—	14S-2	45	A=Ch - B=Con - C,D=Cu
14S-69	3	—	14S-7	—	A=Con - B=Ch - C=Cu
14S-70	4	—	14S-2	—	A=Ch - D=Al -Bal=Cu
14S-71	4	—	14S-2	—	n°2=Ch - n°2=Con
14S-72	4	—	14S-2	—	A,C=Fe - B,D=Con
14S-73	4	—	14S-2	—	A,C=Ch - B,D=Al
14S-74	4	—	14S-2	—	A=Al - B=Ch - Bal=Cu
14S-77	6	—	14S-6	—	A,B,C=Al - D,E,F=Ch
14S-78	4	—	14S-2	—	A,B=Al - C,D=Ch
14S-79	5	—	14S-5	—	n°1=Al - n°1=Ch - Bal=Cu
14S-80	3	—	14S-7	—	n°2=Fe - n°1=Con
16S-50	5	—	16S-8	—	n°1=Con - n°1=Fe - n°3=Cu
16S-51	7	—	16S-1	—	A,F=Al - B=Ch - Bal=Cu
16S-52	2	—	16S-4	—	A=Ch - B=Al
16S-53	3	—	16S-5	—	A,B,C=Fe
16S-54	7	—	16S-1	—	A=Al - B=Ch - Bal=Cu
16S-55	2	—	16S-4	—	n°1=Con - n°1=Cu
16S-56	7	—	16S-1	—	A,D=Fe - B,E=Con - Bal=Cu
16S-57	3	—	16S-5	—	n°1=Ch - n°1=Al - n°1=Cu
16S-58	5	—	16S-8	—	n°2=Fe - n°2=Con- n°1=Cu

Materials description key: AL = Alumel, Ch = Chromel, Con = Constantan, Cu = Copper, Fe = Iron, PhBz = Phosphor Bronze. Dummy = Wire hole Plug

Degrees α ±2°

© 2015 Glenair, Inc. U.S. CAGE Code 06324 Printed in Italy

Downloaded from Arrow.com.

Glenair Series ITS and ITS-RG
MIL-DTL-5015 Type Reverse Bayonet Connectors
Insert Arrangement for Thermocouple Contacts

Arrangement	Number of contacts		Standard Insert	Alternate Position Rotation	Contact Material
	#16	#12			
16S-59	7	—	16S-1	—	n°3=Al - n°3=Ch- n°1=Cu
16-13	2	—	16-13	—	A=Fe - B=Con
16-52	2	—	16-11	90	A=Al - B=Ch
16-53	2	2	16-9	70	A=Al - C=Ch - B,D=Cu
16-55	—	3	16-10	45	A=Al - B=Ch - C=Cu
16-56	—	2	16-13	90	A=Con - B=Cu
16-57	—	3	16-10	—	A=Al - B=Cu - C=Ch
16-58	—	3	16-10	—	A=Con - B,C=Cu
16-60	—	2	16-13	—	A=Al - B=Ch
18-15	—	4	18-15	—	A,C=Fe - B,D=Con
18-41	4	—	18-4	—	A,C=Fe - B,D=Con
18-42	4	—	18-4	—	A,C=Al - B,D=Ch
18-43	4	—	18-4	—	A,C=Ch - B,D=Con
18-44	3	—	18-22	—	n°1=Al- n°1=Ch - n°1=Cu
18-45	5	—	18-20	—	A=Fe - B=Con - Bal=Cu
18-46	4	—	18-4	—	n°1=Ch - n°1=Al - n°2=Cu
18-47	4	—	18-4	—	A,C=Ch - B,D=Al
18-49	10	—	18-1	—	n°3=Fe - n°3=Con - Bal=Cu
18-50	—	2	18-3	—	n°1=Al - n°1=Ch
18-51	6	—	18-12	—	A,B=Fe - E,D=Con - C,F=Cu / (A=Fe - B,E=Con - D=Cu - C.F=Dummy)
18-52		5	18-11	—	A=Fe - B=Con - C=Ch - D=Al - E=Cu / (A=Fe - B=Con - C=Ch - D=Al - E=Dummy)
18-53	6	—	18-12	—	A,D=Fe - B,E=Con - C,F=Cu / (A,D=Fe - B,E=Con - C,F=Dummy)
18-54	—	4	18-15	—	A,C=Al - B,D=Ch
18-56	10	—	18-1	45	A,C,E,G,I=Fe - B,D,F,H,J=Con
18-57	6	—	18-12	45	A,C,E=Al - B,D,F=Ch
18-59	6	—	18-12	45	A,C=Fe - B,E,F=Con - D=Cu
18-60	—	5	18-11	45	A,D=Al - B,C=Ch - E=Cu
18-61	6	—	18-12	—	A,C=Fe - B,D=Con - E=Ch - F=Al
18-62	6	—	18-12	—	A,B,C=Fe - D,E,F=Con
18-63	—	4	18-15	—	A,C=Con - B,D=Cu
18-65	6	—	18-12	—	A=Fe - B=Con - Bal=Cu
18-66	10	—	18-1	—	A,C,E,G,I=Cu - B,D,F,H,J=Con
18-67	6	—	18-12	—	A,C,E=Cu- B,D,F=Con
18-68	5	—	18-11	—	A,D=Al - B,C=Ch - E=Cu
18-69	10	—	18-1	—	A=Al - B,C=Ch - Bal=Cu
18-70	—	5	18-11	—	A=Fe - B=Con - C=Ch - D=Al - E=Cu
18-71	6	—	18-12	—	n°2=Al - n°2=Ch - n°2=Cu
18-72	—	4	18-10	45	n°2=Fe - n°2=Con
18-73	—	4	18-10	—	n°2=Fe - n°2=Con
18-74	—	4	18-10	—	n°2=Con - n°2=Cu
18-75	10	—	18-1	—	n°2=Al - n°2=Ch - Bal=Cu

Materials description key: AL = Alumel, Ch = Chromel, Con = Constantan, Cu = Copper, Fe = Iron, PhBz = Phosphor Bronze. Dummy = Wire hole Plug

Degrees α ±2°

© 2015 Glenair, Inc.

GLENAIR, INC. • 1211 AIR WAY • GLENDALE, CA 91201-2497 • 818-247-6000 • FAX 818-500-9912
www.glenair.com **E-Mail: sales@glenair.com**

Downloaded from Arrow.com.

Glenair Series ITS and ITS-RG
MIL-DTL-5015 Type Reverse Bayonet Connectors
Insert Arrangement for Thermocouple Contacts

Arrangement	Number of contacts		Standard Insert	Alternate Position Rotation	Contact Material
	#16	#12			
20-222	3	3 #8	20-22	-	B=Fe - D=Con - Bal=Cu
20-50	17	-	20-29	-	n°7=Al - n°7=Ch - n°3=Cu
20-51	8	-	20-7	-	A,C,E,G=Ch - B,D,F,H=Al
20-52	-	4	20-4	315	A=Fe - B=Con - C=Ch - D=Al
20-56	-	8	20-7	45	A,B,G,H=Fe - C,D,E,F=Con
20-60	8	-	20-7	45	D=Ch - E=Al - Bal=Cu
20-61	17	-	20-29	45	A,B,M=Cu - Bal=Con
20-62	-	7	20-15	80	A,C,E=Al - B,D,F=Ch - G=Cu
20-64	14	-	20-27	-	H=Al - C=Ch - Bal=Cu
20-641	14	-	20-27	-	A,B,C,D,E,F,G=Al - H,I,J,K,L,M,N=Ch
20-65	14	-	20-27	-	A,B,C,D,E,F,G=Fe - H,I,J,K,L,M,N=Con
20-67	7	2	20-16	-	H=Al - I=Ch - Bal=Cu
20-68	8	-	20-7	-	A,B,G,H=Con - C,D,E,F=Cu
20-69	14	-	20-27	-	A,B,C,D,E,F,G=Cu - H,I,J,K,L,M,N=Con
20-70	17	-	20-29	-	A,C,E,G,J,L,N,R,T=Fe - B,D,F,H,K,M,P,S=Con
20-71	17	-	20-29	-	S=Al - R=Ch - Bal=Cu
20-74	17	-	20-29	-	A,C,E,G,J,L,N,R=Fe - B,D,F,H,K,M,P,S=Con - T=Cu
20-75	-	7	20-15	-	G=Al - Bal=Ch
20-76	17	-	20-29	-	n°8=Ch - n°8=Al - n°1=Cu
20-78	-	4	20-4	-	A=Fe - B=Con - Bal=Cu
20-80	-	3	20-3	-	A=Al - C=Ch - B=Cu
20-81	8	1	20-21	-	n°4=Al - n°4=Ch - I=Cu
20-82	14	-	20-27	-	n°4=Al - n°10=Cu
20-83	14	-	20-27	-	A,B=Ch - C,D=Al - Bal=Cu
20-84	3	3#8	20-22	-	B=Al - D=Ch - Bal=Cu
20-85	14	-	20-27	-	n°12=Ch - n°1=Al - n°1=Cu
20-86	14	-	20-27	-	n°2=Al - n°12=Ch
22-36	-	8	22-36	-	B,D,F,H=Con - A,C,E,G=Fe
22-57	19	-	22-14	45	A,C,E,G,J,L,N,R=Fe - B,D,F,H,K,M,P,S=Con - T,U,V=Cu
22-60	19	-	22-14	45	U=Al - N=Ch - Bal=Cu
22-62	-	8	22-23	300	A,B,F,G=Al - C,D,E,H=Ch
22-68	14	-	22-19	45	A,C,E,G,J,L,M=Fe - B,D,F,H,K,P,N=Con
22-69	14	-	22-19	45	A,C,E,G,J,L,M=Cu - B,D,F,H,K,P,N=Con
22-71	19	-	22-14	-	V=Al - U=Ch - Bal=Cu
22-72	4	2	20-5	-	B=Al - E=Ch - Bal=Cu
22-73	4	2	20-5	-	E=Al - B=Ch - Bal=Cu
22-74	-	8	22-23	-	A,C,E,G=Fe - B,D,F,H=Con
22-75	-	8	22-23	-	A=Al - B,D,G,H=Cu - C=Ch - E=Fe - F=Con
22-77	14	-	22-19	-	B,D,F,H,J,K,M,P=Cu - A,E,L=Fe - C,G,N=Con
22-78	19	-	22-14	-	A,C,E,G,H,K,M,P,R,T=Con - Bal=Cu
22-79	4	-	22-10	-	A,C=Con - B,D=Cu
22-81	2	3	22-34	-	E=Fe - D=Con - Bal=Cu
22-820	19	-	22-14	-	A,L,C,E,G,J=Fe - B,M,D,F,H,K=Con - N,U,P,R,S,T=Cu - V=Dummy
22-83	19	-	22-14	-	A,L,C,E,G,J=Al - B,M,D,F,H,K=Ch - N,U,P,R,S,T=Cu - V=Dummy
22-85	4	2	22-5	-	n°2=Al - n°2=Ch - Bal=Cu

Materials description key: AL = Alumel, Ch = Chromel, Con = Constantan, Cu = Copper, Fe = Iron, PhBz = Phosphor Bronze. Dummy = Wire hole Plug

Degrees α ±2°

© 2015 Glenair, Inc. U.S. CAGE Code 06324 Printed in Italy

Downloaded from Arrow.com.

Glenair Series ITS and ITS-RG
MIL-DTL-5015 Type Reverse Bayonet Connectors
Insert Arrangement for Thermocouple Contacts

Arrangement	Number of contacts		Standard Insert	Alternate Position Rotation	Contact Material
	#16	#12			
24-412	12	-	24-19	-	n°6=Cu - n°6=Con
24-56	9	2	24-20	45	E=Al - F=Ch - Bal=Cu
24-57	24	-	24-28	45	A,C,J,V,Y,W,K,E,H,U,S,M=Ch - Bal=Al
24-62	24	-	24-28	-	A,C,E,G=Fe - B,D,F,H=Con - R,T=Ch - S,U=Al - Bal=Cu
24-621	24	-	24-28	-	A,C,E,G,J,L,K,N,S,U,W ,Y=Fe - B,D,F,H,Q,R,M,P,T,V,X,Z=Con
24-622	24	-	24-28	-	A,C,E,G,J,L,K,N,S,U,W ,Y=Ch - B,D,F,H,Q,R,M,P,T,V,X,Z=Al
24-63	24	-	24-28	-	A,C,E,G,J,L,K,N,S,U,W ,Y=Cu - B,D,F,H,Q,R,M,P,T,V,X,Z=Con
24-64	16	-	24-5	-	A,B,C,D,E,F,G,H=Fe - J,K,L,M,N,P,R,S=Con
24-68	24	-	24-28	-	D=Con - Bal=Cu
24-69	12	-	24-19	-	n°5=Con - n°7=Cu
24-71	16	-	24-5	-	A,B,C,D,E,F,G,H=Al - J,K,L,M,N,P,R,S=Ch
28-201	4	10	28-20	-	A,C,E,G,J,P=Con - Bal=Cu
28-53	18	4	28-11	45	J,L=Al - K,M=Ch
28-58	4	10	28-20	45	A,C,E,G,K,M=Al - B,D,F,H,L,N=Ch - J,P=Cu
28-61	37	-	28-21	45	A,C,Z,m,r,n,a,K,F,H,X,k,h,T,M,N,d=Fe - Bal=Con
28-63	4	10	28-20	315	A,C,E,G,J=Al - B,D,F,H,P=Ch - Bal=Cu
28-64	35	-	28-15	-	A,d=Al - B,j=Ch - C,D,E,F,G,N,P,R,S,H,J,K,L,M,W,X,Y,Z=Con - Bal=Cu
28-65	26	-	28-12	-	A,C,E,G,J,L,N,R,T,V=Fe - X,Z=Al - B,D,F,H,K,M,P,S,U,W =Con - Y,a=Ch - b,d=Cu
28-66	20	-	28-16	-	n°10=Con - n°10=Cu
28-67	20	-	28-16	-	U=Con - Bal=Cu
28-68	35	-	28-15	45	T=Al - U=Ch - Bal=Cu
28-69	18	4	28-11	-	G=Al - R=Ch - Bal=Cu
28-700	18	4	28-11	-	A=Al - B=Ch - Bal=Cu
28-77	20	-	28-16	-	n°6=Fe - n°6=Con - Bal=Cu
28-78	35	-	28-15	-	A,B=Ch - C,D=Al - Bal=Cu
28-80	20	-	28-16	-	n°10=Fe - n°10=Con
28-81	35	-	28-15	-	n°10=Al - n°10=Ch - Bal=Cu
28-811	35	-	28-15	-	n°17=Ch - n°17=Al - n°1=Dummy
28-82	35	-	28-15	-	n°12=Fe - n°12=Con - Bal=Cu
32-50	34	6	32-8	-	M=Ch - N=Al - Bal=Cu
32-51	24	6	32-8	90	M=Ch - N=Al - Bal=Cu
32-55	24	6	32-8	125	M,N=Ch - O,P=Al - Bal=Cu
32A-401	40	-	32A-40	-	n°13=Al - n°13=Ch - n°14=Cu
36-101	48	-	36-10	-	n°24=Al - n°24=Ch
36-102	48	-	36-10	-	n°24=Ch - n°24=Con
36-53	40	7	36-7	45	U,V,W =Al - X,Y,Z=Ch - Bal=Cu
36-56	48	-	36-10	-	A,C,E,G,L,J,H,P,R,T,V,X,Z,b,d,f,h,k,q,m,n,u,w,y=Con - Bal=Cu
36-57	46	1	36-8	-	W =Al - f=Ch - Bal=Cu
36-58	35	-	36-15	-	H=Al - G=Ch - Bal=Cu
36-61	35	-	36-15	-	A,C,E,J,K,L,M,N,P,R,T,V,f,X,Y,h,j,c=Con - Bal=Cu
36-62	48	-	36-10	-	A,C,E=Al - B,D,F=Ch - Bal=Cu
36-63	48	-	36-10	-	n°16=Al - n°16=Ch - n°16=Cu
36-64	48	-	36-10	-	n°24=Fe - n°24=Con
40-58	85	-	40-56	-	A,C,E,H,K,M,P,S,U,W,Y,a,c,f,h,j,m,p,r,t,v,x,z,AB,AD,AF,AJ,AL,AN,AP,AS,AU,AW,AY,BA,BC,BE,BH,BK,BM,BP,BS,BU=Fe - Bal=Con
40-59	85	-	40-56	-	B=Ch - C=Con - Bal=Cu

Materials description key: AL = Alumel, Ch = Chromel, Con = Constantan, Cu = Copper, Fe = Iron, PhBz = Phosphor Bronze. Dummy = Wire hole Plug

Degrees α ±2°

© 2015 Glenair, Inc. U.S. CAGE Code 06324 Printed in Italy

Downloaded from Arrow.com.

Glenair Series ITS
MIL-DTL-5015 Type Reverse Bayonet Connectors
Panel Cut-Out Mounting Data

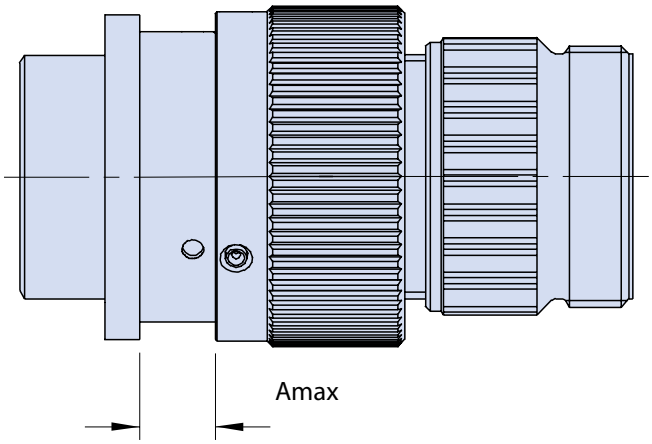

MAXIMUM PANEL THICKNESS

Panel thickness for type 00. 02 connectors used for rear mounting											
Shell size	**10SL**	**14S**	**16S 16**	**18**	**20**	**22**	**24**	**28**	**32**	**36**	**40**
A	3.7	3.7	3.7	3.7	3.7	3.7	5.25	5.25	6.1	6.1	6
Panel thickness for type 02PP. 03. 030 and 038 connectors (with threads holes)											
Shell size	**10SL**	**14S**	**16S 16**	**18**	**20**	**22**	**24**	**28**	**32**	**36**	**40**
A	7.2	7.2	7.2	7.5	7.5	7.5	7.5	7.5	7.5	7.5	7.5
Panel thickness for type 02PP. 03. 030 and 038 connectors. To be used for plugs with covered coupling nuts											
Shell size	**10SL**	**14S**	**16S 16**	**18**	**20**	**22**	**24**	**28**	**32**	**36**	**40**
A	2.5	2.5	2.5	3.2	3.2	3.2	3.2	3.2	3.2	3.2	3.2

© 2015 Glenair, Inc. U.S. CAGE Code 06324 Printed in Italy

Downloaded from Arrow.com.

Glenair Series ITS
MIL-DTL-5015 Type Reverse Bayonet Connectors
Panel Cut-Out Mounting Data

PANEL CUTOUT

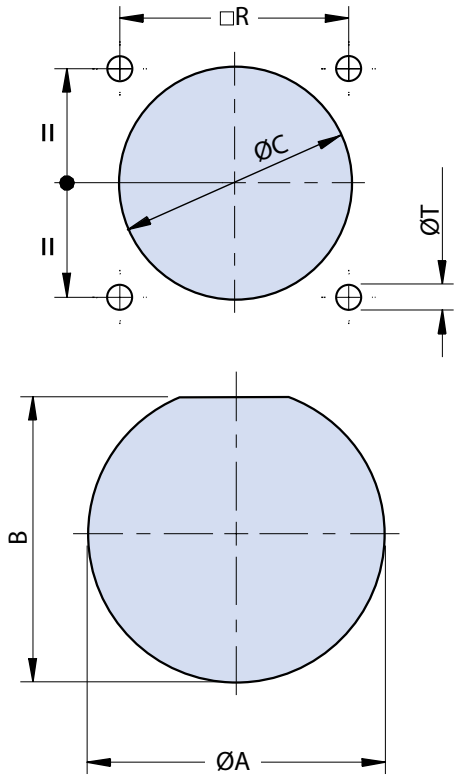

Panel Mounting Recommended Torque (Threaded Holes Receptacle)[Nm]			
Screw size	Shell Material		
	Aluminum	Marine Bronze	Stainless Steel
M4	1,1	1,6	2
M5	2,1	2,9	3,7

Jam Nut Tightening Torque for type 07, 070, 078	
Shell size	**Torque [Nm]**
10SL	18
14S	28
16S-16	30
18-20	35
22	40
24-28	45
32	50
36	55
40	60

Panel cutout for type 00, 02, 02PP, 26 connectors (front panel mounting)											
Shell size	**10SL**	**14S**	**16S 16**	**18**	**20**	**22**	**24**	**28**	**32**	**36**	**40**
ØC	17	20	23	26.5	30	33	36	42	48.50	55	61
R ±0.1	18.2	23.0	24.6	27	29.4	31.8	34.9	39.7	44.5	49.2	55.5
ØT	3.4	3.4	3.4	3.4	3.4	3.4	3.9	3.9	4.5	4.5	4.5
Panel cutout for type 03, 030, 038 connectors (rear panel mounting)											
Shell size	**10SL**	**14S**	**16S 16**	**18**	**20**	**22**	**24**	**28**	**32**	**36**	**40**
ØC	19.1	25.5	28.3	31.7	35	38.3	41.8	47.6	54.3	60.5	66.4
R ±0.1	18.2	23.0	24.6	27	29.4	31.8	34.9	39.7	44.5	49.2	55.5
ØT	4.5	4.5	4.5	4.5	4.5	4.5	4.5	5.5	5.5	5.5	5.5
Panel cutout for type 07, 070, 078 connectors (jam nut receptacles)											
Shell size	**10SL**	**14S**	**16S 16**	**18**	**20**	**22**	**24**	**28**	**32**	**36**	**40**
ØA + 0.25	22.40	28.75	31.95	35.10	38.30	41.45	44.65	51.00	57.35	63.70	70.05
ØB -0.35	21.00	27.40	30.95	33.75	36.85	40.05	43.350	49.55	55.95	62.35	68.55

© 2015 Glenair, Inc. U.S. CAGE Code 06324 Printed in Italy

Downloaded from Arrow.com.

Glenair Series ITS
MIL-DTL-5015 Type Reverse Bayonet Connectors
How to Order - Part Number Breakdown

Elastomer Option
Omit for Polychloroprene
FR - Fire Resistant Elastomer
S - Silicone Elastomer

Connector/Backshell Class
A - Non-Environmental
G, GR, SP - Environmental (includes Wire Sealing Grommet)
GS - Environmental (includes Wire Sealing Grommet and Grommet for Heat Shrink Tubing)
FV, F, R, RS - Environmental (includes Wire Sealing Grommet and Compression Ring)

Plug Grounding Fingers
Only for Plug

Contact Gender
P - Pin
S - Socket

Contact Options
B0 - No Contacts (Crimp Contacts Only)
B1 - Gold Plated Contacts
OMIT - Silver Plated Contacts

Mod. Code See A-39 for Plating Options

XX	ITS	G	31	00	A	20-27	P	Y	XX	N0	XXX

ITS: *Bayonet Coupling*
ITB: *Marine Bronze or Stainless Steel Shell without Stainless Steel Studs*
**see diagram*

Contact Type
31 - Solder
41 - Crimp

Shell Size and Insert Arrangement

Alternate Insert Rotation
Omit for Standard

Accessory Description Code

CONNECTOR SHELL STYLES

00 - Front Panel Mount Square Flange Receptacle with Accessory Threads
01 - In-Line Cylindrical Receptacle with Accessory Threads
02 - Front Panel Mount Square Flange Receptacle—No Accessory Threads
03 - Rear Panel Mount Square Flange Receptacle—No Accessory Threads
030 - Rear Panel Mount Square Flange Receptacle with Accessory Threads
038 - Rear Panel Mount Square Flange Receptacle with 90° Backshell
05 - Dummy Receptacle
06 - Straight Cylindrical Plug Connector with Accessory Threads
07 - Rear Panel Mount Jam Nut Receptacle—No Accessory Threads
070 - Rear Panel Mount Jam Nut Receptacle with Accessory Threads
078 - Rear Panel Mount Jam Nut Receptacle with 90° Backshell
08 - Cylindrical Plug Connector with 90° Backshell
26 - Square Flange Panel Mount Plug

*** ITS / ITB Diagram:**

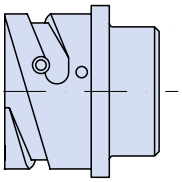

ITS Type

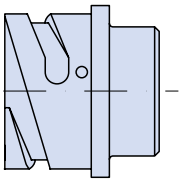

ITB Type

© 2015 Glenair, Inc. U.S. CAGE Code 06324 Printed in Italy

Downloaded from Arrow.com.

Glenair Series ITS
MIL-DTL-5015 Type Reverse Bayonet Connectors
Contact Rating, Materials and Finishes

MATERIALS AND FINISHES		
COMPONENT	**MATERIAL**	**FINISH**
Contacts	Copper Alloy	Silver Plated (Standard) Gold Plated (B1)
Shells, Coupling Nuts, Backshells	Aluminum Alloy (Standard) Stainless Steel (Option) Marine Bronze (Option)	See How To Order Passivate Unplated
Inserts	Polychloroprene (Standard) -55°C +125°C Ethylene Acrylic Elastomer (FRITS) -40°C +175°C Silicone Elastomer (SITS) -55°C +200°C	None
Grommets	Polychloroprene (Standard) Fire Resistant Silicone (FRITS) Silicone Elastomer (SITS)	None
Grounding Fingers	Berillium Copper	Silver Plated
Elastomeric Sealing Rings	Nitrile Rubber, Polychloroprene, Silicone	None

STANDARD PLATING PERFORMANCE							
Property	**RoHS**					**Not RoHS**	
	Alum/Black	**Alum/Black Zn-Ni**	**Alum/Electroless Nickel**	**Marine Bronze/ Unplated**	**SST/Passivate**	**Alum/ Olive Drab Zn-Ni**	**Alum/Cadmium Olive Drab**
	F6	**F7**	**F11**	**MB**	**FK**	**F8**	**G3**
Temperature Range	-55°C + 125°C	-55°C + 175°C	-55°C + 125°C	-55°C + 200°C	-55°C + 200°C	-55°C + 175°C	-55°C + 125°C
Salt Spray Hours	500	500	48	1000	48	500	500
Electical Conductivity	NO	Very Good	Very Good	Very Good	Fair	Very Good	Very Good

© 2015 Glenair, Inc.

Downloaded from Arrow.com.

SERIES 921

SUPER ITS™

High-performance reverse-bayonet power and signal connectors for harsh application environments

Glenair is one of the world's most experienced manufacturers of reverse-bayonet, 5015 type power and signal connectors. Our ITS series connectors have been used in thousands of industrial, rail, and military applications. Now Glenair has taken this proven reverse-bayonet coupling technology and combined it with next-generation materials and design to create the ultimate high-performance power and signal cylindrical connector. The Series 921 Super ITS™ features vastly improved mechanical, environmental and electrical performance compared to standard-duty 5015 type industrial connectors. From its high-ampacity LouverBand contacts to its high-temperature PTFE inserts, the Super ITS™ is the ultimate power distribution and signal transmission connector for harsh environments.

Glenair®

Glenair Italia S.p.A.
Via del Lavoro, 7.
40057 - Quarto Inferiore
91201-2497
Granarolo dell'Emilia - Italy
Tel. +39 051 782811
Fax +39 051 782259
info@glenair.it
www.glenair.it

Downloaded from Arrow.com.

Glenair Series ITS Reverse Bayonet Power and Signal Connectors (5015 Type)

PRODUCT FEATURES

- **Fast, Easy Bayonet Coupling: 1/4 Turn**
- **Environmental and Non-Environmental Versions**
- **All Shell Styles: Plug, Square Flange, Jam-Nut, etc.**
- **High Shock and Vibration Resistance**
- **Contact Sizes from #20 to #4/0 in more than 200 Insert Arrangements**
- **Audible and Visual Coupling Indicators**
- **Keyed Polarization**
- **Solder, Crimp, PCB and Thermocouple Terminations**

The Ideal Connector Solution for Industrial, Rail/Mass Transit, Agricultural Machinery and Military Vehicles

Harsh Application Environments

The Glenair Series ITS Reverse Bayonet Power and Signal Connector is ideally suited for all inter-car, under-car, trainline and other rugged application connections. Qualified to VG 95234, the reverse bayonet coupling provides easier and faster coupling, especially when the connector is situated in an awkward or hard to reach location. The connector's high resistance to vibration and shock provides reliable mating in even the most rigorous application environments. Environmental protection up to IP67 levels provides additional reliability.

Broad Range of Materials

The Glenair Series ITS Connector is fabricated in aluminum with optional stainless steel or marine-bronze shell materials. All standard plating and surface finishes are supported, including conductive, cadmium free designs. Contacts are available in both silver and gold plating. Sealing members are made from resilient neoprene rubber. Standard insert material is synthetic rubber.

Intermateability

The Glenair Series ITS Connector is a reverse bayonet coupling version of the familiar threaded coupling MIL-DTL-5015. Insert arrangements mimic the 5015 family of configurations, including supported contact sizes, types and arrangements. The Series ITS Connector is interchangeable and intermateable with the wide range of industry-standard reverse bayonet connectors designed around MIL-DTL-5015 and/or qualified to VG 95234.

© 2015 Glenair, Inc. U.S. CAGE Code 06324 Printed in Italy

Downloaded from Arrow.com.

ITS 3100 A N0 and ITS 4100 A N0
Front Panel Mount Square Flange Receptacle
with Accessory Mounting Threads

XX	ITS	31	00	A	20-27	P	Y	XX	N0	XXX
Elastomer Option (See Table III)	Reverse Bayonet Coupling *ITS* - Alumium Shell with Stainless Steel Studs *ITB* -Marine Bronze or Stainless Steel Shell without Stainless Steel Studs For further details, see diagram on page A-38	Contact Type *31* - Solder *41* - Crimp	*00* - Front Wall Mount	Connector Class *A* - General Duty *R* - Sealed Insulator	Shell Size and Insert Arrangement (See Section A)	Contact Gender *P* - Pin *S* - Socket	Alternate Insert Rotation (W, X, Y, Z) Omit for Normal (See Section A)	Contact Options (See Table IV)	*NO* - No Backshell *NOG* - Supplied with Grommet and Compression Ring, No Backshell	Mod Code Option (See Table II)

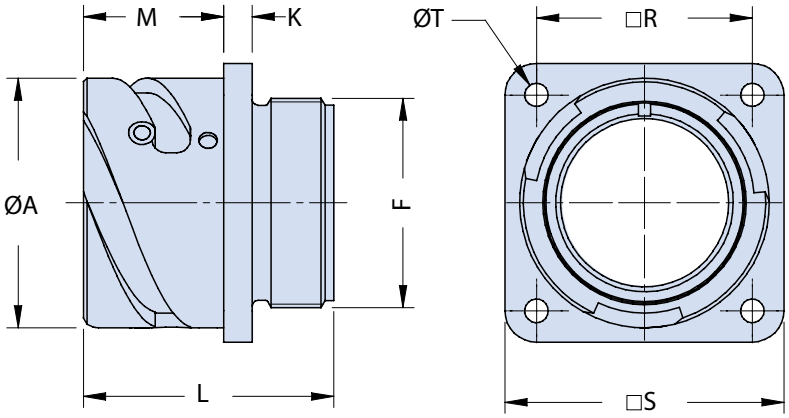

Application Notes

1. Front panel mount square flange receptacle assembly with rear threads for attachment of various backend connector accessories. Through mounting holes.
2. Connector Class "A" (general duty). Connector Class "R" (environmental): sealed insulator only with solder contacts.
3. Standard materials configuration consists of aluminum alloy. For platings, see TABLE II finish options.
4. Standard contact material consists of copper alloy with silver plating or gold plating.
5. A broad range of other front and rear connector accessories are available.
   See our website and/or contact the factory for complete information.

© 2015 Glenair, Inc. U.S. CAGE Code 06324 Printed in Italy

Downloaded from Arrow.com.

ITS 3100 A N0 and ITS 4100 A N0
Front Panel Mount Square Flange Receptacle
with Accessory Mounting Threads

Glenair®

TABLE I: DIMENSIONS

Shell Size	ØA +0.2 -0.1	K ±0.2	L Max.	M +0.4 -0	R ±0.2	S ±0.2	ØT +0.1 -0	F Thread
10 SL	18.2	2.8	24.7	14.2	18.25	25.4	3.2	0.6250 - 24UNEF
14 S	24.5	3.2	24.9	14.2	23.00	30.4	3.2	0.7500 - 20UNEF
16 S	27.2	3.2	24.9	14.2	24.60	32.5	3.2	0.8750 - 20UNEF
16	27.2	3.2	33.9	19.0	24.60	32.5	3.2	0.8750 - 20UNEF
18	30.7	4.0	34.3	19.0	27.00	35.0	3.2	1.0000 - 20UNEF
20	34.0	4.0	34.3	19.0	29.40	38.0	3.2	1.1250 - 18UNEF
22	37.3	4.0	34.3	19.0	31.75	41.0	3.2	1.2500 - 18UNEF
24	40.9	4.0	35.8	20.6	34.90	44.5	3.7	1.3750 - 18UNEF
28	46.7	4.0	35.8	20.6	39.70	50.9	3.7	1.6250 - 18UNEF
32	53.4	4.0	37.4	22.2	44.50	57.0	4.3	1.8750 - 16UN
36	59.6	4.0	37.4	22.2	49.20	63.5	4.3	2.0625 - 16UNS
40	65.5	4.0	37.4	22.2	55.55	69.9	4.3	2.3125 - 16UNS

TABLE II: MODIFICATION CODES

STANDARD MATERIAL AND FINISH (*)		
Sym	**Description**	**RoHS**
	Omit for Aluminum/ Cadmium Olive Drab	
F6	Aluminum/ Black Electrodeposited Paint	✓
F7	Aluminum/ Black Zinc Nickel	✓
F11	Aluminum/ Electroless Nickel	✓
MB	Marine Bronze/ Unplated	✓
FK	Stainless Steel/ Passivate	✓

(*) For further options, please contact the factory.

TABLE III

ELASTOMER OPTIONS	
Sym	**Description**
	Omit for Polychloroprene Elastomer
FR	Fire Resistant Elastomer
S	Silicone Elastomer

TABLE IV: MODIFICATION CODES

CONTACT OPTIONS	
Sym	**Description**
B0	Connector without Contacts**
B1	Connector with Gold Plated Contacts
Omit for standard version (Silver plated)	

(**) Crimp Contacts Only

© 2015 Glenair, Inc. U.S. CAGE Code 06324 Printed in Italy

Downloaded from Arrow.com.

ITS 3100 A and ITS 3100 R
ITS 4100 A and ITS 4100 R
Front Panel Mount Square Flange Receptacle Assembly
with Backshell for the Attachment of Additional Accessories

XX	ITS	31	00	A	20-27	P	Y	XXX

- **XX** — Elastomer Option (See Table III)
- **ITS** — Reverse Bayonet Coupling
  ITS - Alumium Shell with Stainless Steel Studs
  ITB - Marine Bronze or Stainless Steel Shell without Stainless Steel Studs
  For further details, see diagram on page A-38
- **31** — Contact Type
  31 - Solder
  41 - Crimp
- **00** — *00* - Front Wall Mount
- **A** — Connector/Backshell Class
  A - Non-Environmental; Supplied with Backshell Only
  R - Environmental; Supplied with Backshell and Grommet
- **20-27** — Shell Size and Insert Arrangement (See Section A)
- **P** — Contact Gender
  P - Pin
  S - Socket
- **Y** — Alternate Insert Rotation (W, X, Y, Z) Omit for Normal (See Section A)
- **XXX** — Mod Code Option (See Table II)

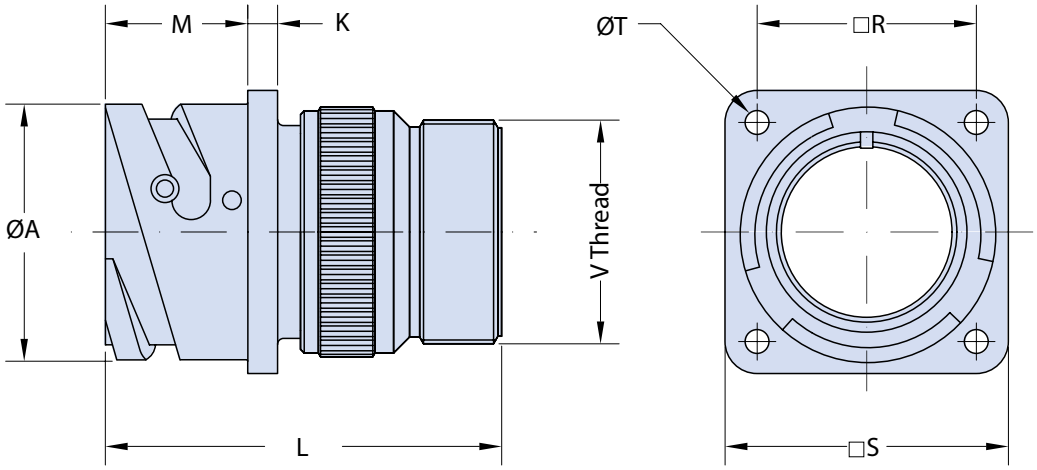

Application Notes

1. Front panel mount square flange receptacle with backshell for the attachment of strain relief cable clamps or other accessories. Through mounting holes.
2. Connector/Backshell Class "A" (non-environmental)—Not supplied with wire sealing grommet; Class "R" (environmental)—Supplied with grommet.
3. Standard materials configuration consists of aluminum alloy. For platings, see TABLE II finish options.
4. Standard contact material consists of copper alloy with silver plating or gold plating.
5. A broad range of other front and rear connector accessories are available. See our website and/or contact the factory for complete information.
6. Order cable clamps separately.

© 2015 Glenair, Inc. U.S. CAGE Code 06324 Printed in Italy

Downloaded from Arrow.com.

ITS 3100 A and ITS 3100 R
ITS 4100 A and ITS 4100 R
Front Panel Mount Square Flange Receptacle Assembly
with Backshell for the Attachment of Additional Accessories

TABLE I: DIMENSIONS

Shell Size	ØA +0.2 -0.1	K ±0.2	L Max.	M +0.4 -0	R ±0.2	S ±0.2	ØT +0.1 -0	V Thread
10 SL	18.2	2.8	44.0	14.2	18.25	25.4	3.2	0.6250 - 24UNEF
14 S	24.5	3.2	46.5	14.2	23.00	30.4	3.2	0.7500 - 20UNEF
16 S	27.2	3.2	46.5	14.2	24.60	32.5	3.2	0.8750 - 20UNEF
16	27.2	3.2	57.0	19.0	24.60	32.5	3.2	0.8750 - 20UNEF
18	30.7	4.0	58.0	19.0	27.00	35.0	3.2	1.0000 - 20UNEF
20	34.0	4.0	58.0	19.0	29.40	38.0	3.2	1.1875 - 18UNEF
22	37.3	4.0	58.5	19.0	31.75	41.0	3.2	1.1875 - 18UNEF
24	40.9	4.0	60.5	20.6	34.90	44.5	3.7	1.4375 - 18UNEF
28	46.7	4.0	66.5	20.6	39.70	50.9	3.7	1.4375 - 18UNEF
32	53.4	4.0	71.5	22.2	44.50	57.0	4.3	1.7500 - 18UNS
36	59.6	4.0	77.0	22.2	49.20	63.5	4.3	2.0000 - 18UNS
40	65.5	4.0	77.0	22.2	55.55	69.9	4.3	2.2500 - 16UN

TABLE II: MODIFICATION CODES

CONTACT OPTIONS		
Sym	**Description**	
B0	Connector without Contacts**	
B1	Connector with Gold Plated Contacts	
Omit for standard version (Silver plated)		
STANDARD MATERIAL AND FINISH (*)		
Sym	**Description**	**RoHS**
	Omit for Aluminum/ Cadmium Olive Drab	
F6	Aluminum/ Black Electrodeposited Paint	✓
F7	Aluminum/ Black Zinc Nickel	✓
F11	Aluminum/ Electroless Nickel	✓
MB	Marine Bronze/ Unplated	✓
FK	Stainless Steel/ Passivate	✓

(*) For further options, please contact the factory.

(**) Crimp Contacts Only

TABLE III

ELASTOMER OPTIONS	
Sym	**Description**
	Omit for Polychloroprene Elastomer
FR	Fire Resistant Elastomer
S	Silicone Elastomer

© 2015 Glenair, Inc.

Downloaded from Arrow.com.

ITS 3100 A BR and ITS 3100 R BR
ITS 4100 A BR and ITS 4100 R BR
Front Panel Mount Square Flange Receptacle Assembly
with Backshell for Termination of UNI4883 Rubber Conduits

Elastomer Option (See Table IV)	Contact Type *31* - Solder *41* - Crimp	Connector/Backshell Class *A* - Non-Environmental; Supplied with Backshell Only *R* - Environmental; Supplied with Backshell and Grommet	Alternate Insert Rotation (W, X, Y, Z) Omit for Normal (See Section A)	UNI4883 Backshell Adapter Shell Size Designator (See Table II)

XX	ITS	31	00	A	20-27	P	Y	XX	BR2722	XXX

Reverse Bayonet Coupling *ITS* - Alumium Shell with Stainless Steel Studs *ITB* - Marine Bronze or Stainless Steel Shell without Stainless Steel Studs For further details, see diagram on page A-38	*00* - Front Wall Mount	Shell Size and Insert Arrangement (See Section A)	Contact Gender *P* - Pin *S* - Socket	Contact Options (See Table V)	Mod Code Option (See Table III)

B

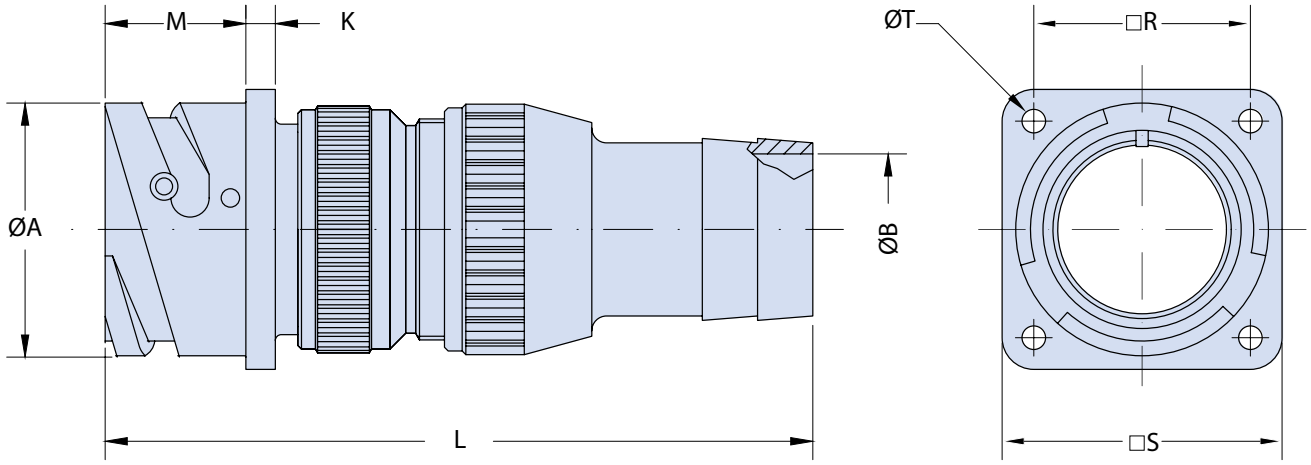

Application Notes

1. Front panel mount square flange receptacle with rear-end backshell for termination of UNI4883 type rubber conduit. Through mounting holes.
2. Connector/Backshell Class "A" (non-environmental)—Not supplied with wire sealing grommet; Class "R" (environmental)—Supplied with grommet.
3. Standard materials configuration consists of aluminum alloy. For platings, see TABLE II finish options.
4. Standard contact material consists of copper alloy with silver plating or gold plating.

© 2015 Glenair, Inc. U.S. CAGE Code 06324 Printed in Italy

Downloaded from Arrow.com.

ITS 3100 A BR and ITS 3100 R BR
ITS 4100 A BR and ITS 4100 R BR
Front Panel Mount Square Flange Receptacle Assembly
with Backshell for Termination of UNI4883 Rubber Conduits

TABLE I: DIMENSIONS

Shell Size	ØA +0.2 -0.1	ØB ±0.1	K ±0.2	L Max.	M +0.4 -0	R ±0.2	S ±0.2	ØT +0.1 -0
10 SL	18.2	See Table III Below	2.8	90.0	14.2	18.25	25.4	3.2
14 S	24.5		3.2	91.5	14.2	23.00	30.4	3.2
16 S	27.2		3.2	91.5	14.2	24.60	32.5	3.2
16	27.2		3.2	103.0	19.0	24.60	32.5	3.2
18	30.7		4.0	103.0	19.0	27.00	35.0	3.2
20	34.0		4.0	103.0	19.0	29.40	38.0	3.2
22	37.3		4.0	103.0	19.0	31.75	41.0	3.2
24	40.9		4.0	104.5	20.6	34.90	44.5	3.7
28	46.7		4.0	111.0	20.6	39.70	50.9	3.7
32	53.4		4.0	116.5	22.2	44.50	57.0	4.3
36	59.6		4.0	122.0	22.2	49.20	63.5	4.3
40	65.5		4.0	122.0	22.2	55.55	69.9	4.3

TABLE II: BACKSHELL DIMENSIONS

Shell Size	Rubber tube in accordance with UNI 4883 to be used by size		ØB ±0.1
	Ø Min	Ø Max	
10 SL	12.0	17.0	10.5
14 S	22.0	27.0	16.5
16-16S	12.0	17.0	10.5
16-16S	15.0	20.0	14.0
18	22.0	27.0	20.5
20 - 22	12.0	17.0	10.5
20 - 22	20.0	25.0	18.5
20 - 22	22.0	27.0	20.5
20 - 22	28.0	33.0	25.0
20 - 22	30.0	35.0	28.5
20 - 22	33.0	38.0	31.5
24 - 28	20.0	25.0	18.5
24 - 28	22.0	27.0	20.5
24 - 28	25.0	30.0	23.5
24 - 28	28.0	33.0	26.5
24 - 28	30.0	35.0	28.5
24 - 28	33.0	38.0	31.5
24 - 28	45.0	50.0	43.5
32	25.0	30.0	23.5
32	28.0	33.0	26.5
32	30.0	35.0	28.5
32	35.0	40.0	31.5
32	40.0	45.0	38.5
32	45.0	50.0	40.0
36	30.0	35.0	28.5
36	35.0	40.0	31.5
36	45.0	50.0	43.5
40	30.0	35.0	28.5
40	35.0	40.0	31.5
40	40.0	45.0	38.5
40	45.0	50.0	43.5
40	50.0	55.0	48.5

TABLE III: MODIFICATION CODES

STANDARD MATERIAL AND FINISH (*)		
Sym	**Description**	**RoHS**
	Omit for Aluminum/ Cadmium Olive Drab	
F6	Aluminum/ Black Electrodeposited Paint	✓
F7	Aluminum/ Black Zinc Nickel	✓
F11	Aluminum/ Electroless Nickel	✓
MB	Marine Bronze/ Unplated	✓
FK	Stainless Steel/ Passivate	✓

(*) For further options, please contact the factory.

TABLE IV

ELASTOMER OPTIONS	
Sym	**Description**
	Omit for Polychloroprene Elastomer
FR	Fire Resistant Elastomer
S	Silicone Elastomer

TABLE V: MODIFICATION CODES

CONTACT OPTIONS	
Sym	**Description**
B0	Connector without Contacts**
B1	Connector with Gold Plated Contacts
Omit for standard version (Silver plated)	

(**) Crimp Contacts Only

© 2015 Glenair, Inc. U.S. CAGE Code 06324 Printed in Italy

Downloaded from Arrow.com.

ITS 3100 A PG and ITS 3100 R PG
ITS 4100 A PG and ITS 4100 R PG
Front Panel Mount Square Flange Receptacle Assembly
with Backshell for Attachment of PG Cable Glands

Elastomer Option (See Table III)	Contact Type	Connector/Backshell Class		Alternate Insert Rotation (W, X, Y, Z) Omit for Normal (See Section A)		Mod Code Option (See Table II)
XX	ITS	31	00	A	20-27	P	Y	XX	PG16	XXX

- **XX** – Elastomer Option (See Table III)
- **ITS** – Reverse Bayonet Coupling
  ITS - Alumium Shell with Stainless Steel Studs
  ITB - Marine Bronze or Stainless Steel Shell without Stainless Steel Studs
  For further details, see diagram on page A-38
- **31** – Contact Type: *31* - Solder; *41* - Crimp
- **00** – *00* - Front Wall Mount
- **A** – Connector/Backshell Class: *A* - Non-Environmental; Supplied with Backshell Only; *R* - Environmental; Supplied with Backshell and Grommet
- **20-27** – Shell Size and Insert Arrangement (See Section A)
- **P** – Contact Gender: *P* - Pin; *S* - Socket
- **Y** – Alternate Insert Rotation (W, X, Y, Z) Omit for Normal (See Section A)
- **XX** – Contact Options (See Table IV)
- **PG16** – PG Thread (See Table I)
- **XXX** – Mod Code Option (See Table II)

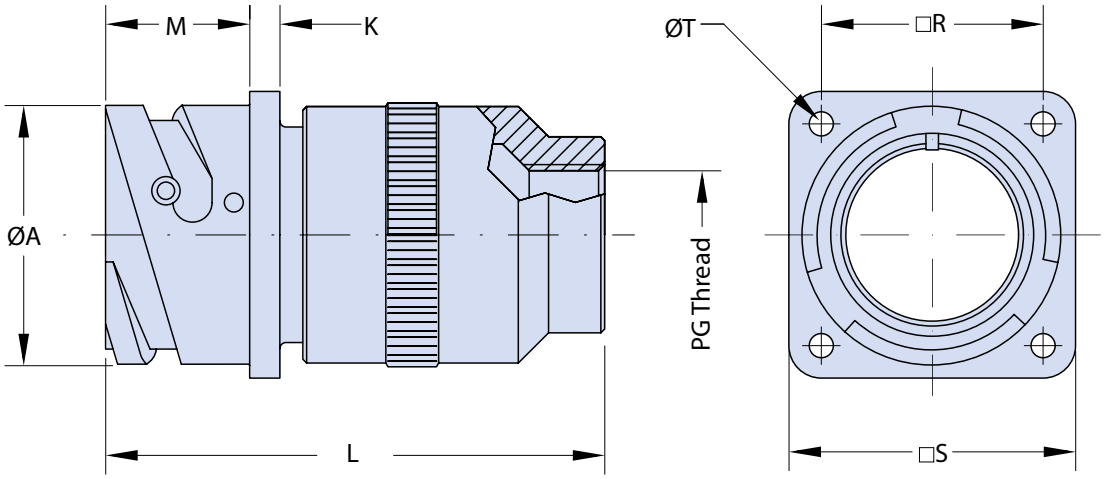

Application Notes

1. Front panel mount square flange receptacle assembly with backshell for attachment of PG cable glands (not included). Through mounting holes.
2. Connector/Backshell Class "A" (non-environmental) - Not supplied with wire sealing grommet
   Class "R" (environmental) - Supplied with grommet.
3. Standard materials confinguration consists of aluminium alloy. For plating, see TABLE II finish options.
4. Standard contact material consists of copper alloy with silver plating or gold plating.
5. Other types of front and rear connector accessories are available.
   See our website and/or contact the factory for complete information.

© 2015 Glenair, Inc. U.S. CAGE Code 06324 Printed in Italy

Downloaded from Arrow.com.

ITS 3100 A PG and ITS 3100 R PG
ITS 4100 A PG and ITS 4100 R PG
Front Panel Mount Square Flange Receptacle Assembly
with Backshell for Attachment of PG Cable Glands

TABLE I: DIMENSIONS

Shell Size	ØA +0.2 -0.1	K ±0.2	L Max.	M +0.4 -0	PG Thread Other PG Threads available on request	R ±0.2	S ±0.2	ØT +0.1 -0
10 SL	18.2	2.8	52.0	14.2	7 / 9 / 11	18.25	25.4	3.2
14 S	24.5	3.2	54.5	14.2	9/ 11 / 13.5	23.00	30.4	3.2
16 S	27.2	3.2	54.5	14.2	11 / 13.5 / 16	24.60	32.5	3.2
16	27.2	3.2	70.0	19.0	11 / 13.5 / 16	24.60	32.5	3.2
18	30.7	4.0	70.0	19.0	13.5 / 16 / 21	27.00	35.0	3.2
20	34.0	4.0	71.5	19.0	13.5 / 16 / 21	29.40	38.0	3.2
22	37.3	4.0	71.5	19.0	13.5 / 16 / 21	31.75	41.0	3.2
24	40.9	4.0	76.5	20.6	16 / 21/ 29	34.90	44.5	3.7
28	46.7	4.0	76.5	20.6	16 / 21/ 29	39.70	50.9	3.7
32	53.4	4.0	84.0	22.2	16 / 21/ 29	44.50	57.0	4.3
36	59.6	4.0	89.0	22.2	21 / 29 / 36	49.20	63.5	4.3
40	65.5	4.0	94.0	22.2	21 / 29 / 36	55.55	69.9	4.3

TABLE II: MODIFICATION CODES

STANDARD MATERIAL AND FINISH (*)		
Sym	**Description**	**RoHS**
	Omit for Aluminum/ Cadmium Olive Drab	
F6	Aluminum/ Black Electrodeposited Paint	✓
F7	Aluminum/ Black Zinc Nickel	✓
F11	Aluminum/ Electroless Nickel	✓
MB	Marine Bronze/ Unplated	✓
FK	Stainless Steel/ Passivate	✓

TABLE III

ELASTOMER OPTIONS	
Sym	**Description**
	Omit for Polychloroprene Elastomer
FR	Fire Resistant Elastomer
S	Silicone Elastomer

TABLE IV: MODIFICATION CODES

CONTACT OPTIONS	
Sym	**Description**
B0	Connector without Contacts**
B1	Connector with Gold Plated Contacts
Omit for standard version (Silver plated)	

(*) For further options, please contact the factory.

(**) Crimp Contacts Only

© 2015 Glenair, Inc. U.S. CAGE Code 06324 Printed in Italy

Downloaded from Arrow.com.

ITS 3100 A FM and ITS 3100 R FM
ITS 4100 A FM and ITS 4100 R FM
Front Panel Mount Square Flange Receptacle Assembly
with Backshell for use with Metric Cable Glands

Elastomer Option (See Table III)	Contact Type	Connector/Backshell Class		Alternate Insert Rotation (W, X, Y, Z) Omit for Normal (See Section A)				Mod Code Option (See Table II)
	31 - Solder *41* - Crimp	*A* - Non-Environmental; Supplied with Backshell Only *R* - Environmental; Supplied with Backshell and Grommet						
XX	**ITS**	**31**	**00**	**A**	**20-27**	**P**	**Y**	**XX**	**FM25**	**XXX**
	Reverse Bayonet Coupling *ITS* - Alumium Shell with Stainless Steel Studs *ITB* - Marine Bronze or Stainless Steel Shell without Stainless Steel Studs For further details, see diagram on page A-38		*00* - Front Wall Mount		Shell Size and Insert Arrangement (See Section A)	Contact Gender *P* - Pin *S* - Socket		Contact Options (See Table IV)	Metric Thread Size (See Table I)	

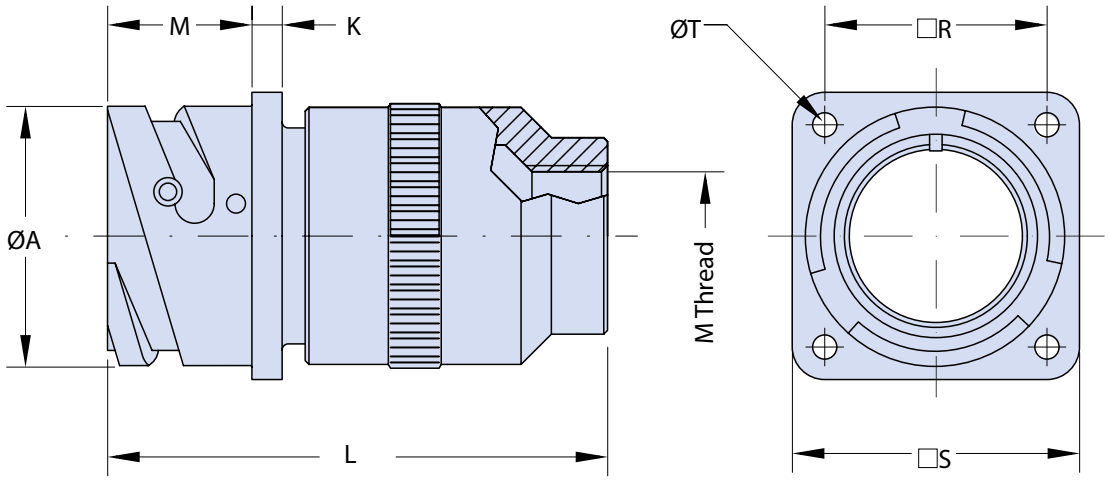

Application Notes

1. Front panel mount square flange receptacle assembly with backshell for use with metric cable glands (not included). Through mounting holes.
2. Connector/Backshell Class "A" (non-environmental)—Not supplied with wire sealing grommet; Class "R" (environmental)—Supplied with grommet.
3. Standard materials configuration consists of aluminum alloy. For platings, see TABLE II finish options.
4. Standard contact material consists of copper alloy with silver plating or gold plating.
5. Metric cable gland not included.

© 2015 Glenair, Inc. U.S. CAGE Code 06324 Printed in Italy

Downloaded from Arrow.com.

ITS 3100 A FM and ITS 3100 R FM
ITS 4100 A FM and ITS 4100 R FM
Front Panel Mount Square Flange Receptacle Assembly
with Backshell for use with Metric Cable Glands

TABLE I: DIMENSIONS

Shell Size	ØA +0.2 -0.1	K ±0.2	L Max.	M +0.4 -0	M Thread Other M Threads available on request	R ±0.2	S ±0.2	ØT +0.1 -0
10 SL	18.2	2.8	52.0	14.2	M 12X1,5	18.25	25.4	3.2
14 S	24.5	3.2	54.5	14.2	M 16X1,5	23.00	30.4	3.2
16 S	27.2	3.2	54.5	14.2	M 16X1,5	24.60	32.5	3.2
16	27.2	3.2	70.0	19.0	M 16X1,5	24.60	32.5	3.2
18	30.7	4.0	71.0	19.0	M 20X1,5	27.00	35.0	3.2
20	34.0	4.0	71.5	19.0	M 25X1,5	29.40	38.0	3.2
22	37.3	4.0	71.5	19.0	M 25X1,5	31.75	41.0	3.2
24	40.9	4.0	71.5	20.6	M 32X1,5	34.90	44.5	3.7
28	46.7	4.0	71.5	20.6	M 32X1,5	39.70	50.9	3.7
32	53.4	4.0	84.0	22.2	M 36X1,5	44.50	57.0	4.3
36	59.6	4.0	109.0	22.2	M 40X1,5	49.20	63.5	4.3
40	65.5	4.0	109.0	22.2	M 40X1,5	55.55	69.9	4.3

TABLE II: MODIFICATION CODES

STANDARD MATERIAL AND FINISH (*)		
Sym	**Description**	**RoHS**
	Omit for Aluminum/ Cadmium Olive Drab	
F6	Aluminum/ Black Electrodeposited Paint	✓
F7	Aluminum/ Black Zinc Nickel	✓
F11	Aluminum/ Electroless Nickel	✓
MB	Marine Bronze/ Unplated	✓
FK	Stainless Steel/ Passivate	✓

TABLE III

ELASTOMER OPTIONS	
Sym	**Description**
	Omit for Polychloroprene Elastomer
FR	Fire Resistant Elastomer
S	Silicone Elastomer

TABLE IV: MODIFICATION CODES

CONTACT OPTIONS	
Sym	**Description**
B0	Connector without Contacts**
B1	Connector with Gold Plated Contacts
Omit for standard version (Silver plated)	

(*) For further options, please contact the factory.

(**) Crimp Contacts Only

© 2015 Glenair, Inc. U.S. CAGE Code 06324 Printed in Italy

Downloaded from Arrow.com.

ITS 3100 A PHM and ITS 3100 R PHM
ITS 4100 A PHM and ITS 4100 R PHM
Front Panel Mount Square Flange Receptacle Assembly
with Environmental PHM Backshell

XX	ITS	31	00	A	20-27	P	Y	XX	PHM11	XXX

- **XX** — Elastomer Option (See Table III)
- **ITS** — Reverse Bayonet Coupling
  ITS - Alumium Shell with Stainless Steel Studs
  ITB - Marine Bronze or Stainless Steel Shell without Stainless Steel Studs
  For further details, see diagram on page A-38
- **31** — Contact Type
  31 - Solder
  41 - Crimp
- **00** — *00* - Front Wall Mount
- **A** — Connector/Backshell Class
  A - Non-Environmental; Supplied with Backshell Only
  R - Environmental; Supplied with Backshell and Grommet
- **20-27** — Shell Size and Insert Arrangement (See Section A)
- **P** — Contact Gender
  P - Pin
  S - Socket
- **Y** — Alternate Insert Rotation (W, X, Y, Z) Omit for Normal (See Section A)
- **XX** — Contact Options (See Table IV)
- **PHM11** — PHM Size (See Table I)
- **XXX** — Mod Code Option (See Table II)

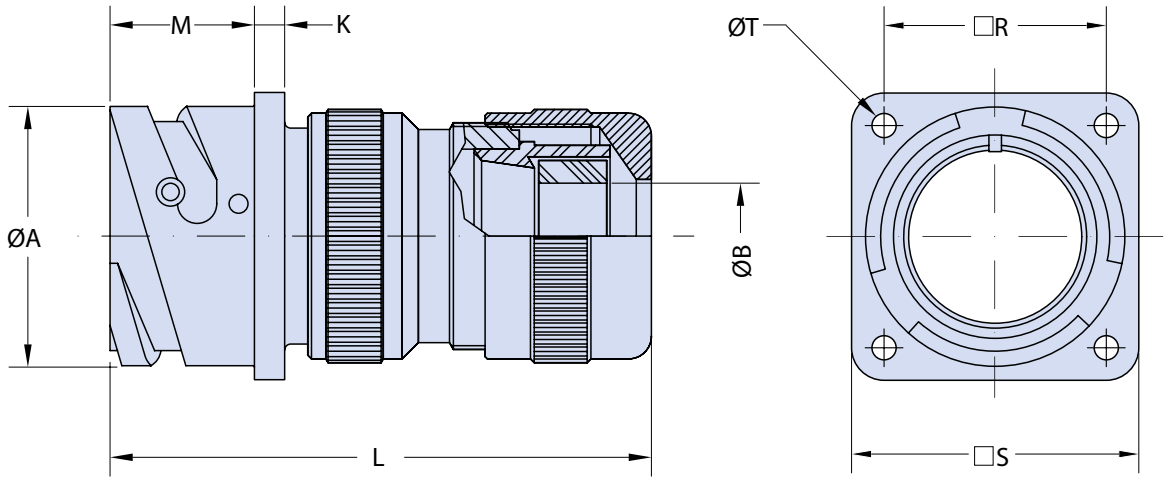

Application Notes

1. Front panel mount square flange receptacle with environmental PHM backshell. Through mounting holes.
2. Connector/Backshell Class "A" (non-environmental)—Not supplied with wire sealing grommet; Class "R" (environmental)—Supplied with grommet.
3. Standard materials configuration consists of aluminum alloy. For platings, see TABLE II finish options.
4. Standard contact material consists of copper alloy with silver plating or gold plating.

© 2015 Glenair, Inc. U.S. CAGE Code 06324 Printed in Italy

Downloaded from Arrow.com.

ITS 3100 A PHM and ITS 3100 R PHM
ITS 4100 A PHM and ITS 4100 R PHM
Front Panel Mount Square Flange Receptacle Assembly
with Environmental PHM Backshell

TABLE I: DIMENSIONS

Shell Size	PHM Size	ØA +0.2 -0.1	ØB Min. - Max.	K ±0.2	L Max.	M +0.4 -0	R ±0.2	S ±0.2	ØT +0.1 -0
10 SL	9	18.2	2 - 9	2.8	64.0	14.2	18.25	25.4	3.2
14 S	11	24.5	2 - 11	3.2	66.5	14.2	23.00	30.4	3.2
16 S	11	27.2	2 - 11	3.2	66.5	14.2	24.60	32.5	3.2
16	11	27.2	2 - 11	3.2	77.0	19.0	24.60	32.5	3.2
18	11 / 18	30.7	2 - 11 / 2 - 16.5	4.0	78.0	19.0	27.00	35.0	3.2
20	11 / 18	34.0	2 - 11 / 2 - 16.5	4.0	78.0	19.0	29.40	38.0	3.2
22	18	37.3	2 - 16.5	4.0	78.5	19.0	31.75	41.0	3.2
24	18 / 22 / 24	40.9	2 - 16.5 / 15 - 20 / 19 - 24	4.0	83.5	20.6	34.90	44.5	3.7
28	18 / 22 / 24	46.7	2 - 16.5 / 15 - 20 / 19 - 24	4.0	89.5	20.6	39.70	50.9	3.7
32	22 / 24	53.4	15 - 20 / 19 - 24	4.0	94.5	22.2	44.50	57.0	4.3
36	35	59.6	23 - 35	4.0	106.0	22.2	49.20	63.5	4.3
40	35	65.5	23 - 35	4.0	106.0	22.2	55.55	69.9	4.3

TABLE II: MODIFICATION CODES

STANDARD MATERIAL AND FINISH (*)		
Sym	**Description**	**RoHS**
	Omit for Aluminum/ Cadmium Olive Drab	
F6	Aluminum/ Black Electrodeposited Paint	✓
F7	Aluminum/ Black Zinc Nickel	✓
F11	Aluminum/ Electroless Nickel	✓
MB	Marine Bronze/ Unplated	✓
FK	Stainless Steel/ Passivate	✓

TABLE III

ELASTOMER OPTIONS	
Sym	**Description**
	Omit for Polychloroprene Elastomer
FR	Fire Resistant Elastomer
S	Silicone Elastomer

TABLE IV: MODIFICATION CODES

CONTACT OPTIONS	
Sym	**Description**
B0	Connector without Contacts**
B1	Connector with Gold Plated Contacts
Omit for standard version (Silver plated)	

(*) For further options, please contact the factory.

(**) Crimp Contacts Only

© 2015 Glenair, Inc. U.S. CAGE Code 06324 Printed in Italy

Downloaded from Arrow.com.

ITS 3100 A PHM-EMI67 and ITS 4100 A PHM-EMI67 Front Panel Mount Square Flange Receptacle Assembly with EMI/RFI PHM Backshell

Elastomer Option (See Table III)	Contact Type *31* - Solder *41* - Crimp	Connector/Backshell Class *A* - Non-Environmental; Supplied with Backshell Only	Alternate Insert Rotation (W, X, Y, Z) Omit for Normal (See Section A)	PHM Size (See Table I)

XX	ITS	31	00	A	20-27	P	Y	XX	PHM18EMI67	XXX

Reverse Bayonet Coupling *ITS* - Alumium Shell with Stainless Steel Studs *ITB* - Marine Bronze or Stainless Steel Shell without Stainless Steel Studs For further details, see diagram on page A-38	*00* - Front Wall Mount	Shell Size and Insert Arrangement (See Section A)	Contact Gender *P* - Pin *S* - Socket	Contact Options (See Table IV)	Mod Code Option (See Table II)

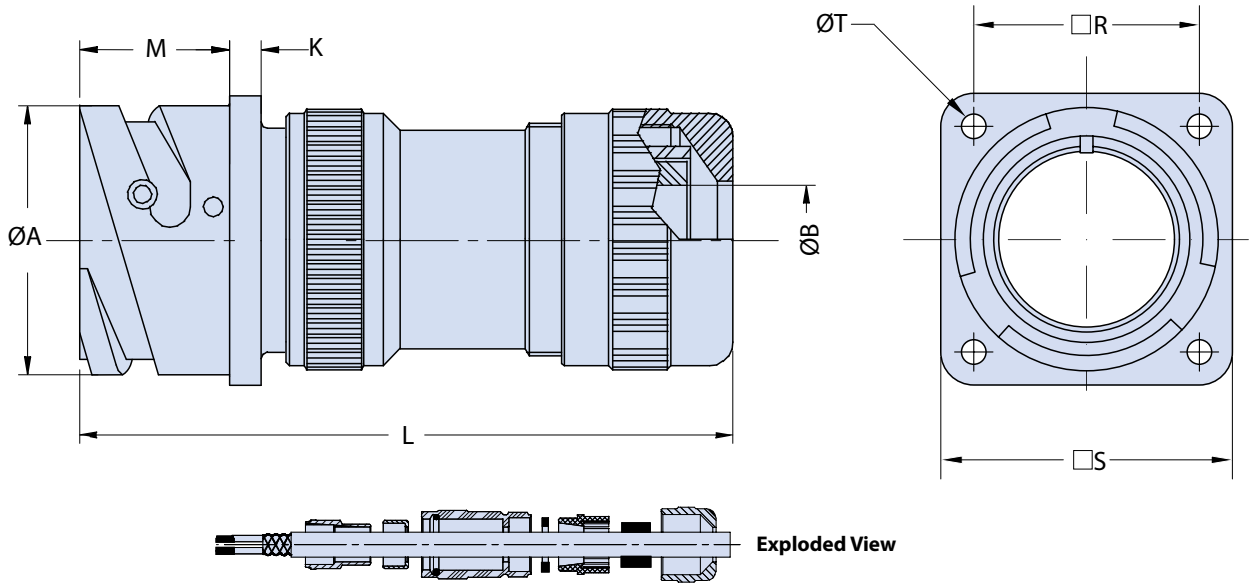

Application Notes

1. Front panel mount square flange receptacle assembly with an EMI/RFI PHM backshell. Through mounting holes.
2. Connector/Backshell Class "A" (non-environmental)—Wire sealing grommet not required.
3. Standard materials configuration consists of aluminum alloy. For platings, see TABLE II finish options.
4. Standard contact material consists of copper alloy with silver plating or gold plating.

© 2015 Glenair, Inc. U.S. CAGE Code 06324 Printed in Italy

Downloaded from Arrow.com.

ITS 3100 A PHM-EMI67 and ITS 4100 A PHM-EMI67
Front Panel Mount Square Flange Receptacle Assembly
with EMI/RFI PHM Backshell

TABLE I: DIMENSIONS

Shell Size	PHM Size	ØA +0.2 -0.1	ØB Min. - Max.	K ±0.2	L Max.	M +0.4 -0	R ±0.2	S ±0.2	ØT +0.1 -0
10 SL	9	18.2	2 - 9	2.8	74.0	14.2	18.25	25.4	3.2
14 S	11	24.5	2 - 11	3.2	88.5	14.2	23.00	30.4	3.2
16 S	11	27.2	2 - 11	3.2	88.5	14.2	24.60	32.5	3.2
16	11	27.2	2 - 11	3.2	98.0	19.0	24.60	32.5	3.2
18	11/18	30.7	2 - 11/ 2 - 16.5	4.0	100.5	19.0	27.00	35.0	3.2
20	11/18	34.0	2 - 11/ 2 - 16.5	4.0	101.0	19.0	29.40	38.0	3.2
22	18	37.3	2 - 16.5	4.0	101.5	19.0	31.75	41.0	3.2
24	18/22	40.9	2 - 16.5 /15 - 20	4.0	104.5	20.6	34.90	44.5	3.7
28	22	46.7	15 - 20	4.0	109.5	20.6	39.70	50.9	3.7
32	24	53.4	19 - 24	4.0	112.0	22.2	44.50	57.0	4.3
36	35	59.6	23 - 35	4.0	118.0	22.2	49.20	63.5	4.3
40	35	65.5	23 - 35	4.0	118.0	22.2	55.55	69.9	4.3

TABLE II: MODIFICATION CODES

STANDARD MATERIAL AND FINISH (*)		
Sym	**Description**	**RoHS**
	Omit for Aluminum/ Cadmium Olive Drab	
F7	Aluminum/ Black Zinc Nickel	✓
F11	Aluminum/ Electroless Nickel	✓
MB	Marine Bronze/ Unplated	✓
FK	Stainless Steel/ Passivate	✓

TABLE III

ELASTOMER OPTIONS	
Sym	**Description**
	Omit for Polychloroprene Elastomer
FR	Fire Resistant Elastomer
S	Silicone Elastomer

TABLE IV: MODIFICATION CODES

CONTACT OPTIONS	
Sym	**Description**
B0	Connector without Contacts**
B1	Connector with Gold Plated Contacts
Omit for standard version (Silver plated)	

(*) For further options, please contact the factory.

(**) Crimp Contacts Only

© 2015 Glenair, Inc. U.S. CAGE Code 06324 Printed in Italy

Downloaded from Arrow.com.

ITS 3100 F and ITS 4100 F
Front Panel Mount Square Flange Receptacle Assembly
with Class A IT3057 Cable Clamp and Polychloroprene Bushing

XX	ITS	31	00	F	20-27	P	Y	XXX

- **XX** – Elastomer Option (See Table III)
- **ITS** – Reverse Bayonet Coupling
  - *ITS* - Alumium Shell with Stainless Steel Studs
  - *ITB* - Marine Bronze or Stainless Steel Shell without Stainless Steel Studs
  - For further details, see diagram on page A-38
- **31** – Contact Type
  - *31* - Solder
  - *41* - Crimp
- **00** – *00* - Front Wall Mount
- **F** – Connector/Backshell Class
  - *F* - Environmental; Supplied with Grommet , Cable Clamp and Polychloroprene Bushing
- **20-27** – Shell Size and Insert Arrangement (See Section A)
- **P** – Contact Gender
  - *P* - Pin
  - *S* - Socket
- **Y** – Alternate Insert Rotation (W, X, Y, Z) Omit for Normal (See Section A)
- **XXX** – Mod Code Option (See Table II)

B

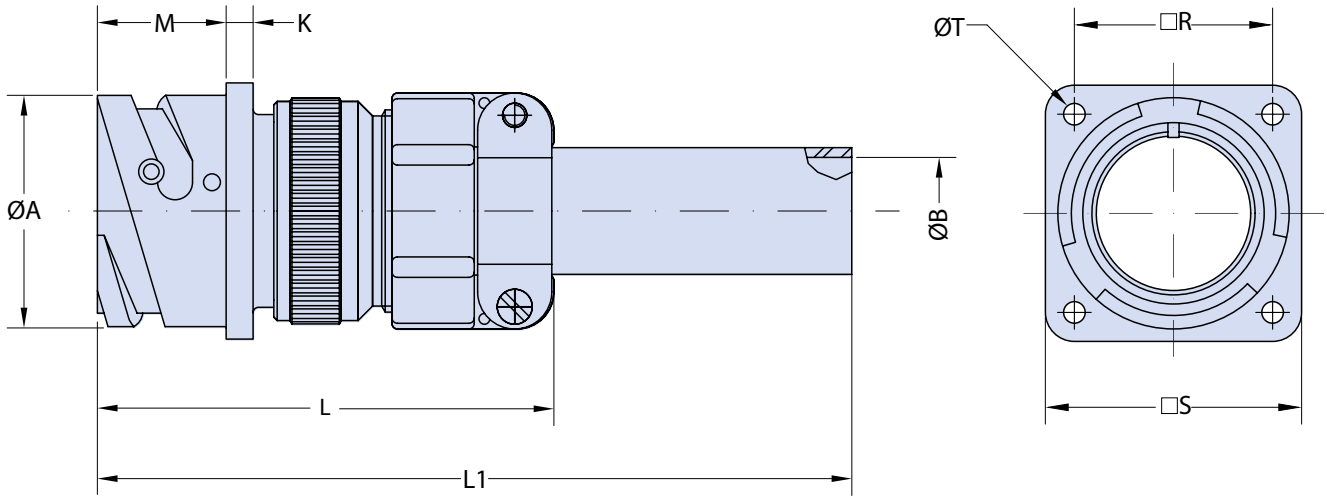

Application Notes

1. Front panel mount square flange receptacle assembly with an insulating grommet, environmental backshell, class A IT3057 cable clamp for use with individual wires and polychloroprene bushing. Through mounting holes.
2. Environmental class "F". Wire sealing grommet supplied.
3. Standard materials configuration consists of aluminum alloy. For platings, see TABLE II finish options.
4. Standard contact material consists of copper alloy with silver plating or gold plating.

© 2015 Glenair, Inc. U.S. CAGE Code 06324 Printed in Italy

Downloaded from Arrow.com.

ITS 3100 F and ITS 4100 F
Front Panel Mount Square Flange Receptacle Assembly
with Class A IT3057 Cable Clamp and Polychloroprene Bushing

TABLE I: DIMENSIONS

Shell Size	ØA +0.2 -0.1	ØB ±0.1	K ±0.2	L Max.	L1 Max.	M +0.4 -0	R ±0.2	S ±0.2	ØT +0.1 -0
10 SL	18.2	5.58	2.8	56.0	114.0	14.2	18.25	25.4	3.2
14 S	24.5	7.92	3.2	60.0	114.0	14.2	23.00	30.4	3.2
16 S	27.2	11.09	3.2	61.5	114.0	14.2	24.60	32.5	3.2
16	27.2	11.09	3.2	72.0	120.5	19.0	24.60	32.5	3.2
18	30.7	14.27	4.0	73.0	120.5	19.0	27.00	35.0	3.2
20	34.0	15.87	4.0	73.0	120.5	19.0	29.40	38.0	3.2
22	37.3	15.87	4.0	73.5	120.5	19.0	31.75	41.0	3.2
24	40.9	19.05	4.0	77.0	120.5	20.6	34.90	44.5	3.7
28	46.7	19.05	4.0	83.0	120.5	20.6	39.70	50.9	3.7
32	53.4	23.79	4.0	88.0	122.5	22.2	44.50	57.0	4.3
36	59.6	31.75	4.0	94.5	124.5	22.2	49.20	63.5	4.3
40	65.5	34.92	4.0	108.5	124.5	22.2	55.55	69.9	4.3

TABLE II: MODIFICATION CODES

CONTACT OPTIONS		
Sym	**Description**	
B0	Connector without Contacts**	
B1	Connector with Gold Plated Contacts	
Omit for standard version (Silver plated)		
STANDARD MATERIAL AND FINISH (*)		
Sym	**Description**	**RoHS**
	Omit for Aluminum/ Cadmium Olive Drab	
F6	Aluminum/ Black Electrodeposited Paint	✓
F7	Aluminum/ Black Zinc Nickel	✓
F11	Aluminum/ Electroless Nickel	✓

(*) For further options, please contact the factory.

(**) Crimp Contacts Only

TABLE III

ELASTOMER OPTIONS	
Sym	**Description**
	Omit for Polychloroprene Elastomer
FR	Fire Resistant Elastomer
S	Silicone Elastomer

© 2015 Glenair, Inc. U.S. CAGE Code 06324 Printed in Italy

Downloaded from Arrow.com.

ITS 3100 A N5 and ITS 3100 R N5
ITS 4100 A N5 and ITS 4100 R N5
Front Panel Mount Square Flange Receptacle Assembly
with Class C (Environmental) IT3057 Cable Clamp

XX	ITS	31	00	A	20-27	P	Y	XX	N5	XXX
Elastomer Option (See Table III)	Reverse Bayonet Coupling *ITS* - Alumium Shell with Stainless Steel Studs *ITB* - Marine Bronze or Stainless Steel Shell without Stainless Steel Studs For further details, see diagram on page A-38	Contact Type *31* - Solder *41* - Crimp	*00* - Front Wall Mount	Connector/Backshell Class *A* - Non-Environmental; Supplied with Backshell Only *R* - Environmental; Supplied with Backshell and Grommet	Shell Size and Insert Arrangement (See Section A)	Contact Gender *P* - Pin *S* - Socket	Alternate Insert Rotation (W, X, Y, Z) Omit for Normal (See Section A)	Contact Options (See Table IV)	Class "C" Environmental Cable Clamp	Mod Code Option (See Table II)

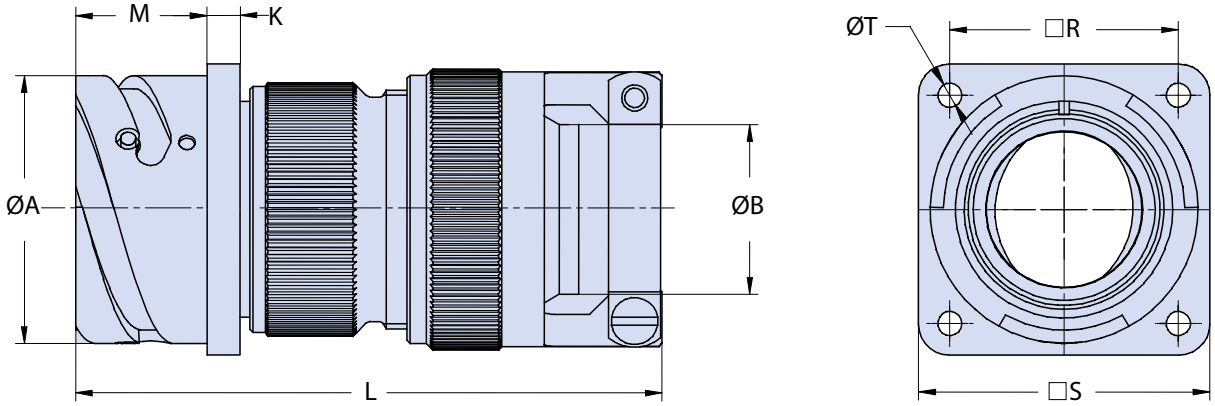

Application Notes

1. Front panel mount square flange receptacle assembly with a class C (environmental) IT3057 cable clamp for use with jacketed cable. Through mounting holes.
2. Connector/Backshell Class "A" (non-environmental)—Not supplied with wire sealing grommet; Class "R" (environmental)—Supplied with grommet.
3. Standard materials configuration consists of aluminum alloy. For platings, see TABLE II finish options.
4. Standard contact material consists of copper alloy with silver plating or gold plating.

© 2015 Glenair, Inc. U.S. CAGE Code 06324 Printed in Italy

Downloaded from Arrow.com.

ITS 3100 A N5 and ITS 3100 R N5
ITS 4100 A N5 and ITS 4100 R N5
Front Panel Mount Square Flange Receptacle Assembly
with Class C (Environmental) IT3057 Cable Clamp

TABLE I: DIMENSIONS

Shell Size	ØA +0.2 -0.1	ØB		K ±0.2	L Max.	M +0.4 -0	R ±0.2	S ±0.2	ØT +0.1 -0
		Open	Closed						
10 SL	18.2	7.93	2.38	2.8	73.0	14.2	18.25	25.4	3.2
14 S	24.5	11.12	5.84	3.2	76.0	14.2	23.00	30.4	3.2
16 S	27.2	13.48	8.00	3.2	73.0	14.2	24.60	32.5	3.2
16	27.2	13.48	8.00	3.2	84.0	19.0	24.60	32.5	3.2
18	30.7	15.87	9.60	4.0	88.0	19.0	27.00	35.0	3.2
20	34.0	19.00	11.30	4.0	90.0	19.0	29.40	38.0	3.2
22	37.3	19.00	11.30	4.0	89.0	19.0	31.75	41.0	3.2
24	40.9	23.80	15.50	4.0	95.0	20.6	34.90	44.5	3.7
28	46.7	23.80	15.50	4.0	103.0	20.6	39.70	50.9	3.7
32	53.4	31.75	23.40	4.0	111.0	22.2	44.50	57.0	4.3
36	59.6	35.00	23.40	4.0	123.0	22.2	49.20	63.5	4.3
40	65.5	41.25	29.90	4.0	123.0	22.2	55.55	69.9	4.3

TABLE II: MODIFICATION CODES

STANDARD MATERIAL AND FINISH (*)		
Sym	**Description**	**RoHS**
	Omit for Aluminum/ Cadmium Olive Drab	
F6	Aluminum/ Black Electrodeposited Paint	✓
F7	Aluminum/ Black Zinc Nickel	✓
F11	Aluminum/ Electroless Nickel	✓
MB	Marine Bronze/ Unplated	✓
FK	Stainless Steel/ Passivate	✓

TABLE III

ELASTOMER OPTIONS	
Sym	**Description**
	Omit for Polychloroprene Elastomer
FR	Fire Resistant Elastomer
S	Silicone Elastomer

TABLE IV: MODIFICATION CODES

CONTACT OPTIONS	
Sym	**Description**
B0	Connector without Contacts**
B1	Connector with Gold Plated Contacts
Omit for standard version (Silver plated)	

(*) For further options, please contact the factory.

(**) Crimp Contacts Only

© 2015 Glenair, Inc. U.S. CAGE Code 06324 Printed in Italy

Downloaded from Arrow.com.

ITS 3100 G and ITS 4100 G
Front Panel Mount Square Flange Receptacle Assembly
with Environmental Backshell for Heat Shrink Tubing

XX	ITS	31	00	G	20-27	P	Y	XXX

- **XX** — Elastomer Option (See Table III)
- **ITS** — Reverse Bayonet Coupling
  - *ITS* - Alumium Shell with Stainless Steel Studs
  - *ITB* - Marine Bronze or Stainless Steel Shell without Stainless Steel Studs
  - For further details, see diagram on page A-38
- **31** — Contact Type
  - *31* - Solder
  - *41* - Crimp
- **00** — *00* - Front Wall Mount
- **G** — Connector/Backshell Class
  - *G* - Environmental; Supplied with Gromme and Backshell for Heat Shrink Tubing
- **20-27** — Shell Size and Insert Arrangement (See Section A)
- **P** — Contact Gender
  - *P* - Pin
  - *S* - Socket
- **Y** — Alternate Insert Rotation (W, X, Y, Z) Omit for Normal (See Section A)
- **XXX** — Mod Code Option (See Table II)

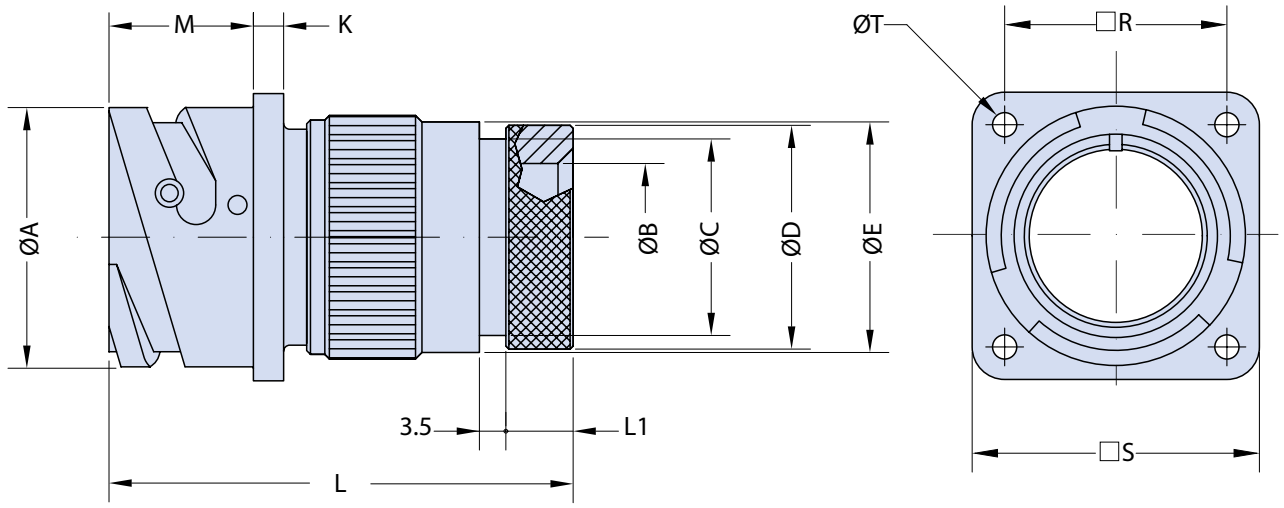

Application Notes

1. Front mount square flange receptacle assembly with backshell for heat shrink tubing. Through mounting holes.
2. Connector/Backshell Class "G" (environmental)—Wire Sealing grommet supplied.
3. Standard materials configuration consists of aluminum alloy. For platings, see TABLE II finish options.
4. Standard contact material consists of copper alloy with silver plating or gold plating.

© 2015 Glenair, Inc. U.S. CAGE Code 06324 Printed in Italy

Downloaded from Arrow.com.

ITS 3100 G and ITS 4100 G
Front Panel Mount Square Flange Receptacle Assembly
with Environment Backshell for Heat Shrink Tubing

TABLE I: DIMENSIONS

Shell Size	ØA +0.2 -0.1	ØB Min.	ØC ±0.1	ØD ±0.2	ØE ±0.2	K ±0.2	L Max.	L1 Max.	M +0.4 -0	R ±0.2	S ±0.2	ØT +0.1 -0
10 SL	18.2	8.5	13.0	15.5	17.0	2.8	53.0	8.2	14.2	18.25	25.4	3.2
14 S	24.5	12.0	16.5	19.1	20.1	3.2	53.5	8.2	14.2	23.00	30.4	3.2
16 S	27.2	14.5	21.5	23.9	23.5	3.2	53.5	8.2	14.2	24.60	32.5	3.2
16	27.2	14.5	21.5	23.9	23.5	3.2	65.5	8.0	19.0	24.60	32.5	3.2
18	30.7	17.5	21.7	23.9	26.5	4.0	66.0	8.0	19.0	27.00	35.0	3.2
20	34.0	19.5	26.0	29.6	30.5	4.0	66.5	8.9	19.0	29.40	38.0	3.2
22	37.3	22.0	26.0	29.6	33.6	4.0	66.5	8.9	19.0	31.75	41.0	3.2
24	40.9	25.0	34.5	37.8	36.1	4.0	66.5	9.2	20.6	34.90	44.5	3.7
28	46.7	29.0	34.5	37.8	41.4	4.0	66.5	9.2	20.6	39.70	50.9	3.7
32	53.4	34.0	43.6	47.8	48.6	4.0	84.0	11.7	22.2	44.50	57.0	4.3
36	59.6	38.5	43.6	47.8	54.8	4.0	84.0	11.7	22.2	49.20	63.5	4.3
40	65.5	48.0	52.6	57.8	60.9	4.0	84.0	11.7	22.2	55.55	69.9	4.3

TABLE II: MODIFICATION CODES

CONTACT OPTIONS		
Sym	**Description**	
B0	Connector without Contacts**	
B1	Connector with Gold Plated Contacts	
Omit for standard version (Silver plated)		
STANDARD MATERIAL AND FINISH (*)		
Sym	**Description**	**RoHS**
	Omit for Aluminum/ Cadmium Olive Drab	
F6	Aluminum/ Black Electrodeposited Paint	✓
F7	Aluminum/ Black Zinc Nickel	✓
F11	Aluminum/ Electroless Nickel	✓
MB	Marine Bronze/ Unplated	✓
FK	Stainless Steel/ Passivate	✓

(*) For further options, please contact the factory.

(**) Crimp Contacts Only

TABLE III

ELASTOMER OPTIONS	
Sym	**Description**
	Omit for Polychloroprene Elastomer
FR	Fire Resistant Elastomer
S	Silicone Elastomer

© 2015 Glenair, Inc. U.S. CAGE Code 06324 Printed in Italy

Downloaded from Arrow.com.

ITS 3100 GR and ITS 4100 GR
Front Panel Mount Square Flange Receptacle Assembly
with Rotating Coupling Nut Backshell for Heat Shrink Tubing

XX	ITS	31	00	GR	20-27	P	Y	XXX

- **XX** — Elastomer Option (See Table III)
- **ITS** — Reverse Bayonet Coupling
  ITS - Alumium Shell with Stainless Steel Studs
  ITB - Marine Bronze or Stainless Steel Shell without Stainless Steel Studs
  For further details, see diagram on page A-38
- **31** — Contact Type
  31 - Solder
  41 - Crimp
- **00** — *00* - Front Wall Mount
- **GR** — Connector/Backshell Class
  GR - Environmental; Supplied with Backshell for Heat-Shrink Tubing and Rotating Clamp Nut
- **20-27** — Shell Size and Insert Arrangement (See Section A)
- **P** — Alternate Insert Rotation (W, X, Y, Z) Omit for Normal (See Section A)
- **Y** — Contact Gender
  P - Pin
  S - Socket
- **XXX** — Mod Code Option (See Table II)

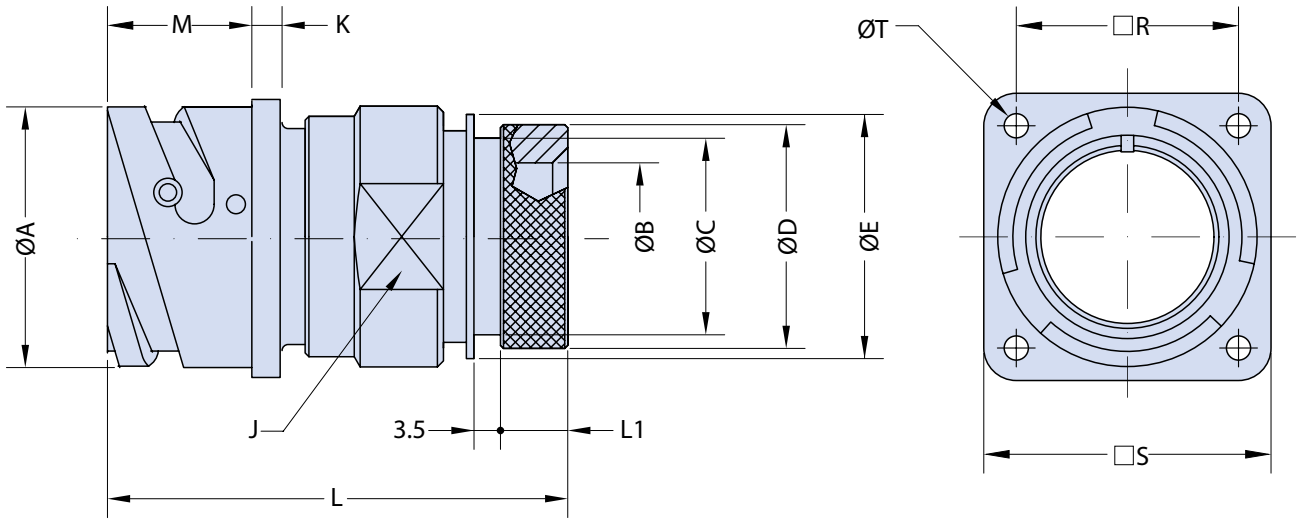

Application Notes

1. Front mount square flange receptacle assembly with backshell for heat shrink tubing. Rotating coupling nut supplied. Through mounting holes.
2. Connector/Backshell Class "GR" (environmental)—Wire sealing grommet supplied.
3. Standard materials configuration consists of aluminum alloy. For platings, see TABLE II finish options.
4. Standard contact material consists of copper alloy with silver plating or gold plating.

© 2015 Glenair, Inc. U.S. CAGE Code 06324 Printed in Italy

Downloaded from Arrow.com.

ITS 3100 GR and ITS 4100 GR
Front Panel Mount Square Flange Receptacle Assembly
with Rotating Coupling Nut Backshell for Heat Shrink Tubing

TABLE I: DIMENSIONS

Shell Size	ØA +0.2 -0.1	ØB Min.	ØC ±0.1	ØD ±0.2	ØE ±0.1	J Key	K ±0.2	L Max.	L1 ±0.1	M +0.4 0	R ±0.2	S ±0.2	ØT +0.1 0
10 SL	18.2	8.6	13.0	15.5	17.0	20	2.8	55.0	8.2	14.2	18.25	25.4	3.2
14 S	24.5	10.7	16.5	19.1	20.1	23	3.2	55.0	8.2	14.2	23.00	30.4	3.2
16 S	27.2	14.0	24.9	23.9	23.5	26	3.2	55.0	8.0	14.2	24.60	32.5	3.2
16	27.2	14.0	24.9	23.9	23.5	26	3.2	61.0	8.0	19.0	24.60	32.5	3.2
18	30.7	17.5	21.7	23.9	26.5	28	4.0	64.5	8.0	19.0	27.00	35.0	3.2
20	34.0	18.8	26.2	29.6	30.2	32	4.0	64.5	8.9	19.0	29.40	38.0	3.2
22	37.3	21.0	26.2	29.6	33.6	36	4.0	64.5	9.2	19.0	31.75	41.0	3.2
24	40.9	25.4	34.0	37.8	36.1	39	4.0	68.5	9.5	20.6	34.90	44.5	3.7
28	46.7	28.4	34.3	37.8	41.4	46	4.0	68.5	9.2	20.6	39.70	50.9	3.7
32	53.4	34.0	43.6	47.8	48.6	52	4.0	70.0	11.7	22.2	44.50	57.0	4.3
36	59.6	40.5	43.6	47.8	54.0	58	4.0	70.0	11.5	22.2	49.20	63.5	4.3
40	65.5	49.0	52.6	57.8	61.0	65	4.0	70.0	11.5	22.2	55.55	69.9	4.3

TABLE II: MODIFICATION CODES

CONTACT OPTIONS		
Sym	**Description**	
B0	Connector without Contacts**	
B1	Connector with Gold Plated Contacts	
Omit for standard version (Silver plated)		
STANDARD MATERIAL AND FINISH (*)		
Sym	**Description**	**RoHS**
	Omit for Aluminum/ Cadmium Olive Drab	
F6	Aluminum/ Black Electrodeposited Paint	✓
F7	Aluminum/ Black Zinc Nickel	✓
F11	Aluminum/ Electroless Nickel	✓
MB	Marine Bronze/ Unplated	✓
FK	Stainless Steel/ Passivate	✓

(*) For further options, please contact the factory.

(**) Crimp Contacts Only

TABLE III

ELASTOMER OPTIONS	
Sym	**Description**
	Omit for Polychloroprene Elastomer
FR	Fire Resistant Elastomer
S	Silicone Elastomer

© 2015 Glenair, Inc. U.S. CAGE Code 06324 Printed in Italy

Downloaded from Arrow.com.

ITS 3100 RS and ITS 4100 RS
Front Panel Mount Square Flange Receptacle
with Lipped Backshell

XX	ITS	31	00	RS	20-27	P	Y	XXX

- **XX** — Elastomer Option (See Table III)
- **ITS** — Reverse Bayonet Coupling
  ITS - Alumium Shell with Stainless Steel Studs
  ITB - Marine Bronze or Stainless Steel Shell without Stainless Steel Studs
  For further details, see diagram on page A-38
- **31** — Contact Type
  31 - Solder
  41 - Crimp
- **00** — *00* - Front Wall Mount
- **RS** — Connector/Backshell Class
  RS - Environmental; Supplied with Grommet and Lipped Backshell
- **20-27** — Shell Size and Insert Arrangement (See Section A)
- **P** — Contact Gender
  P - Pin
  S - Socket
- **Y** — Alternate Insert Rotation (W, X, Y, Z) Omit for Normal (See Section A)
- **XXX** — Mod Code Option (See Table II)

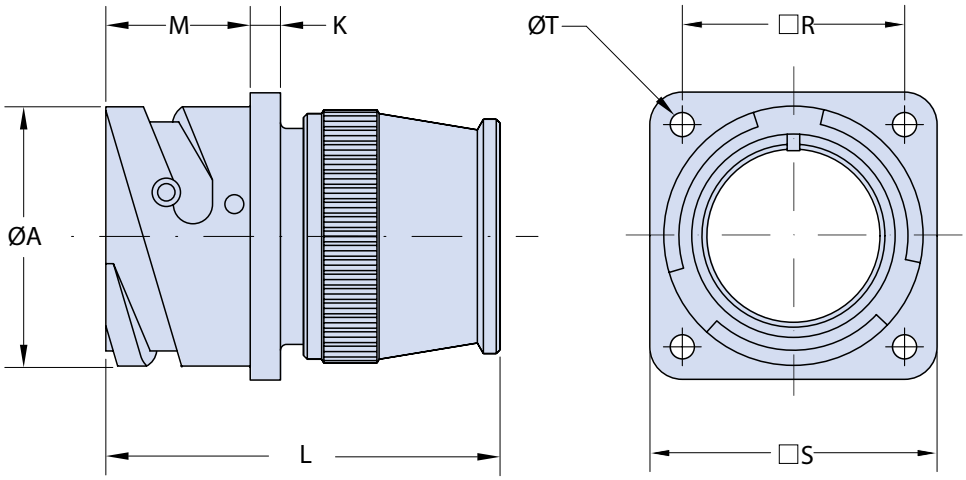

Application Notes

1. Front mount square flange receptacle with a wire sealing grommet and backshell for use with individual wire assemblies. Through mounting holes.
2. Connector/Backshell Class "RS" (environmental)—Wire sealing grommet supplied.
3. Standard materials configuration consists of aluminum alloy. For platings, see TABLE II finish options.
4. Standard contact material consists of copper alloy with silver plating or gold plating.

© 2015 Glenair, Inc. U.S. CAGE Code 06324 Printed in Italy

Downloaded from Arrow.com.

ITS 3100 RS and ITS 4100 RS
Front Panel Mount Square Flange Receptacle
with Lipped Backshell

TABLE I: DIMENSIONS

Shell Size	ØA +0.2 -0.1	K ±0.2	L Max.	M +0.4 -0	R ±0.2	S ±0.2	ØT +0.1 -0
10 SL	18.2	2.8	44.0	14.2	18.25	25.4	3.2
14 S	24.5	3.2	48.5	14.2	23.00	30.4	3.2
16 S	27.2	3.2	48.5	14.2	24.60	32.5	3.2
16	27.2	3.2	56.5	19.0	24.60	32.5	3.2
18	30.7	4.0	57.0	19.0	27.00	35.0	3.2
20	34.0	4.0	57.0	19.0	29.40	38.0	3.2
22	37.3	4.0	58.0	19.0	31.75	41.0	3.2
24	40.9	4.0	58.5	20.6	34.90	44.5	3.7
28	46.7	4.0	58.5	20.6	39.70	50.9	3.7
32	53.4	4.0	60.5	22.2	44.50	57.0	4.3
36	59.6	4.0	60.5	22.2	49.20	63.5	4.3
40	65.5	4.0	60.5	22.2	55.55	69.9	4.3

TABLE II: MODIFICATION CODES

CONTACT OPTIONS		
Sym	**Description**	
B0	Connector without Contacts**	
B1	Connector with Gold Plated Contacts	
Omit for standard version (Silver plated)		
STANDARD MATERIAL AND FINISH (*)		
Sym	**Description**	**RoHS**
	Omit for Aluminum/ Cadmium Olive Drab	
F6	Aluminum/ Black Electrodeposited Paint	✓
F7	Aluminum/ Black Zinc Nickel	✓
F11	Aluminum/ Electroless Nickel	✓
MB	Marine Bronze/ Unplated	✓
FK	Stainless Steel/ Passivate	✓

(*) For further options, please contact the factory.

(**) Crimp Contacts Only

TABLE III

ELASTOMER OPTIONS	
Sym	**Description**
	Omit for Polychloroprene Elastomer
FR	Fire Resistant Elastomer
S	Silicone Elastomer

© 2015 Glenair, Inc. U.S. CAGE Code 06324 Printed in Italy

Downloaded from Arrow.com.

ITS 3100 SP and ITS 4100 SP
Front Panel Mount Square Flange Receptacle Assembly
with Environmental Backshell for EMI/RFI Shield Termination

XX	ITS	31	00	SP	20-27	P	Y	XXX

- **XX** — Elastomer Option (See Table III)
- **ITS** — Reverse Bayonet Coupling
  ITS - Alumium Shell with Stainless Steel Studs
  ITB - Marine Bronze or Stainless Steel Shell without Stainless Steel Studs
  For further details, see diagram on page A-38
- **31** — Contact Type
  31 - Solder
  41 - Crimp
- **00** — *00* - Front Wall Mount
- **SP** — Connector/Backshell Class
  SP - Environmental; Supplied with Grommet and EMI/RFI Backshell
- **20-27** — Shell Size and Insert Arrangement (See Section A)
- **P** — Contact Gender
  P - Pin
  S - Socket
- **Y** — Alternate Insert Rotation (W, X, Y, Z) Omit for Normal (See Section A)
- **XXX** — Mod Code Option (See Table II)

B

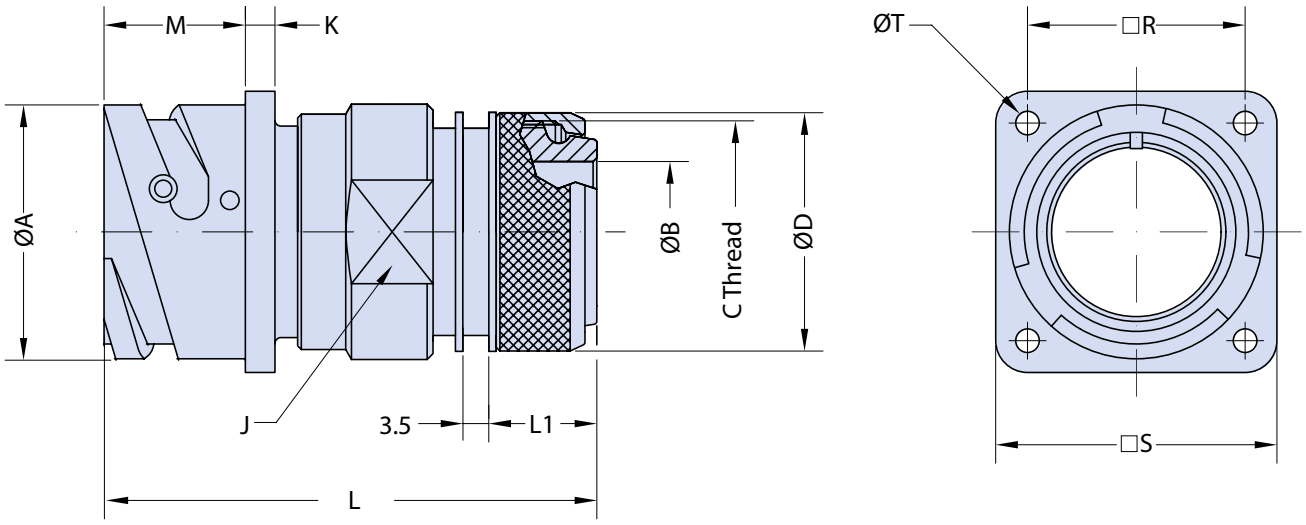

Application Notes

1. Front panel mount square flange receptacle with EMI/RFI shield termination backshell. Backshell features rotating coupling nut and a "braid-trap" for termination of braided shielding. Heat-shrink tubing may also beattached for additional environmental and mechanical protection. Through mounting holes.
2. Connector/Backshell Class "SP" (environmental)—Wire sealing grommet supplied.
3. Standard materials configuration consists of aluminum alloy. For platings, see TABLE II finish options.
4. Standard contact material consists of copper alloy with silver plating or gold plating.

© 2015 Glenair, Inc. U.S. CAGE Code 06324 Printed in Italy

Downloaded from Arrow.com.

TABLE I: DIMENSIONS

Shell Size	ØA +0.2 -0.1	ØB Min.	C Thread	ØD ±0.2	J Key	K ±0.2	L Max.	L1 Max.	M +0.4 -0	R ±0.2	S ±0.2	ØT +0.1 -0
10 SL	18.2	8.6	M16X1	18.5	20	2.8	57.0	14.0	14.2	18.25	25.4	3.2
14 S	24.5	10.7	M20X1	22.3	23	3.2	57.0	14.0	14.2	23.00	30.4	3.2
16 S	27.2	13.9	M23X1	25.3	26	3.2	58.5	15.6	14.2	24.60	32.5	3.2
16	27.2	13.9	M23X1	25.3	26	3.2	67.5	15.6	19.0	24.60	32.5	3.2
18	30.7	15.0	M26X1	28.0	28	4.0	69.0	14.6	19.0	27.00	35.0	3.2
20	34.0	18.8	M30X1	32.3	32	4.0	69.0	14.6	19.0	29.40	38.0	3.2
22	37.3	22.0	M32X1	34.3	36	4.0	69.0	14.6	19.0	31.75	41.0	3.2
24	40.9	25.0	M36X1	38.3	39	4.0	70.5	14.6	20.6	34.90	44.5	3.7
28	46.7	28.4	M39X1	41.2	46	4.0	70.5	14.6	20.6	39.70	50.9	3.7
32	53.4	34.0	M45X1	48.3	52	4.0	72.0	14.6	22.2	44.50	57.0	4.3
36	59.6	40.5	M52X1	55.0	58	4.0	72.0	15.0	22.2	49.20	63.5	4.3
40	65.5	49.0	M59X1	62.0	65	4.0	72.0	15.5	22.2	55.55	69.9	4.3

TABLE II: MODIFICATION CODES

CONTACT OPTIONS		
Sym	**Description**	
B0	Connector without Contacts**	
B1	Connector with Gold Plated Contacts	
Omit for standard version (Silver plated)		
STANDARD MATERIAL AND FINISH (*)		
Sym	**Description**	**RoHS**
	Omit for Aluminum/ Cadmium Olive Drab	
F7	Aluminum/ Black Zinc Nickel	✓
F11	Aluminum/ Electroless Nickel	✓
MB	Marine Bronze/ Unplated	✓
FK	Stainless Steel/ Passivate	✓

(*) For further options, please contact the factory.

(**) Crimp Contacts Only

TABLE III

ELASTOMER OPTIONS	
Sym	**Description**
	Omit for Polychloroprene Elastomer
FR	Fire Resistant Elastomer
S	Silicone Elastomer

© 2015 Glenair, Inc.

Downloaded from Arrow.com.

ITS 3100 A ZL and ITS 3100 R ZL
ITS 4100 A ZL and ITS 4100 R ZL
Front Panel Mount Square Flange Receptacle Assembly
with BAND-IT Backshell

XX	ITS	31	00	A	20-27	P	Y	XX	ZL	XX	XXX
Elastomer Option (See Table V)	Reverse Bayonet Coupling *ITS* - Alumium Shell with Stainless Steel Studs *ITB* - Marine Bronze or Stainless Steel Shell without Stainless Steel Studs For further details, see diagram on page A-38	Contact Type *31* - Solder *41* - Crimp	*00* - Front Wall Mount	Connector/Backshell Class *A* - Non-Environmental; Supplied with Backshell Only *R* - Environmental; Supplied with Backshell and Grommet	Shell Size and Insert Arrangement (See Section A)	Contact Gender *P* - Pin *S* - Socket	Alternate Insert Rotation (W, X, Y, Z) Omit for Normal (See Section A)	Contact Options (See Table III)	BAND-IT Backshell *ZLF* - Supplied with Metallic Band	Entry Size (See Table II)	Finish Options (See Table IV)

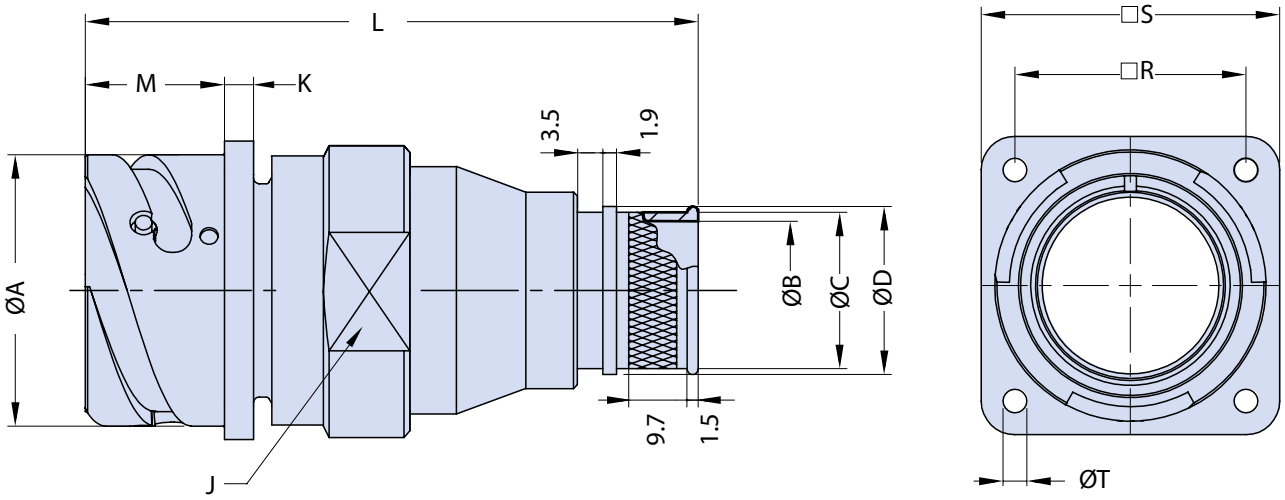

Application Notes

1. Front panel mount square flange receptacle with rear-end backshell for attachment of BAND-IT. Through mounting holes.
2. Connector/Backshell Class "A" (non-environmental)—Not supplied with wire sealing grommet; Class "R" (environmental)—Supplied with grommet.
3. Standard materials configuration consists of aluminum alloy. For platings, see TABLE IV finish options.
4. Standard contact material consists of copper alloy with silver plating or gold plating.

© 2015 Glenair, Inc. U.S. CAGE Code 06324 Printed in Italy

Downloaded from Arrow.com.

ITS 3100 A ZL and ITS 3100 R ZL
ITS 4100 A ZL and ITS 4100 R ZL
Front Panel Mount Square Flange Receptacle Assembly
with BAND-IT Backshell

TABLE I: DIMENSIONS

Size	L Max.	M +0.4 -0	A +0.2 -0.1	K ±0.2	J Key	R ±0.2	S ±0.2	ØT +0.1 -0	Entry Size [a]
10 SL	69.5	14.2	18.2	2.8	20	18.25	25.4	3.2	01÷06
14 S	70.0	14.2	24.5	3.2	23	23.00	30.4	3.2	03÷08
16 S	70.0	14.2	27.2	3.2	26	24.60	32.5	3.2	05÷10
16	79.0	19.0	27.2	3.2	26	24.60	32.5	3.2	05÷10
18	83.5	19.0	30.7	4.0	28	27.00	35.0	3.2	07÷12
20	94.0	19.0	34.0	4.0	32	29.40	38.0	3.2	09÷14
22	99.0	19.0	37.3	4.0	36	31.75	41.0	3.2	11÷16
24	101.0	20.6	40.9	4.0	39	34.90	44.5	3.7	12÷17
28	106.0	20.6	46.7	4.0	46	39.70	50.9	3.7	13÷19
32	112.5	22.2	53.4	4.0	52	44.50	57.0	4.3	17÷22
36	112.5	22.2	59.6	4.0	58	49.20	63.5	4.3	19÷23
40	117.5	22.2	65.5	4.0	65	55.55	69.9	4.3	21÷24

(a) For further entry size, please contact the factory.

TABLE II: ENTRY SIZE TABLE

Entry Size	ØB	ØC	ØD
01	3.2	6.4	7.9
02	4.8	7.9	9.5
03	6.4	9.5	11.1
04	7.9	11.1	12.7
05	9.5	12.7	14.3
06	11.1	14.3	15.8
07	12.7	15.9	17.4
08	14.3	17.5	19.1
09	15.9	19.1	20.6
10	17.5	20.6	22.2
11	19.1	22.2	23.8
12	20.6	23.8	25.4
13	22.2	25.4	27.0
14	23.8	27.0	28.5
15	25.4	28.6	30.1
16	27.0	30.2	31.8
17	28.6	31.8	33.3
18	31.8	34.9	36.5
19	34.9	38.1	39.7
20	38.1	41.3	42.8
21	41.3	44.5	46.0
22	44.5	47.6	49.2
23	47.6	50.8	52.4
24	50.8	54.0	55.5

TABLE III: MODIFICATION CODES

CONTACT OPTIONS	
Sym	**Description**
B0	Connector without Contacts**
B1	Connector with Gold Plated Contacts
Omit for standard version (Silver plated)	

TABLE IV: MODIFICATION CODES

STANDARD MATERIAL AND FINISH (*)		
Sym	**Description**	**RoHS**
	Omit for Aluminum/ Cadmium Olive Drab	
F7	Aluminum/ Black Zinc Nickel	✓
F11	Aluminum/ Electroless Nickel	✓
MB	Marine Bronze/ Unplated	✓
FK	Stainless Steel/ Passivate	✓

TABLE V

ELASTOMER OPTIONS	
Sym	**Description**
	Omit for Polychloroprene Elastomer
FR	Fire Resistant Elastomer
S	Silicone Elastomer

(*) For further options, please contact the factory.
(**) Crimp Contacts Only

© 2015 Glenair, Inc. U.S. CAGE Code 06324 Printed in Italy

Downloaded from Arrow.com.

ITS 3101 A N0 and ITS 4101 A N0 In-Line Cylindrical Receptacle with Accessory Mounting Thread

Elastomer Option (See Table III)	Contact Type	Connector Class	Contact Gender	Contact Options (See Table IV)	Mod Code Option (See Table II)
	31 - Solder *41* - Crimp	*A* - General Duty *R* - Sealed Insulator	*P* - Pin *S* - Socket		

XX	ITS	31	01	A	20-27	P	Y	XX	N0	XXX

Reverse Bayonet Coupling *ITS* - Alumium Shell with Stainless Steel Studs *ITB* - Marine Bronze or Stainless Steel Shell without Stainless Steel Studs For further details, see diagram on page A-38	*01* - In-Line	Shell Size and Insert Arrangement (See Section A)	Alternate Insert Rotation (W, X, Y, Z) Omit for Normal (See Section A)	*NO* - No Backshell *NOG* - Supplied with Grommet and Compression Ring, No Backshell	

B

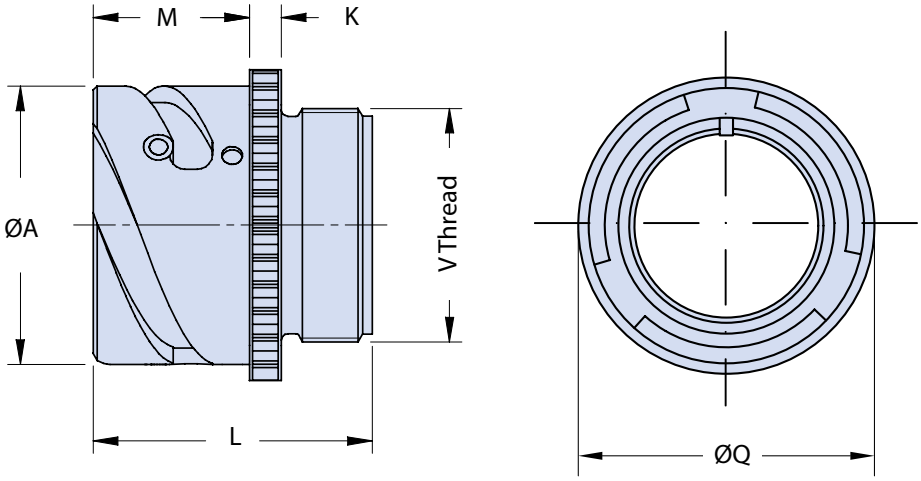

Application Notes

1. In-line cylindrical receptacle with rear thread fot attachment of various backend connector accessories.
2. Connector Class "A" (non environmental). Connector Class "R" (environmental): sealed insulator only with solder contacts.
3. Standard materials configuration consists of aluminum alloy. For platings, see TABLE II finish options.
4. Standard contact material consists of copper alloy with silver plating or gold plating.
5. A broad range of other front and rear connector accessories are available.
   See our website and/or contact the factory for complete information.

© 2015 Glenair, Inc. U.S. CAGE Code 06324 Printed in Italy

Downloaded from Arrow.com.

ITS 3101 A N0 and ITS 4101 A N0
In-Line Cylindrical Receptacle with Accessory Mounting Thread

Glenair®

TABLE I: DIMENSIONS

Shell Size	ØA +0.2 -0.1	K ±0.2	L Max.	M +0.4 -0	ØQ ±0.1	V Thread
10 SL	18.2	2.8	24.7	14.2	21.8	0.6250 - 24UNEF
14 S	24.5	3.2	24.9	14.2	28.8	0.7500 - 20UNEF
16 S	27.2	3.2	24.9	14.2	30.5	0.8750 - 20UNEF
16	27.2	3.2	33.9	19.0	30.5	0.8750 - 20UNEF
18	30.7	4.0	34.3	19.0	33.8	1.0000 - 20UNEF
20	34.0	4.0	34.2	19.0	36.9	1.1250 - 18UNEF
22	37.3	4.0	34.3	19.0	39.5	1.2500 - 18UNEF
24	40.9	4.0	35.8	20.6	43.9	1.3750 - 18UNEF
28	46.7	4.0	35.8	20.6	48.4	1.6250 - 18UNEF
32	53.4	4.0	37.4	22.2	56.0	1.8750 - 16UN
36	59.6	4.0	37.4	22.2	62.4	2.0625 - 16UNS
40	65.5	4.0	37.4	22.2	68.6	2.3125 - 16UNS

TABLE II: MODIFICATION CODES

STANDARD MATERIAL AND FINISH (*)		
Sym	**Description**	**RoHS**
	Omit for Aluminum/ Cadmium Olive Drab	
F6	Aluminum/ Black Electrodeposited Paint	✓
F7	Aluminum/ Black Zinc Nickel	✓
F11	Aluminum/ Electroless Nickel	✓
MB	Marine Bronze/ Unplated	✓
FK	Stainless Steel/ Passivate	✓

TABLE III

ELASTOMER OPTIONS	
Sym	**Description**
	Omit for Polychloroprene Elastomer
FR	Fire Resistant Elastomer
S	Silicone Elastomer

TABLE IV: MODIFICATION CODES

CONTACT OPTIONS	
Sym	**Description**
B0	Connector without Contacts**
B1	Connector with Gold Plated Contacts
Omit for standard version (Silver plated)	

(*) For further options, please contact the factory.

(**) Crimp Contacts Only

© 2015 Glenair, Inc. U.S. CAGE Code 06324 Printed in Italy

Downloaded from Arrow.com.

ITS 3101 A and ITS 3101 R
ITS 4101 A and ITS 4101 R
In-Line Cylindrical Receptacle
with Backshell for the Attachment of Additional Accessories

XX	ITS	31	01	A	20-27	P	Y	XXX

- **XX** — Elastomer Option (See Table III)
- **ITS** — Reverse Bayonet Coupling
  ITS - Alumium Shell with Stainless Steel Studs
  ITB - Marine Bronze or Stainless Steel Shell without Stainless Steel Studs
  For further details, see diagram on page A-38
- **31** — Contact Type
  31 - Solder
  41 - Crimp
- **01** — *01* - In-Line
- **A** — Connector/Backshell Class
  A - Non-Environmental; Supplied with Backshell Only
  R - Environmental; Supplied with Backshell and Grommet
- **20-27** — Shell Size and Insert Arrangement (See Section A)
- **P** — Contact Gender
  P - Pin
  S - Socket
- **Y** — Alternate Insert Rotation (W, X, Y, Z) Omit for Normal (See Section A)
- **XXX** — Mod Code Option (See Table II)

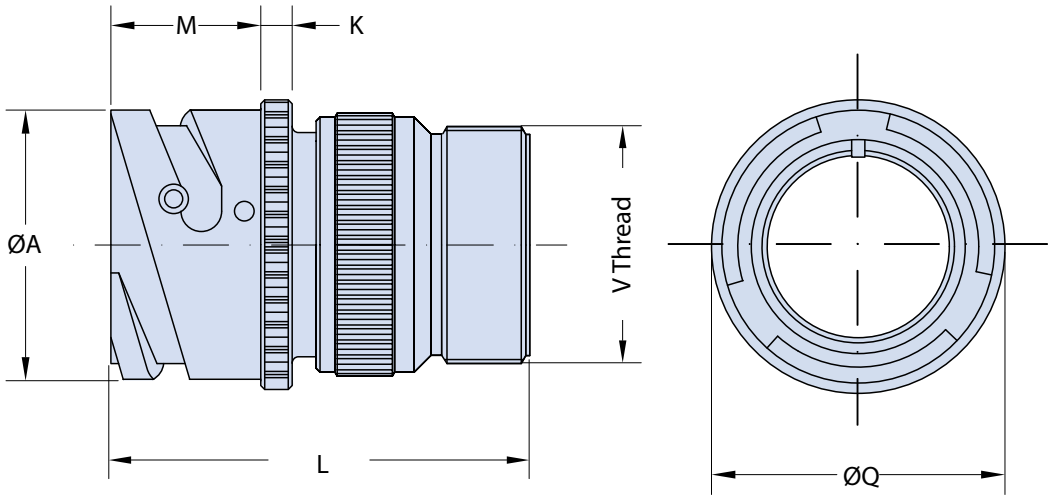

Application Notes

1. In-line cylindrical receptacle with rear thread fot attachment of various backend connector accessories.
2. Connector/Backshell Class "A" (non-environmental)—Not supplied with wire sealing grommet; Class "R" (environmental)—Supplied with grommet.
3. Standard materials configuration consists of aluminum alloy. For platings, see TABLE II finish options.
4. Standard contact material consists of copper alloy with silver plating or gold plating.
5. A broad range of other front and rear connector accessories are available. See our website and/or contact the factory for complete information.
6. Order cable clamps separately.

© 2015 Glenair, Inc. U.S. CAGE Code 06324 Printed in Italy

Downloaded from Arrow.com.

ITS 3101 A and ITS 3101 R
ITS 4101 A and ITS 4101 R
In-Line Cylindrical Receptacle
with Backshell for the Attachment of Additional Accessories

TABLE I: DIMENSIONS

Shell Size	ØA +0.2 -0.1	K ±0.2	L Max.	M +0.4 -0	ØQ ±0.1	V Thread
10 SL	18.2	2.8	44.0	14.2	21.8	0.6250 - 24UNEF
14 S	24.5	3.2	46.5	14.2	28.8	0.7500 - 20UNEF
16 S	27.2	3.2	46.5	14.2	30.5	0.8750 - 20UNEF
16	27.2	3.2	57.0	19.0	30.5	0.8750 - 20UNEF
18	30.7	4.0	58.0	19.0	33.8	1.0000 - 20UNEF
20	34.0	4.0	58.0	19.0	36.9	1.1875 - 18UNEF
22	37.3	4.0	58.5	19.0	39.5	1.1875 - 18UNEF
24	40.9	4.0	60.5	20.6	43.9	1.4375 - 18UNEF
28	46.7	4.0	66.5	20.6	48.4	1.4375 - 18UNEF
32	53.4	4.0	71.5	22.2	56.0	1.7500 - 18UNS
36	59.6	4.0	77.0	22.2	62.4	2.0000 - 18UNS
40	65.5	4.0	77.0	22.2	68.6	2.2500 - 16UN

TABLE II: MODIFICATION CODES

CONTACT OPTIONS		
Sym	**Description**	
B0	Connector without Contacts**	
B1	Connector with Gold Plated Contacts	
Omit for standard version (Silver plated)		
STANDARD MATERIAL AND FINISH (*)		
Sym	**Description**	**RoHS**
	Omit for Aluminum/ Cadmium Olive Drab	
F6	Aluminum/ Black Electrodeposited Paint	✓
F7	Aluminum/ Black Zinc Nickel	✓
F11	Aluminum/ Electroless Nickel	✓
MB	Marine Bronze/ Unplated	✓
FK	Stainless Steel/ Passivate	✓

(*) For further options, please contact the factory.

(**) Crimp Contacts Only

TABLE III

ELASTOMER OPTIONS	
Sym	**Description**
	Omit for Polychloroprene Elastomer
FR	Fire Resistant Elastomer
S	Silicone Elastomer

© 2015 Glenair, Inc. U.S. CAGE Code 06324 Printed in Italy

Downloaded from Arrow.com.

ITS 3101 A BR and ITS 3101 R BR
ITS 4101 A BR and ITS 4101 R BR
In-Line Cylindrical Receptacle
with Backshell for Termination of UNI4883 Rubber Conduits

Elastomer Option (See Table V)	Contact Type *31* - Solder *41* - Crimp	*01* - In-Line	Shell Size and Insert Arrangement (See Section A)	Alternate Insert Rotation (W, X, Y, Z) Omit for Normal (See Section A)	UNI4883 Backshell Adapter Shell Size Designator (See Note 1)
XX	ITS 31	01	A 20-27	P Y	XX BR2722 XXX

Reverse Bayonet Coupling	Connector/Backshell Class	Contact Gender	Contact Options	Mod Code Option
ITS - Alumium Shell with Stainless Steel Studs *ITB* - Marine Bronze or Stainless Steel Shell without Stainless Steel Studs For further details, see diagram on page A-38	*A* - Non-Environmental; Supplied with Backshell Only *R* - Environmental; Supplied with Backshell and Grommet	*P* - Pin *S* - Socket	(See Table IV)	(See Table III)

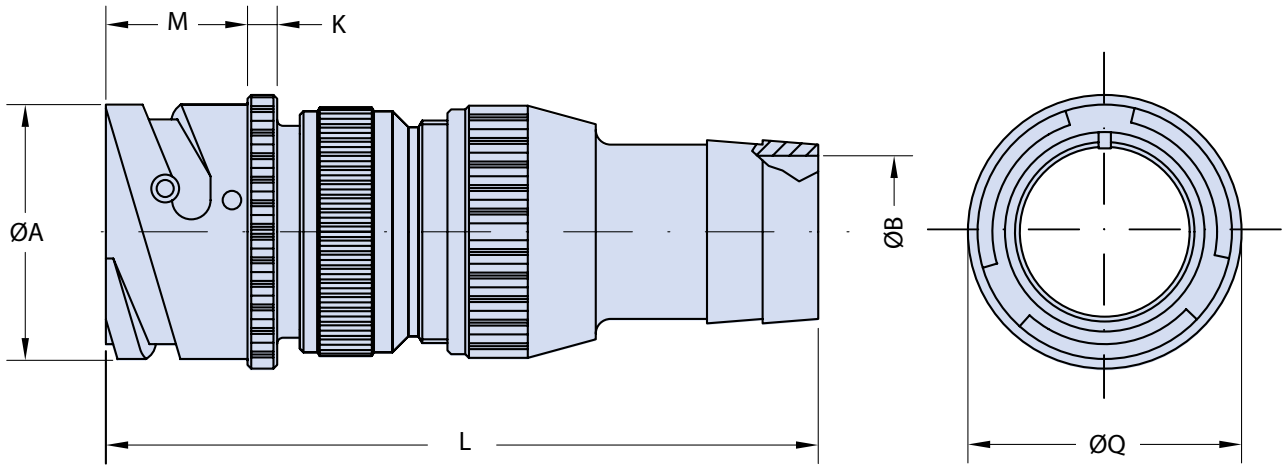

Application Notes

1. In-line receptacle with rear-end backshell for termination of UNI4883 type rubber conduit.
2. Connector/Backshell Class "A" (non-environmental)—Not supplied with wire sealing grommet; Class "R" (environmental)—Supplied with grommet.
3. Standard materials configuration consists of aluminum alloy. For platings, see TABLE III finish options.
4. Standard contact material consists of copper alloy with silver plating or gold plating.

© 2015 Glenair, Inc. U.S. CAGE Code 06324 Printed in Italy

Downloaded from Arrow.com.

ITS 3101 A BR and ITS 3101 R BR
ITS 4101 A BR and ITS 4101 R BR
In-Line Cylindrical Receptacle
with Backshell for Termination of UNI4883 Rubber Conduits

TABLE I: DIMENSIONS

Shell Size	ØA +0.2 -0.1	ØB ±0.1	K ±0.2	L Max.	M +0.4 -0	ØQ ±0.1
10 SL	18.2	See Table III Below	2.8	90.0	14.2	21.8
14 S	24.5		3.2	91.5	14.2	28.8
16 S	27.2		3.2	91.5	14.2	30.5
16	27.2		3.2	103.0	19.0	30.5
18	30.7		4.0	103.0	19.0	33.8
20	34.0		4.0	103.0	19.0	36.9
22	37.3		4.0	103.0	19.0	39.5
24	40.9		4.0	104.5	20.6	43.9
28	46.7		4.0	111.0	20.6	48.4
32	53.4		4.0	116.5	22.2	56.0
36	59.6		4.0	122.0	22.2	62.4
40	65.5		4.0	122.0	22.2	68.6

TABLE II: BACKSHELL DIMENSIONS

Shell Size	Rubber tube in accordance with UNI 4883 to be used by size		ØB ±0.1
	Ø Min	Ø Max	
10 SL	12.0	17.0	10.5
14 S	22.0	27.0	16.5
16-16S	12.0	17.0	10.5
16-16S	15.0	20.0	14.0
18	22.0	27.0	20.5
20 - 22	12.0	17.0	10.5
20 - 22	20.0	25.0	18.5
20 - 22	22.0	27.0	20.5
20 - 22	28.0	33.0	25.0
20 - 22	30.0	35.0	28.5
20 - 22	33.0	38.0	31.5
24 - 28	20.0	25.0	18.5
24 - 28	22.0	27.0	20.5
24 - 28	25.0	30.0	23.5
24 - 28	28.0	33.0	26.5
24 - 28	30.0	35.0	28.5
24 - 28	33.0	38.0	31.5
24 - 28	45.0	50.0	43.5
32	25.0	30.0	23.5
32	28.0	33.0	26.5
32	30.0	35.0	28.5
32	35.0	40.0	31.5
32	40.0	45.0	38.5
32	45.0	50.0	40.0
36	30.0	35.0	28.5
36	35.0	40.0	31.5
36	45.0	50.0	43.5
40	30.0	35.0	28.5
40	35.0	40.0	31.5
40	40.0	45.0	38.5
40	45.0	50.0	43.5
40	50.0	55.0	48.5

TABLE III: MODIFICATION CODES

STANDARD MATERIAL AND FINISH (*)		
Sym	**Description**	**RoHS**
	Omit for Aluminum/ Cadmium Olive Drab	
F6	Aluminum/ Black Electrodeposited Paint	✓
F7	Aluminum/ Black Zinc Nickel	✓
F11	Aluminum/ Electroless Nickel	✓
MB	Marine Bronze/ Unplated	✓
FK	Stainless Steel/ Passivate	✓

TABLE IV: MODIFICATION CODES

CONTACT OPTIONS	
Sym	**Description**
B0	Connector without Contacts**
B1	Connector with Gold Plated Contacts
Omit for standard version (Silver plated)	

TABLE V

ELASTOMER OPTIONS	
Sym	**Description**
	Omit for Polychloroprene Elastomer
FR	Fire Resistant Elastomer
S	Silicone Elastomer

(*) For further options, please contact the factory.

(**) Crimp Contacts Only

© 2015 Glenair, Inc.

U.S. CAGE Code 06324

Printed in Italy

Downloaded from Arrow.com.

ITS 3101 A PG and ITS 3101 R PG
ITS 4101 A PG and ITS 4101 R PG
In-Line Cylindrical Receptacle with Backshell
for Use with PG Cable Glands

Elastomer Option (See Table III)	Contact Type	Connector/Backshell Class	Alternate Insert Rotation (W, X, Y, Z) Omit for Normal (See Section A)	PG Thread (See Table I)
	31 - Solder *41* - Crimp	*A* - Non-Environmental; Supplied with Backshell Only *R* - Environmental; Supplied with Backshell and Grommet		

XX	ITS	31	01	A	20-27	P	Y	XX	PG16	XXX

ITS	01	20-27	P	XX	XXX
Reverse Bayonet Coupling *ITS* - Alumium Shell with Stainless Steel Studs *ITB* - Marine Bronze or Stainless Steel Shell without Stainless Steel Studs For further details, see diagram on page A-38	*01* - In-Line	Shell Size and Insert Arrangement (See Section A)	Contact Gender *P* - Pin *S* - Socket	Contact Options (See Table IV)	Mod Code Option (See Table II)

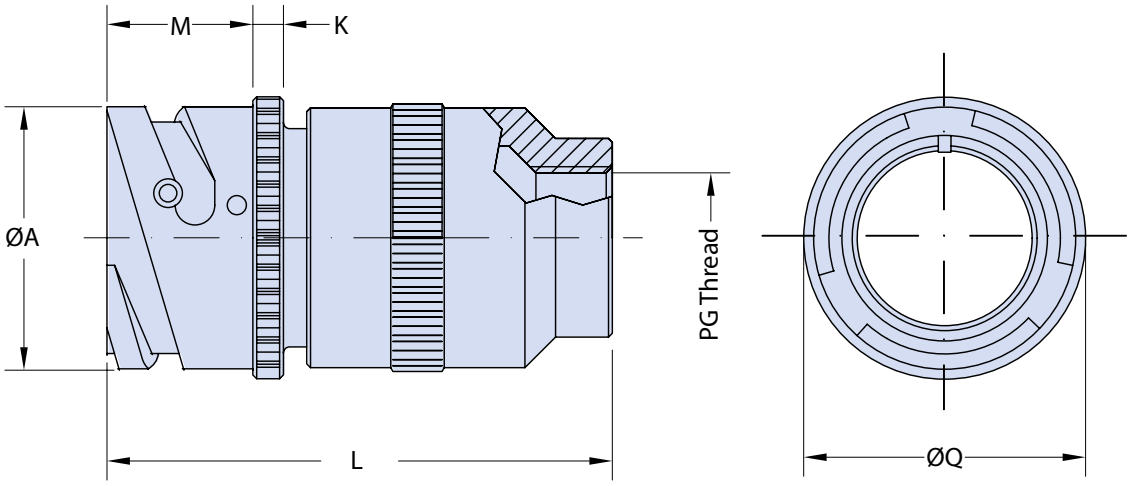

Application Notes

1. In-line receptacle with backshell adapter threaded for use with PG cable glands (not included). Other types of PG adaptors can be supplied in various sizes and angles upon request.
2. Connector/Backshell Class "A" (non-environmental)—Not supplied with wire sealing grommet; Class "R" (environmental)—Supplied with grommet.
3. Standard materials configuration consists of aluminum alloy. For platings, see TABLE II finish options.
4. Standard contact material consists of copper alloy with silver plating or gold plating.
5. Other types of front and rear connector accessories are available. See our website and/or contact the factory for complete information.

© 2015 Glenair, Inc. U.S. CAGE Code 06324 Printed in Italy

Downloaded from Arrow.com.

ITS 3101 A PG and ITS 3101 R PG
ITS 4101 A PG and ITS 4101 R PG
In-Line Cylindrical Receptacle with Backshell
for Use with PG Cable Glands

Glenair®

TABLE I: DIMENSIONS

Shell Size	ØA +0.2 -0.1	K ±0.2	L Max.	M +0.4 -0	PG Thread Other PG Threads available on request	ØQ ±0.1
10 SL	18.2	2.8	52.0	14.2	7 / 9 / 11	21.8
14 S	24.5	3.2	54.5	14.2	9/ 11 / 13.5	28.8
16 S	27.2	3.2	54.5	14.2	11 / 13.5 / 16	30.5
16	27.2	3.2	70.0	19.0	11 / 13.5 / 16	30.5
18	30.7	4.0	70.0	19.0	13.5 / 16 / 21	33.8
20	34.0	4.0	71.5	19.0	13.5 / 16 / 21	36.9
22	37.3	4.0	71.5	19.0	13.5 / 16 / 21	39.5
24	40.9	4.0	76.5	20.6	16 / 21/ 29	43.9
28	46.7	4.0	76.5	20.6	16 / 21/ 29	48.4
32	53.4	4.0	84.0	22.2	16 / 21/ 29	56.0
36	59.6	4.0	89.0	22.2	21 / 29 / 36	62.4
40	65.5	4.0	94.0	22.2	21 / 29 / 36	68.6

TABLE II: MODIFICATION CODES

STANDARD MATERIAL AND FINISH (*)		
Sym	**Description**	**RoHS**
	Omit for Aluminum/ Cadmium Olive Drab	
F6	Aluminum/ Black Electrodeposited Paint	✓
F7	Aluminum/ Black Zinc Nickel	✓
F11	Aluminum/ Electroless Nickel	✓
MB	Marine Bronze/ Unplated	✓
FK	Stainless Steel/ Passivate	✓

TABLE III

ELASTOMER OPTIONS	
Sym	**Description**
	Omit for Polychloroprene Elastomer
FR	Fire Resistant Elastomer
S	Silicone Elastomer

TABLE IV: MODIFICATION CODES

CONTACT OPTIONS	
Sym	**Description**
B0	Connector without Contacts**
B1	Connector with Gold Plated Contacts
Omit for standard version (Silver plated)	

(*) For further options, please contact the factory.

(**) Crimp Contacts Only

© 2015 Glenair, Inc. U.S. CAGE Code 06324 Printed in Italy

Downloaded from Arrow.com.

ITS 3101 A FM and ITS 3101 R FM
ITS 4101 A FM and ITS 4101 R FM
In-Line Cylindrical Receptacle Assembly
with Backshell for Use with Metric Cable Glands

XX	ITS	31	01	A	20-27	P	Y	XX	FM25	XXX
Elastomer Option (See Table III)	Reverse Bayonet Coupling *ITS* - Alumium Shell with Stainless Steel Studs *ITB* - Marine Bronze or Stainless Steel Shell without Stainless Steel Studs For further details, see diagram on page A-38	Contact Type *31* - Solder *41* - Crimp	*01* - In-Line	Connector/Backshell Class *A* - Non-Environmental; Supplied with Backshell Only *R* - Environmental; Supplied with Backshell and Grommet	Shell Size and Insert Arrangement (See Section A)	Contact Gender *P* - Pin *S* - Socket	Alternate Insert Rotation (W, X, Y, Z) Omit for Normal (See Section A)	Contact Options (See Table IV)	Metric Thread (See Table I)	Mod Code Option (See Table II)

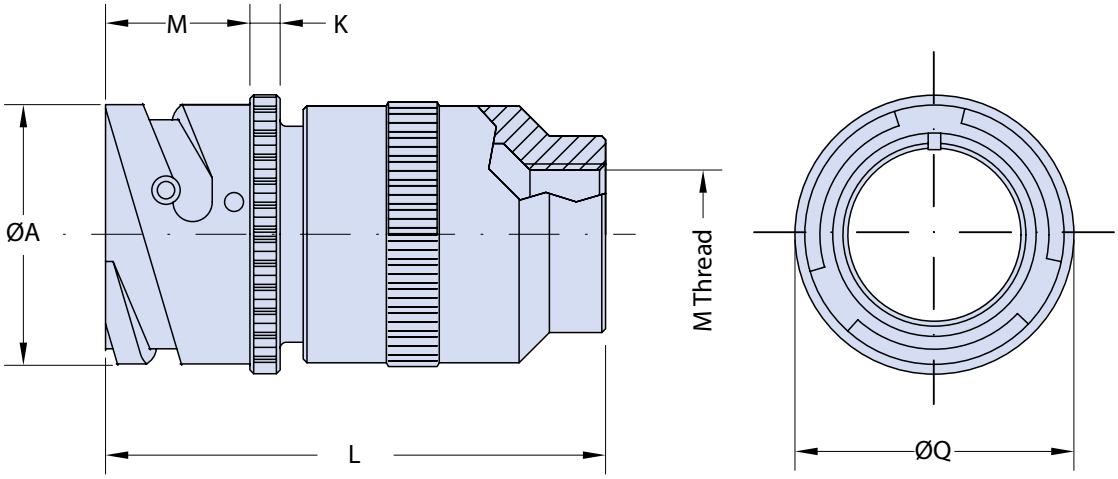

Application Notes

1. In-line cylindrical receptacle with backshell for use with metric cable glands (not included).
2. Connector/Backshell Class "A" (non-environmental)—Not supplied with wire sealing grommet; Class "R" (environmental)—Supplied with grommet.
3. Standard materials configuration consists of aluminum alloy. For platings, see TABLE II finish options.
4. Standard contact material consists of copper alloy with silver plating or gold plating.

© 2015 Glenair, Inc. U.S. CAGE Code 06324 Printed in Italy

Downloaded from Arrow.com.

ITS 3101 A FM and ITS 3101 R FM
ITS 4101 A FM and ITS 4101 R FM
In-Line Cylindrical Receptacle Assembly
with Backshell for Use with Metric Cable Glands

TABLE I: DIMENSIONS

Shell Size	ØA +0.2 -0.1	K ±0.2	L Max.	M +0.4 -0	M Thread Other M Threads available on request	ØQ ±0.1
10 SL	18.2	2.8	52.0	14.2	M12X1,5	21.8
14 S	24.5	3.2	54.5	14.2	M16X1,5	28.8
16 S	27.2	3.2	54.5	14.2	M16X1,5	30.5
16	27.2	3.2	70.0	19.0	M16X1,5	30.5
18	30.7	4.0	71.0	19.0	M20X1,5	33.8
20	34.0	4.0	71.5	19.0	M25X1,5	36.9
22	37.3	4.0	71.5	19.0	M25X1,5	39.5
24	40.9	4.0	71.5	20.6	M32X1,5	43.9
28	46.7	4.0	71.5	20.6	M32X1,5	48.4
32	53.4	4.0	84.0	22.2	M36X1,5	56.0
36	59.6	4.0	109.0	22.2	M40X1,5	62.4
40	65.5	4.0	109.0	22.2	M40X1,5	68.6

TABLE II: MODIFICATION CODES

STANDARD MATERIAL AND FINISH (*)		
Sym	**Description**	**RoHS**
	Omit for Aluminum/ Cadmium Olive Drab	
F6	Aluminum/ Black Electrodeposited Paint	✓
F7	Aluminum/ Black Zinc Nickel	✓
F11	Aluminum/ Electroless Nickel	✓
MB	Marine Bronze/ Unplated	✓
FK	Stainless Steel/ Passivate	✓

TABLE III

ELASTOMER OPTIONS	
Sym	**Description**
	Omit for Polychloroprene Elastomer
FR	Fire Resistant Elastomer
S	Silicone Elastomer

TABLE IV: MODIFICATION CODES

CONTACT OPTIONS	
Sym	**Description**
B0	Connector without Contacts**
B1	Connector with Gold Plated Contacts
Omit for standard version (Silver plated)	

(*) For further options, please contact the factory.

(**) Crimp Contacts Only

© 2015 Glenair, Inc. U.S. CAGE Code 06324 Printed in Italy

Downloaded from Arrow.com.

ITS 3101 A PHM and ITS 3101 R PHM
ITS 4101 A PHM and ITS 4101 R PHM
In-Line Cylindrical Receptacle Assembly with Environmental PHM Backshell

XX	ITS	31	01	A	20-27	P	Y	XX	PHM11	XXX
Elastomer Option (See Table III)	Reverse Bayonet Coupling *ITS* - Alumium Shell with Stainless Steel Studs *ITB* - Marine Bronze or Stainless Steel Shell without Stainless Steel Studs For further details, see diagram on page A-38	Contact Type *31* - Solder *41* - Crimp	*01* - In-Line	Connector/Backshell Class *A* - Non-Environmental; Supplied with Backshell Only *R* - Environmental; Supplied with Backshell and Grommet	Shell Size and Insert Arrangement (See Section A)	Contact Gender *P* - Pin *S* - Socket	Alternate Insert Rotation (W, X, Y, Z) Omit for Normal (See Section A)	Contact Options (See Table IV)	PHM Size (See Table I)	Mod Code Option (See Table II)

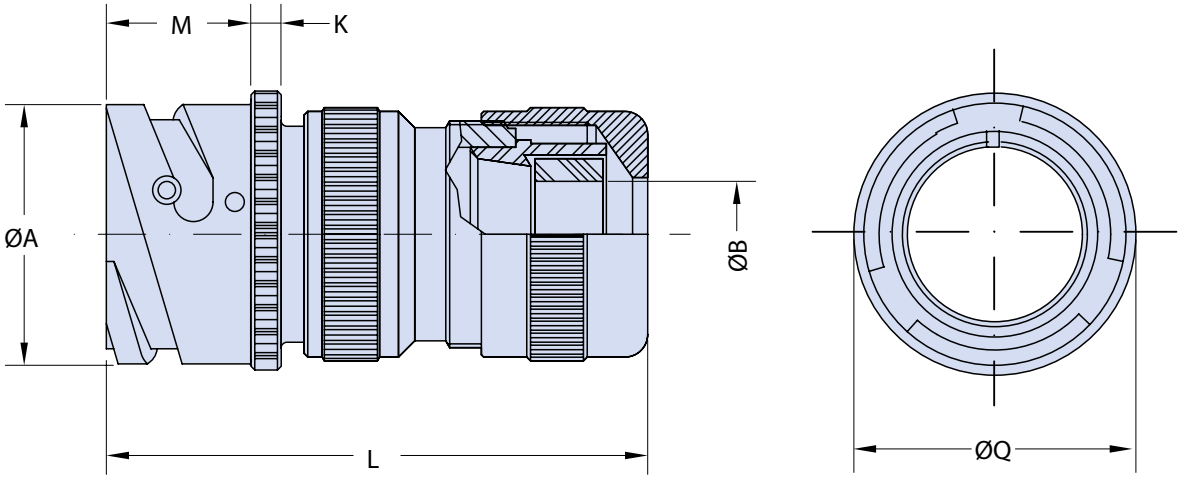

Application Notes

1. In-line cylindrical receptacle with rear-end for environmental PHM backshell.
2. Connector/Backshell Class "A" (non-environmental)—Not supplied with wire sealing grommet; Class "R" (environmental)—Supplied with grommet.
3. Standard materials configuration consists of aluminum alloy. For platings, see TABLE II finish options.
4. Standard contact material consists of copper alloy with silver plating or gold plating.

© 2015 Glenair, Inc. U.S. CAGE Code 06324 Printed in Italy

Downloaded from Arrow.com.

ITS 3101 A PHM and ITS 3101 R PHM
ITS 4101 A PHM and ITS 4101 R PHM
In-Line Cylindrical Receptacle Assembly with Environmental PHM Backshell

TABLE I: DIMENSIONS

Shell Size	PHM Size	ØA +0.2 -0.1	ØB Min. - Max.	K ±0.2	L Max.	M +0.4 -0	ØQ ±0.1
10 SL	9	18.2	2 - 9	2.8	64.0	14.2	21.8
14 S	11	24.5	2 - 11	3.2	66.5	14.2	28.8
16 S	11	27.2	2 - 11	3.2	66.5	14.2	30.5
16	11	27.2	2 - 11	3.2	77.0	19.0	30.5
18	11 / 18	30.7	2 - 11 / 2 - 16.5	4.0	78.0	19.0	33.8
20	11 / 18	34.0	2 - 11 / 2 - 16.5	4.0	78.0	19.0	36.9
22	18	37.3	2 - 16.5	4.0	78.5	19.0	39.5
24	18 / 22 / 24	40.9	2 - 16.5 / 15 - 20 / 19 - 24	4.0	83.5	20.6	43.9
28	18 / 22 / 24	46.7	2 - 16.5 / 15 - 20 / 19 - 24	4.0	89.5	20.6	48.4
32	22 / 24	53.4	15 - 20 / 19 - 24	4.0	94.5	22.2	56.0
36	35	59.6	23 - 35	4.0	106.0	22.2	62.4
40	35	65.5	23 - 35	4.0	106.0	22.2	68.6

TABLE II: MODIFICATION CODES

STANDARD MATERIAL AND FINISH (*)		
Sym	**Description**	**RoHS**
	Omit for Aluminum/ Cadmium Olive Drab	
F6	Aluminum/ Black Electrodeposited Paint	✓
F7	Aluminum/ Black Zinc Nickel	✓
F11	Aluminum/ Electroless Nickel	✓
MB	Marine Bronze/ Unplated	✓
FK	Stainless Steel/ Passivate	✓

TABLE III

ELASTOMER OPTIONS	
Sym	**Description**
	Omit for Polychloroprene Elastomer
FR	Fire Resistant Elastomer
S	Silicone Elastomer

TABLE IV: MODIFICATION CODES

CONTACT OPTIONS	
Sym	**Description**
B0	Connector without Contacts**
B1	Connector with Gold Plated Contacts
Omit for standard version (Silver plated)	

(*) For further options, please contact the factory.

(**) Crimp Contacts Only

© 2015 Glenair, Inc. U.S. CAGE Code 06324 Printed in Italy

Downloaded from Arrow.com.

ITS 3101 A PHM-EMI67 and ITS 4101 A PHM-EMI67
In-Line Cylindrical Receptacle Assembly
with EMI/RFI PHM Backshell

Elastomer Option (See Table III)	Contact Type *31* - Solder *41* - Crimp	Connector/Backshell Class *A* - Non-Environmental; Supplied with Backshell Only	Alternate Insert Rotation (W, X, Y, Z) Omit for Normal (See Section A)	Mod Code Option (See Table II)

XX	ITS	31	01	A	20-27	P	Y	XX	PHM18EMI67	XXX

Reverse Bayonet Coupling *ITS* - Alumium Shell with Stainless Steel Studs *ITB* - Marine Bronze or Stainless Steel Shell without Stainless Steel Studs For further details, see diagram on page A-38	*01* - In-Line	Shell Size and Insert Arrangement (See Section A)	Contact Gender *P* - Pin *S* - Socket	Contact Options (See Table IV)	PHM Size (See Table I)

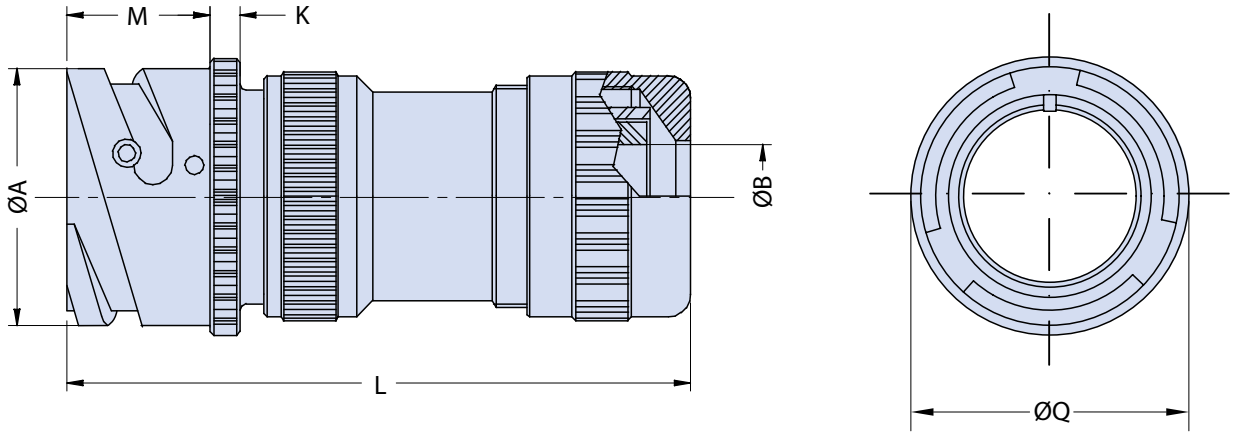

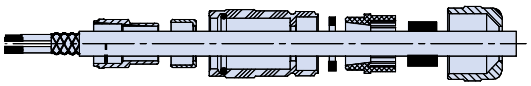

Exploded View

Application Notes

1. In-line receptacle with an EMI/RFI PHM backshell.
2. Connector/Backshell Class "A" (non-environmental)—Wire sealing grommet not supplied.
3. Standard materials configuration consists of aluminum alloy. For platings, see TABLE II finish options.
4. Standard contact material consists of copper alloy with silver plating or gold plating.

© 2015 Glenair, Inc. U.S. CAGE Code 06324 Printed in Italy

Downloaded from Arrow.com.

ITS 3101 A PHM-EMI67 and ITS 4101 A PHM-EMI67
In-Line Cylindrical Receptacle Assembly
with EMI/RFI PHM Backshell

Glenair®

TABLE I: DIMENSIONS

Shell Size	PHM Size	ØA +0.2 -0.1	ØB Min. - Max.	K ±0.2	L Max.	M +0.4 -0	ØQ ±0.1
10 SL	9	18.2	2 - 9	2.8	74.0	14.2	21.8
14 S	11	24.5	2 - 11	3.2	88.5	14.2	28.8
16 S	11	27.2	2 - 11	3.2	88.5	14.2	30.5
16	11	27.2	2 - 11	3.2	98.0	19.0	30.5
18	11/18	30.7	2 - 11/ 2 - 16.5	4.0	100.5	19.0	33.8
20	11/18	34.0	2 - 11/ 2 - 16.5	4.0	101.0	19.0	36.9
22	18	37.3	2 - 16.5	4.0	101.5	19.0	39.5
24	18/22	40.9	2 - 16.5 /15 - 20	4.0	104.5	20.6	43.9
28	22	46.7	15 - 20	4.0	109.5	20.6	48.4
32	24	53.4	19 - 24	4.0	112.0	22.2	56.0
36	35	59.6	23 - 35	4.0	118.0	22.2	62.4
40	35	65.5	23 - 35	4.0	118.0	22.2	68.6

TABLE II: MODIFICATION CODES

STANDARD MATERIAL AND FINISH (*)		
Sym	**Description**	**RoHS**
	Omit for Aluminum/ Cadmium Olive Drab	
F7	Aluminum/ Black Zinc Nickel	✓
F11	Aluminum/ Electroless Nickel	✓
MB	Marine Bronze/ Unplated	✓
FK	Stainless Steel/ Passivate	✓

TABLE III

ELASTOMER OPTIONS	
Sym	**Description**
	Omit for Polychloroprene Elastomer
FR	Fire Resistant Elastomer
S	Silicone Elastomer

TABLE IV: MODIFICATION CODES

CONTACT OPTIONS	
Sym	**Description**
B0	Connector without Contacts**
B1	Connector with Gold Plated Contacts
Omit for standard version (Silver plated)	

(*) For further options, please contact the factory.

(**) Crimp Contacts Only

© 2015 Glenair, Inc. U.S. CAGE Code 06324 Printed in Italy

Downloaded from Arrow.com.

ITS 3101 F and ITS 4101 F
In-Line Cylindrical Receptacle Assembly
with Class A IT3057 Cable Clamp and Polychloroprene Bushing

XX	ITS	31	01	F	20-27	P	Y	XXX

- **XX** — Elastomer Option (See Table III)
- **ITS** — Reverse Bayonet Coupling
  ITS - Alumium Shell with Stainless Steel Studs
  ITB - Marine Bronze or Stainless Steel Shell without Stainless Steel Studs
  For further details, see diagram on page A-38
- **31** — Contact Type
  31 - Solder
  41 - Crimp
- **01** — *01* - In-Line
- **F** — Connector/Backshell Class
  F - Environmental; Supplied with Grommet, Cable Clamp and Polychloroprene Bushing
- **20-27** — Shell Size and Insert Arrangement (See Section A)
- **P** — Contact Gender
  P - Pin
  S - Socket
- **Y** — Alternate Insert Rotation (W, X, Y, Z) Omit for Normal (See Section A)
- **XXX** — Mod Code Option (See Table II)

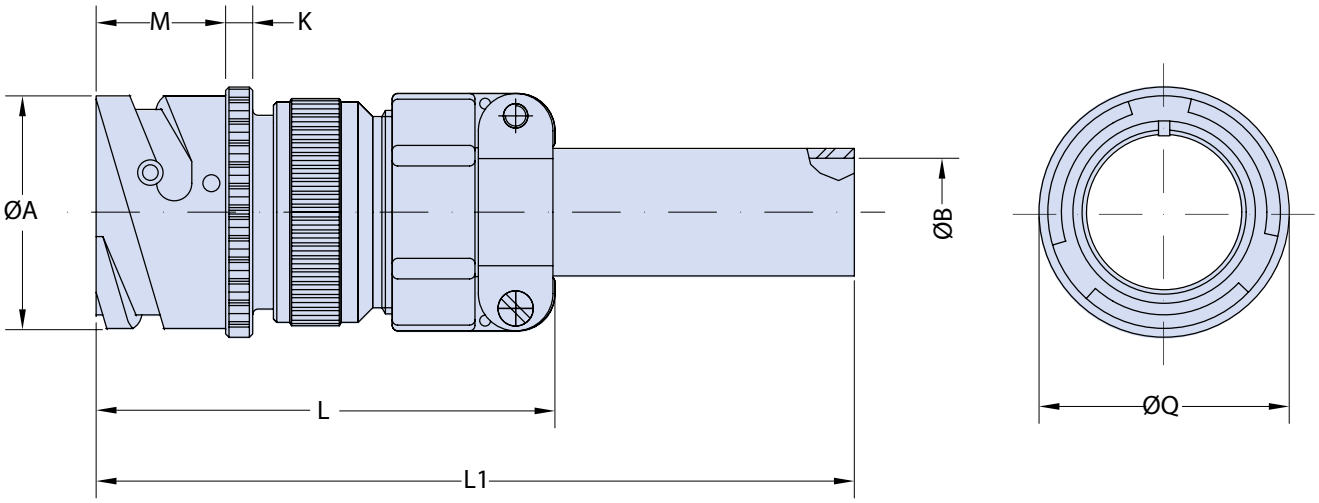

Application Notes

1. In-Line receptacle with an insulating grommet, environmental backshell, class A IT3057 cable clamp for individual wires and polychloroprene bushing.
2. Connector/Backshell Class "F" (environmental)—Wire sealing grommet supplied.
3. Standard materials configuration consists of aluminum alloy. For platings, see TABLE II finish options.
4. Standard contact material consists of copper alloy with silver plating or gold plating.

© 2015 Glenair, Inc. U.S. CAGE Code 06324 Printed in Italy

Downloaded from Arrow.com.

ITS 3101 F and ITS 4101 F
In-Line Cylindrical Receptacle Assembly
with Class A IT3057 Cable Clamp and Polychloroprene Bushing

TABLE I: DIMENSIONS

Shell Size	ØA +0.2 -0.1	ØB ±0.1	K ±0.2	L Max.	L1 Max.	M +0.4 -0	ØQ ±0.1
10 SL	18.2	5.58	2.8	56.0	114.0	14.2	21.8
14 S	24.5	7.92	3.2	60.0	114.0	14.2	28.8
16 S	27.2	11.09	3.2	61.5	114.0	14.2	30.5
16	27.2	11.09	3.2	72.0	120.5	19.0	30.5
18	30.7	14.27	4.0	73.0	120.5	19.0	33.8
20	34.0	15.87	4.0	73.0	120.5	19.0	36.9
22	37.3	15.87	4.0	73.5	120.5	19.0	39.5
24	40.9	19.05	4.0	77.0	120.5	20.6	43.9
28	46.7	19.05	4.0	83.0	120.5	20.6	48.4
32	53.4	23.79	4.0	88.0	122.5	22.2	56.0
36	59.6	31.75	4.0	94.5	124.5	22.2	62.4
40	65.5	34.92	4.0	108.5	124.5	22.2	68.6

TABLE II: MODIFICATION CODES

CONTACT OPTIONS		
Sym	**Description**	
B0	Connector without Contacts**	
B1	Connector with Gold Plated Contacts	
Omit for standard version (Silver plated)		
STANDARD MATERIAL AND FINISH (*)		
Sym	**Description**	**RoHS**
	Omit for Aluminum/ Cadmium Olive Drab	
F6	Aluminum/ Black Electrodeposited Paint	✓
F7	Aluminum/ Black Zinc Nickel	✓
F11	Aluminum/ Electroless Nickel	✓

(*) For further options, please contact the factory.

(**) Crimp Contacts Only

TABLE III

ELASTOMER OPTIONS	
Sym	**Description**
	Omit for Polychloroprene Elastomer
FR	Fire Resistant Elastomer
S	Silicone Elastomer

© 2015 Glenair, Inc. U.S. CAGE Code 06324 Printed in Italy

Downloaded from Arrow.com.

ITS 3101 A N5 and ITS 3101 R N5
ITS 4101 A N5 and ITS 4101 R N5
In-Line Cylindrical Receptacle Assembly
with Class C (Environmental) IT3057 Cable Clamp

XX	ITS	31	01	A	20-27	P	Y	XX	N5	XXX

- **XX** — Elastomer Option (See Table III)
- **ITS** — Reverse Bayonet Coupling
  ITS - Alumium Shell with Stainless Steel Studs
  ITB - Marine Bronze or Stainless Steel Shell without Stainless Steel Studs
  For further details, see diagram on page A-38
- **31** — Contact Type
  31 - Solder
  41 - Crimp
- **01** — *01* - In-Line
- **A** — Connector/Backshell Class
  A - Non-Environmental; Supplied with Backshell Only
  R - Environmental; Supplied with Backshell and Grommet
- **20-27** — Shell Size and Insert Arrangement (See Section A)
- **P** — Contact Gender
  P - Pin
  S - Socket
- **Y** — Alternate Insert Rotation (W, X, Y, Z) Omit for Normal (See Section A)
- **XX** — Contact Options (See Table IV)
- **N5** — Class "C" Environmental Cable Clamp
- **XXX** — Mod Code Option (See Table II)

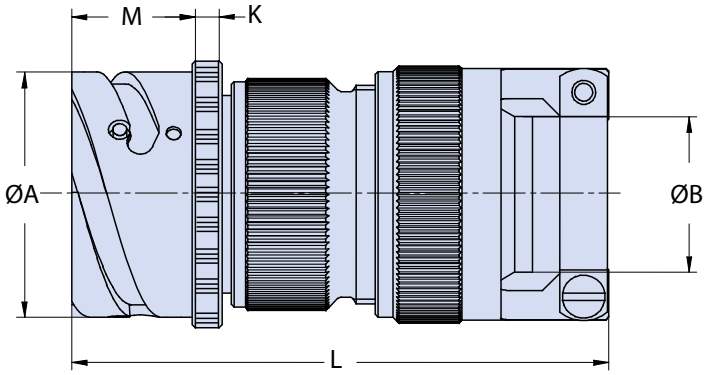

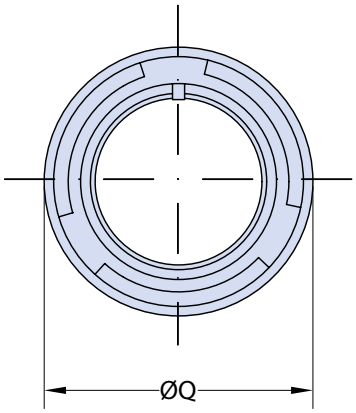

Application Notes

1. In-line receptacle with a class C (environmental) IT3057 cable clamp for use with jacketed cable.
2. Connector/Backshell Class "A" (non-environmental)—Not supplied with wire sealing grommet; Class "R" (environmental)—Supplied with grommet.
3. Standard materials configuration consists of aluminum alloy. For platings, see TABLE II finish options.
4. Standard contact material consists of copper alloy with silver plating or gold plating.

© 2015 Glenair, Inc. U.S. CAGE Code 06324 Printed in Italy

Downloaded from Arrow.com.

ITS 3101 A N5 and ITS 3101 R N5
ITS 4101 A N5 and ITS 4101 R N5
In-Line Cylindrical Receptacle Assembly
with Class C (Environmental) IT3057 Cable Clamp

TABLE I: DIMENSIONS

Shell Size	ØA +0.2 -0.1	ØB		K ±0.2	L Max.	M +0.4 -0	ØQ ±0.1
		Open	Closed				
10 SL	18.2	7.93	2.38	2.8	73.0	14.2	21.8
14 S	24.5	11.12	5.84	3.2	76.0	14.2	28.8
16 S	27.2	13.48	8.00	3.2	73.0	14.2	30.5
16	27.2	13.48	8.00	3.2	84.0	19.0	30.5
18	30.7	15.87	9.60	4.0	88.0	19.0	33.8
20	34.0	19.00	11.30	4.0	90.0	19.0	36.9
22	37.3	19.00	11.30	4.0	89.0	19.0	39.5
24	40.9	23.80	15.50	4.0	95.0	20.6	43.9
28	46.7	23.80	15.50	4.0	103.0	20.6	48.4
32	53.4	31.75	23.40	4.0	111.0	22.2	56.0
36	59.6	35.00	23.40	4.0	123.0	22.2	62.4
40	65.5	41.25	29.90	4.0	123.0	22.2	68.6

TABLE II: MODIFICATION CODES

STANDARD MATERIAL AND FINISH (*)		
Sym	**Description**	**RoHS**
	Omit for Aluminum/ Cadmium Olive Drab	
F6	Aluminum/ Black Electrodeposited Paint	✓
F7	Aluminum/ Black Zinc Nickel	✓
F11	Aluminum/ Electroless Nickel	✓
MB	Marine Bronze/ Unplated	✓
FK	Stainless Steel/ Passivate	✓

TABLE III

ELASTOMER OPTIONS	
Sym	**Description**
	Omit for Polychloroprene Elastomer
FR	Fire Resistant Elastomer
S	Silicone Elastomer

TABLE IV: MODIFICATION CODES

CONTACT OPTIONS	
Sym	**Description**
B0	Connector without Contacts**
B1	Connector with Gold Plated Contacts
Omit for standard version (Silver plated)	

(*) For further options, please contact the factory.

(**) Crimp Contacts Only

© 2015 Glenair, Inc. U.S. CAGE Code 06324 Printed in Italy

Downloaded from Arrow.com.

ITS 3101 G and ITS 4101 G
In-Line Cylindrical Receptacle Assembly
with Environmental Backshell for Heat Shrink Tubing

XX	ITS	31	01	G	20-27	P	Y	XXX

- **XX** — Elastomer Option (See Table III)
- **ITS** — Reverse Bayonet Coupling
  ITS - Alumium Shell with Stainless Steel Studs
  ITB - Marine Bronze or Stainless Steel Shell without Stainless Steel Studs
  For further details, see diagram on page A-38
- **31** — Contact Type
  31 - Solder
  41 - Crimp
- **01** — *01* - In-Line
- **G** — Connector/Backshell Class
  G - Environmental; Supplied with Gromme and Backshell for Heat Shrink Tubing
- **20-27** — Shell Size and Insert Arrangement (See Section A)
- **P** — Contact Gender
  P - Pin
  S - Socket
- **Y** — Alternate Insert Rotation (W, X, Y, Z) Omit for Normal (See Section A)
- **XXX** — Mod Code Option (See Table II)

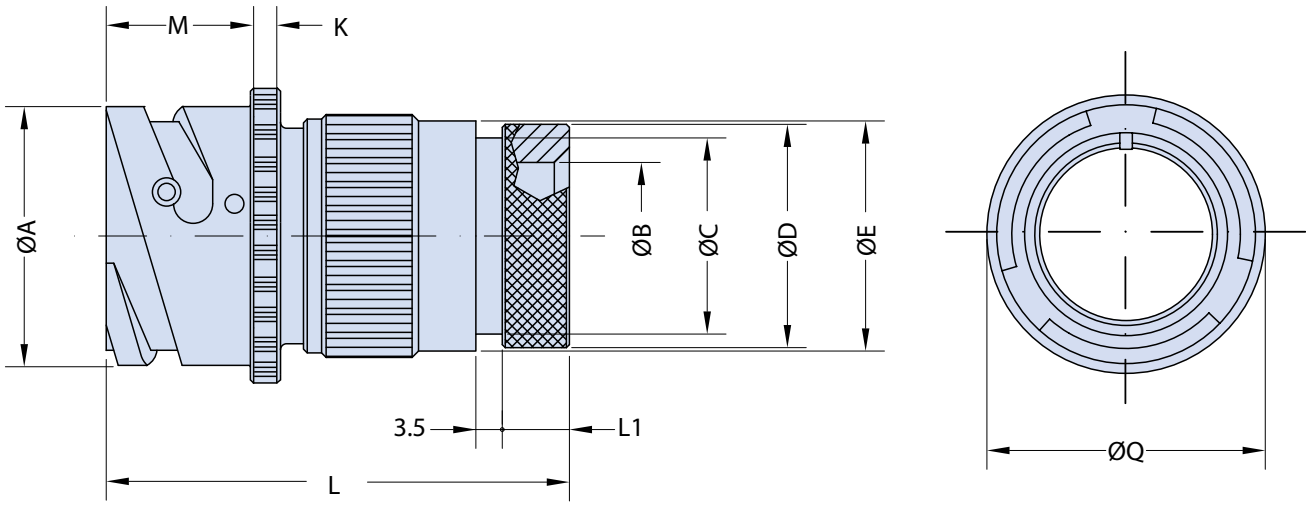

Application Notes

1. In-Line receptacle with backshell for heat shrink tubing.
2. Connector/Backshell Class "G" (environmental)—Wire sealing grommet supplied.
3. Standard materials configuration consists of aluminum alloy. For platings, see TABLE II finish options.
4. Standard contact material consists of copper alloy with silver plating or gold plating.

© 2015 Glenair, Inc. U.S. CAGE Code 06324 Printed in Italy

Downloaded from Arrow.com.

ITS 3101 G and ITS 4101 G
In-Line Cylindrical Receptacle Assembly
with Environmental Backshell for Heat Shrink Tubing

Glenair®

TABLE I: DIMENSIONS

Shell Size	ØA +0.2 -0.1	ØB Min.	ØC ±0.1	ØD ±0.2	ØE ±0.2	K ±0.2	L Max.	L1 Max.	M +0.4 -0	ØQ ±0.1
10 SL	18.2	8.5	13.0	15.5	17.0	2.8	53.0	8.2	14.2	21.8
14 S	24.5	12.0	16.5	19.1	20.1	3.2	53.5	8.2	14.2	28.8
16 S	27.2	14.5	21.5	23.9	23.5	3.2	53.5	8.2	14.2	30.5
16	27.2	14.5	21.5	23.9	23.5	3.2	65.5	8.0	19.0	30.5
18	30.7	17.5	21.7	23.9	26.5	4.0	66.0	8.0	19.0	33.8
20	34.0	19.5	26.0	29.6	30.5	4.0	66.5	8.9	19.0	36.9
22	37.3	22.0	26.0	29.6	33.6	4.0	66.5	8.9	19.0	39.5
24	40.9	25.0	34.5	37.8	36.1	4.0	66.5	9.2	20.6	43.9
28	46.7	29.0	34.5	37.8	41.4	4.0	66.5	9.2	20.6	48.4
32	53.4	34.0	43.6	47.8	48.6	4.0	84.0	11.7	22.2	56.0
36	59.6	38.5	43.6	47.8	54.8	4.0	84.0	11.7	22.2	62.4
40	65.5	48.0	51.5	52.4	60.9	4.0	84.0	11.7	22.2	68.6

TABLE II: MODIFICATION CODES

CONTACT OPTIONS		
Sym	**Description**	
B0	Connector without Contacts**	
B1	Connector with Gold Plated Contacts	
Omit for standard version (Silver plated)		
STANDARD MATERIAL AND FINISH (*)		
Sym	**Description**	**RoHS**
	Omit for Aluminum/ Cadmium Olive Drab	
F6	Aluminum/ Black Electrodeposited Paint	✓
F7	Aluminum/ Black Zinc Nickel	✓
F11	Aluminum/ Electroless Nickel	✓
MB	Marine Bronze/ Unplated	✓
FK	Stainless Steel/ Passivate	✓

(*) For further options, please contact the factory.

(**) Crimp Contacts Only

TABLE III

ELASTOMER OPTIONS	
Sym	**Description**
	Omit for Polychloroprene Elastomer
FR	Fire Resistant Elastomer
S	Silicone Elastomer

© 2015 Glenair, Inc.

Downloaded from Arrow.com.

ITS 3101 GR and ITS 4101 GR
In-Line Cylindrical Receptacle Assembly
with Rotating Coupling Nut Backshell for Heat-Shrink Tubing

XX	ITS	31	01	GR	20-27	P	Y	XXX

- **XX** — Elastomer Option (See Table III)
- **ITS** — Reverse Bayonet Coupling
  ITS - Alumium Shell with Stainless Steel Studs
  ITB - Marine Bronze or Stainless Steel Shell without Stainless Steel Studs
  For further details, see diagram on page A-38
- **31** — Contact Type
  31 - Solder
  41 - Crimp
- **01** — *01* - In-Line
- **GR** — Connector/Backshell Class
  GR - Environmental; Supplied with Backshell for Heat Shrink Tubing and Rotating Clamp Nut
- **20-27** — Shell Size and Insert Arrangement (See Section A)
- **P** — Contact Gender
  P - Pin
  S - Socket
- **Y** — Alternate Insert Rotation (W, X, Y, Z) Omit for Normal (See Section A)
- **XXX** — Mod Code Option (See Table II)

B

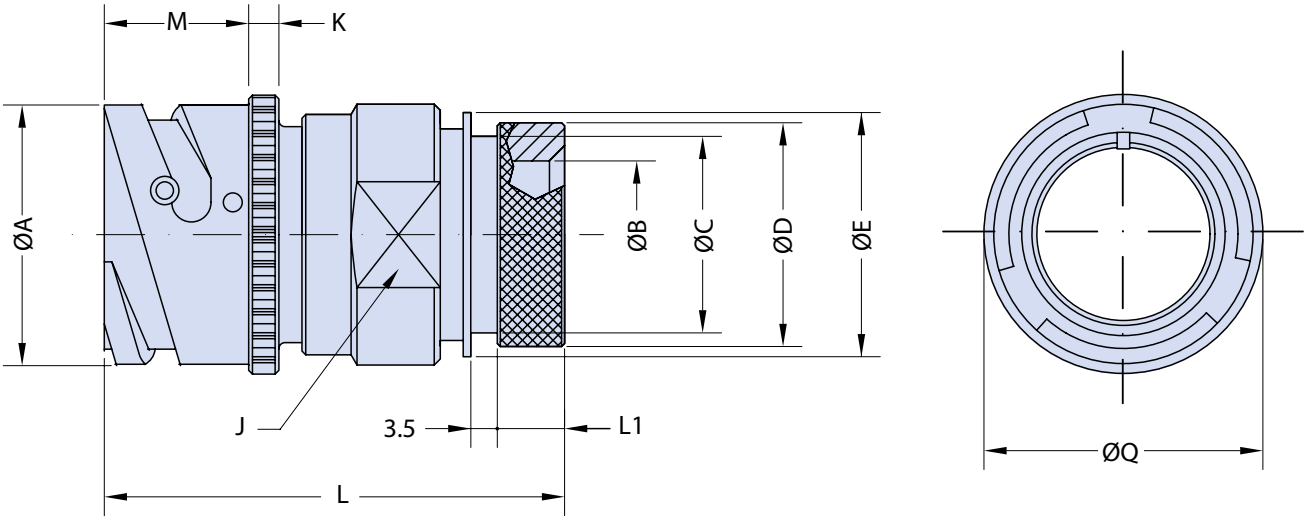

Application Notes

1. In-line receptacle assembly with backshell for heat shrink tubing. Rotating coupling nut supplied.
2. Connector/Backshell Class "GR" (environmental)—wire sealing grommet supplied.
3. Standard materials configuration consists of aluminum alloy. For platings, see TABLE II finish options.
4. Standard contact material consists of copper alloy with silver plating or gold plating.

© 2015 Glenair, Inc. U.S. CAGE Code 06324 Printed in Italy

Downloaded from Arrow.com.

ITS 3101 GR and ITS 4101 GR
In-Line Cylindrical Receptacle Assembly
with Rotating Coupling Nut Backshell for Heat-Shrink Tubing

Glenair®

TABLE I: DIMENSIONS

Shell Size	ØA +0.2 -0.1	ØB Min.	ØC ±0.1	ØD ±0.2	ØE ±0.1	J Key	K ±0.2	L Max.	L1 ±0.1	M +0.4 -0	ØQ ±0.1
10 SL	18.2	8.6	13.0	15.5	17.0	20	2.8	55.0	8.2	14.2	21.8
14 S	24.5	10.7	16.5	19.1	20.1	23	3.2	55.0	8.2	14.2	28.8
16 S	27.2	14.0	24.9	23.9	23.5	26	3.2	55.0	8.0	14.2	30.5
16	27.2	14.0	24.9	23.9	23.5	26	3.2	61.0	8.0	19.0	30.5
18	30.7	17.5	21.7	23.9	26.5	28	4.0	64.5	8.0	19.0	33.8
20	34.0	18.8	26.2	29.6	30.2	32	4.0	64.5	8.9	19.0	36.9
22	37.3	21.0	26.2	29.6	33.6	36	4.0	64.5	9.2	19.0	39.5
24	40.9	25.4	34.0	37.8	36.1	39	4.0	68.5	9.5	20.6	43.9
28	46.7	28.4	34.3	37.8	41.4	46	4.0	68.5	9.2	20.6	48.4
32	53.4	34.0	43.6	47.8	48.6	52	4.0	70.0	11.7	22.2	56.0
36	59.6	40.5	43.6	47.8	54.0	58	4.0	70.0	11.5	22.2	62.4
40	65.5	49.0	52.6	57.8	61.0	65	4.0	70.0	11.5	22.2	68.6

TABLE II: MODIFICATION CODES

CONTACT OPTIONS		
Sym	**Description**	
B0	Connector without Contacts**	
B1	Connector with Gold Plated Contacts	
Omit for standard version (Silver plated)		
STANDARD MATERIAL AND FINISH (*)		
Sym	**Description**	**RoHS**
	Omit for Aluminum/ Cadmium Olive Drab	
F6	Aluminum/ Black Electrodeposited Paint	✓
F7	Aluminum/ Black Zinc Nickel	✓
F11	Aluminum/ Electroless Nickel	✓
MB	Marine Bronze/ Unplated	✓
FK	Stainless Steel/ Passivate	✓

(*) For further options, please contact the factory.

(**) Crimp Contacts Only

TABLE III

ELASTOMER OPTIONS	
Sym	**Description**
	Omit for Polychloroprene Elastomer
FR	Fire Resistant Elastomer
S	Silicone Elastomer

© 2015 Glenair, Inc. U.S. CAGE Code 06324 Printed in Italy

Downloaded from Arrow.com.

ITS 3101 RS and ITS 4101 RS
In-Line Cylindrical Receptacle Assembly
with Lipped Backshell

XX	ITS	31	01	RS	20-27	P	Y	XXX

- **XX** — Elastomer Option (See Table III)
- **ITS** — Reverse Bayonet Coupling
  ITS - Alumium Shell with Stainless Steel Studs
  ITB - Marine Bronze or Stainless Steel Shell without Stainless Steel Studs
  For further details, see diagram on page A-38
- **31** — Contact Type
  31 - Solder
  41 - Crimp
- **01** — *01 - In-Line*
- **RS** — Connector/Backshell Class
  RS - Environmental; Supplied with Grommet and Lipped Backshell
- **20-27** — Shell Size and Insert Arrangement (See Section A)
- **P** — Contact Gender
  P - Pin
  S - Socket
- **Y** — Alternate Insert Rotation (W, X, Y, Z) Omit for Normal (See Section A)
- **XXX** — Mod Code Option (See Table II)

B

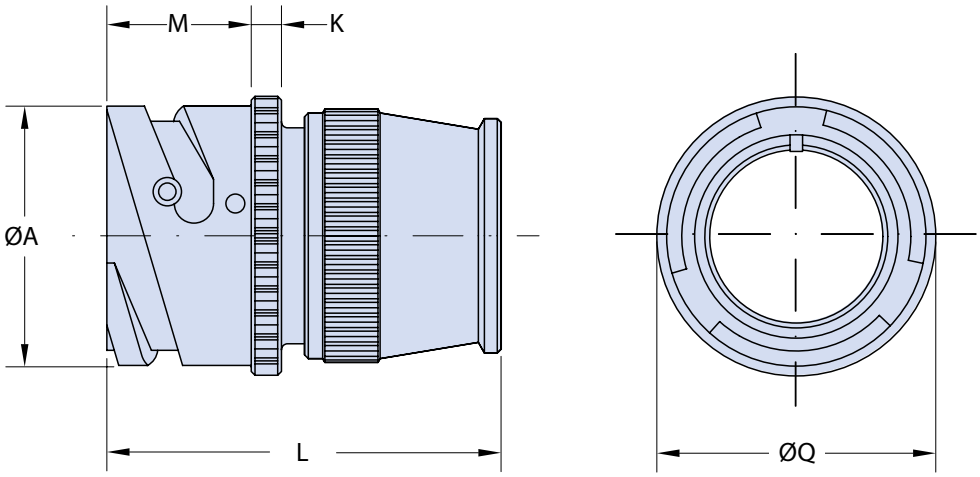

Application Notes

1. In-line receptacle with a wire sealing grommet and backshell for use with individual wire assemblies.
2. Connector/Backshell Class "RS" (environmental)—Wire sealing grommet supplied.
3. Standard materials configuration consists of aluminum alloy. For platings, see TABLE II finish options.
4. Standard contact material consists of copper alloy with silver plating or gold plating.

© 2015 Glenair, Inc. U.S. CAGE Code 06324 Printed in Italy

Downloaded from Arrow.com.

ITS 3101 RS and ITS 4101 RS
In-Line Cylindrical Receptacle Assembly
with Lipped Backshell

Glenair®

TABLE I: DIMENSIONS

Shell Size	ØA +0.2 -0.1	K ±0.2	L Max.	M +0.4 -0	ØQ ±0.1
10 SL	18.2	2.8	44.0	14.2	21.8
14 S	24.5	3.2	48.5	14.2	28.8
16 S	27.2	3.2	48.5	14.2	30.5
16	27.2	3.2	56.5	19.0	30.5
18	30.7	4.0	57.0	19.0	33.8
20	34.0	4.0	57.0	19.0	36.9
22	37.3	4.0	58.0	19.0	39.5
24	40.9	4.0	58.5	20.6	43.9
28	46.7	4.0	58.5	20.6	48.4
32	53.4	4.0	60.5	22.2	56.0
36	59.6	4.0	60.5	22.2	62.4
40	65.5	4.0	60.5	22.2	68.6

TABLE II: MODIFICATION CODES

CONTACT OPTIONS		
Sym	**Description**	
B0	Connector without Contacts**	
B1	Connector with Gold Plated Contacts	
Omit for standard version (Silver plated)		
STANDARD MATERIAL AND FINISH (*)		
Sym	**Description**	**RoHS**
	Omit for Aluminum/ Cadmium Olive Drab	
F6	Aluminum/ Black Electrodeposited Paint	✓
F7	Aluminum/ Black Zinc Nickel	✓
F11	Aluminum/ Electroless Nickel	✓
MB	Marine Bronze/ Unplated	✓
FK	Stainless Steel/ Passivate	✓

(*) For further options, please contact the factory.

(**) Crimp Contacts Only

TABLE III

ELASTOMER OPTIONS	
Sym	**Description**
	Omit for Polychloroprene Elastomer
FR	Fire Resistant Elastomer
S	Silicone Elastomer

© 2015 Glenair, Inc.

Downloaded from Arrow.com.

ITS 3101 SP and ITS 4101 SP
In-Line Cylindrical Receptacle Assembly
with Environmental Backshell for EMI/RFI Shield Termination

XX	ITS	31	01	SP	20-27	P	Y	XXX

- **XX** — Elastomer Option (See Table III)
- **ITS** — Reverse Bayonet Coupling
  ITS - Alumium Shell with Stainless Steel Studs
  ITB - Marine Bronze or Marine Bronze or Stainless Steel Shell without Stainless Steel Studs
  For further details, see diagram on page A-38
- **31** — Contact Type
  31 - Solder
  41 - Crimp
- **01** — *01* - In-Line
- **SP** — Connector/Backshell Class
  SP - Environmental; Supplied with Grommet and EMI/RFI Backshell
- **20-27** — Shell Size and Insert Arrangement (See Section A)
- **P** — Contact Gender
  P - Pin
  S - Socket
- **Y** — Alternate Insert Rotation (W, X, Y, Z) Omit for Normal (See Section A)
- **XXX** — Mod Code Option (See Table II)

B

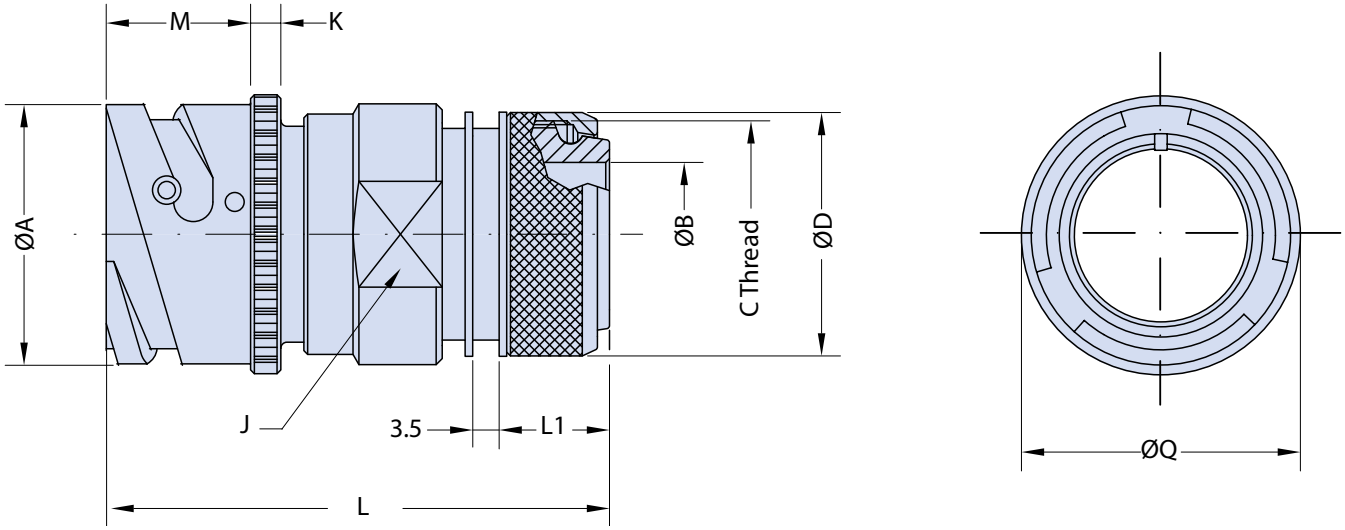

Application Notes

1. In-line receptacle with EMI/RFI shield termination backshell with rotating coupling nut. Cable shield is terminated with a "braid-trap" nut. Heat-shrink tubing may also be attached for additional environmental and mechanical protection.
2. Connector/Backshell Class "SP" (environmental)—Wire sealing grommet supplied.
3. Standard materials configuration consists of aluminum alloy. For platings, see TABLE II finish options.
4. Standard contact material consists of copper alloy with silver plating or gold plating.

© 2015 Glenair, Inc. U.S. CAGE Code 06324 Printed in Italy

Downloaded from Arrow.com.

ITS 3101 SP and ITS 4101 SP
In-Line Cylindrical Receptacle Assembly
with Environmental Backshell for EMI/RFI Shield Termination

TABLE I: DIMENSIONS

Shell Size	ØA +0.2 -0.1	ØB Min.	C Thread	ØD ±0.2	J Key	K ±0.2	L Max.	L1 Max.	M +0.4 -0	ØQ ±0.1
10 SL	18.2	8.6	M16X1	18.5	20	2.8	57.0	14.0	14.2	21.8
14 S	24.5	10.7	M20X1	22.3	23	3.2	57.0	14.0	14.2	28.8
16 S	27.2	13.9	M23X1	25.3	26	3.2	58.5	15.6	14.2	30.5
16	27.2	13.9	M23X1	25.3	26	3.2	67.5	15.6	19.0	30.5
18	30.7	15.0	M26X1	28.0	28	4.0	69.0	14.6	19.0	33.8
20	34.0	18.8	M30X1	32.3	32	4.0	69.0	14.6	19.0	36.9
22	37.3	22.0	M32X1	34.3	36	4.0	69.0	14.6	19.0	39.5
24	40.9	25.0	M36X1	38.3	39	4.0	70.5	14.6	20.6	43.9
28	46.7	28.4	M39X1	41.2	46	4.0	70.5	14.6	20.6	48.4
32	53.4	34.0	M45X1	48.3	52	4.0	72.0	14.6	22.2	56.0
36	59.6	40.5	M52X1	55.0	58	4.0	72.0	15.0	22.2	62.4
40	65.5	49.0	M59X1	62.0	65	4.0	72.0	15.5	22.2	68.6

TABLE II: MODIFICATION CODES

CONTACT OPTIONS		
Sym	**Description**	
B0	Connector without Contacts**	
B1	Connector with Gold Plated Contacts	
Omit for standard version (Silver plated)		
STANDARD MATERIAL AND FINISH (*)		
Sym	**Description**	**RoHS**
	Omit for Aluminum/ Cadmium Olive Drab	
F7	Aluminum/ Black Zinc Nickel	✓
F11	Aluminum/ Electroless Nickel	✓
MB	Marine Bronze/ Unplated	✓
FK	Stainless Steel/ Passivate	✓

(*) For further options, please contact the factory.

(**) Crimp Contacts Only

TABLE III

ELASTOMER OPTIONS	
Sym	**Description**
	Omit for Polychloroprene Elastomer
FR	Fire Resistant Elastomer
S	Silicone Elastomer

© 2015 Glenair, Inc.

Downloaded from Arrow.com.

ITS 3101 A ZL and ITS 3101 R ZL
ITS 4101 A ZL and ITS 4101 R ZL
In Line Cylindrical Receptacle Assembly
with BAND-IT Backshell

Elastomer Option (See Table V)	Contact Type	Connector/Backshell Class		Alternate Insert Rotation (W, X, Y, Z) Omit for Normal (See Section A)	BAND-IT Backshell
	31 - Solder *41* - Crimp	*A* - Non-Environmental; Supplied with Backshell Only	*R* - Environmental; Supplied with Backshell and Grommet		*ZLF* - Supplied with Metallic Band

XX	ITS	31	01	A	20-27	P	Y	XX	ZL	XX	XXX
	Reverse Bayonet Coupling *ITS* - Alumium Shell with Stainless Steel Studs *ITB* - Marine Bronze or Stainless Steel Shell without Stainless Steel Studs For further details, see diagram on page A-38		*01* - In-Line		Shell Size and Insert Arrangement (See Section A)	Contact Gender *P* - Pin *S* - Socket		Contact Options (See Table III)		Entry Size (See Table II)	Finish Options (See Table IV)

B

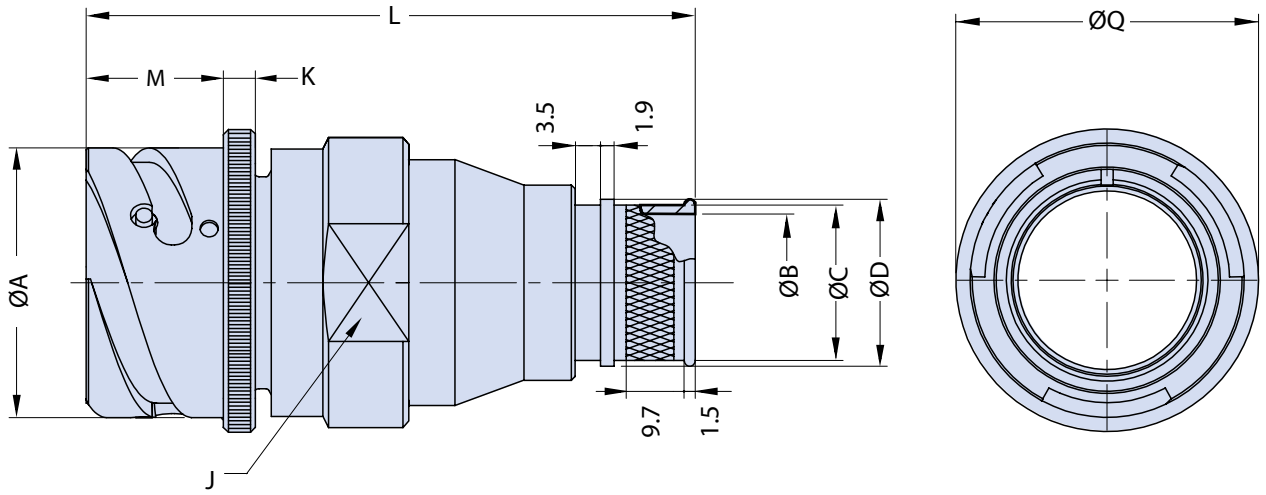

Application Notes

1. In-line receptacle with rear-end backshell for attachment of BAND-IT.
2. Connector/Backshell Class "A" (non-environmental)—Wire sealing grommet not supplied.
   Class "R" (environmental)—Supplied with grommet.
3. Standard materials configuration consists of aluminum alloy. For platings, see TABLE IV finish options.
4. Standard contact material consists of copper alloy with silver plating or gold plating.

© 2015 Glenair, Inc. U.S. CAGE Code 06324 Printed in Italy

Downloaded from Arrow.com.

ITS 3101 A ZL and ITS 3101 R ZL
ITS 4101 A ZL and ITS 4101 R ZL
In Line Cylindrical Receptacle Assembly
with BAND-IT Backshell

TABLE I: DIMENSIONS

Size	L Max.	M +0.4 -0	ØA +0.2 -0.1	ØQ Max.	J Key	K ±0.2	Entry Size [a]
10 SL	69.5	14.2	18.2	21.8	20	2.8	01÷06
14 S	70.0	14.2	24.5	28.8	23	3.2	03÷08
16 S	70.0	14.2	27.2	30.5	26	3.2	05÷10
16	79.0	19.0	27.2	30.5	26	3.2	05÷10
18	83.5	19.0	30.7	33.8	28	4.0	07÷12
20	94.0	19.0	34.0	36.9	32	4.0	09÷14
22	99.0	19.0	37.3	39.5	36	4.0	11÷16
24	101.0	20.6	40.9	43.9	39	4.0	12÷17
28	106.0	20.6	46.7	48.4	46	4.0	13÷19
32	112.5	22.2	53.4	56.0	52	4.0	17÷22
36	112.5	22.2	59.6	62.4	58	4.0	19÷23
40	117.5	22.2	65.5	68.6	65	4.0	21÷24

(a) For further entry size, please contact the factory.

TABLE II: ENTRY SIZE TABLE

Entry Size	ØB	ØC	ØD
01	3.2	6.4	7.9
02	4.8	7.9	9.5
03	6.4	9.5	11.1
04	7.9	11.1	12.7
05	9.5	12.7	14.3
06	11.1	14.3	15.8
07	12.7	15.9	17.4
08	14.3	17.5	19.1
09	15.9	19.1	20.6
10	17.5	20.6	22.2
11	19.1	22.2	23.8
12	20.6	23.8	25.4
13	22.2	25.4	27.0
14	23.8	27.0	28.5
15	25.4	28.6	30.1
16	27.0	30.2	31.8
17	28.6	31.8	33.3
18	31.8	34.9	36.5
19	34.9	38.1	39.7
20	38.1	41.3	42.8
21	41.3	44.5	46.0
22	44.5	47.6	49.2
23	47.6	50.8	52.4
24	50.8	54.0	55.5

TABLE III: MODIFICATION CODES

CONTACT OPTIONS	
Sym	**Description**
B0	Connector without Contacts**
B1	Connector with Gold Plated Contacts
Omit for standard version (Silver plated)	

TABLE IV: MODIFICATION CODES

STANDARD MATERIAL AND FINISH (*)		
Sym	**Description**	**RoHS**
	Omit for Aluminum/ Cadmium Olive Drab	
F7	Aluminum/ Black Zinc Nickel	✓
F11	Aluminum/ Electroless Nickel	✓
MB	Marine Bronze/ Unplated	✓
FK	Stainless Steel/ Passivate	✓

TABLE V

ELASTOMER OPTIONS	
Sym	**Description**
	Omit for Polychloroprene Elastomer
FR	Fire Resistant Elastomer
S	Silicone Elastomer

(*) For further options, please contact the factory.
(**) Crimp Contacts Only

© 2015 Glenair, Inc. U.S. CAGE Code 06324 Printed in Italy

Downloaded from Arrow.com.

ITS 3102 A and ITS 4102 A
ITS 3102 R and ITS 4102 R
Front Panel Mount Square Flange Receptacle
No Accessory Threads

Elastomer Option (See Table III)		Contact Type *31* - Solder *41* - Crimp		Connector Class *A* - General Duty *R* - Sealed Insulator		Contact Gender *P* - Pin *S* - Socket		Mod Code Option (See Table II)
XX	ITS	31	02	A	20-27	P	Y	XXX
	Reverse Bayonet Coupling *ITS* - Alumium Shell with Stainless Steel Studs *ITB* - Marine Bronze or Stainless Steel Shell without Stainless Steel Studs For further details, see diagram on page A-38		*02* - Front Wall Mount		Shell Size and Insert Arrangement (See Section A)		Alternate Insert Rotation (W, X, Y, Z) Omit for Normal (See Section A)	

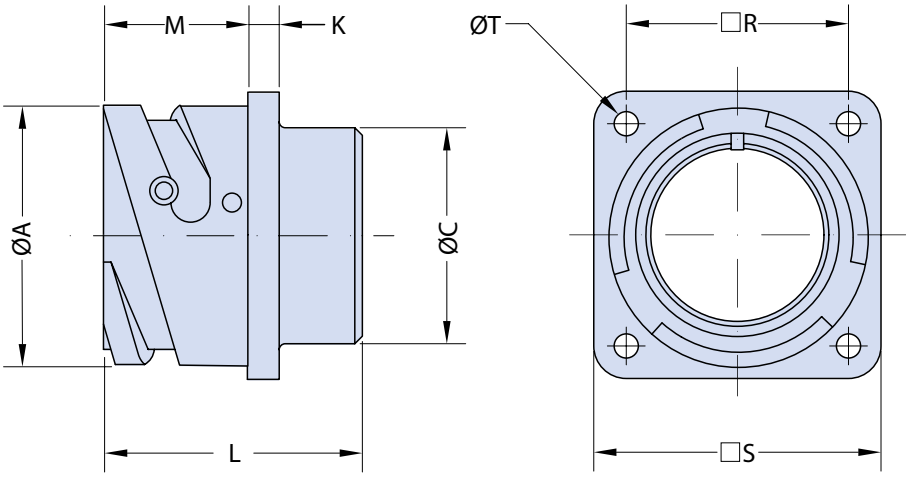

Application Notes

1. Front panel mount square flange receptacle—No Accessory threads. Through mounting holes.
2. Connector Class "A" (General Duty). Connector Class "R" (Sealed Insulator) only with solder contacts.
3. Standard materials configuration consists of aluminum alloy. For platings, see TABLE II finish options.
4. Standard contact material consists of copper alloy with silver plating or gold plating.

© 2015 Glenair, Inc. U.S. CAGE Code 06324 Printed in Italy

Downloaded from Arrow.com.

ITS 3102 A and ITS 4102 A
ITS 3102 R and ITS 4102 R
Front Panel Mount Square Flange Receptacle
No Accessory Threads

TABLE I: DIMENSIONS

Shell Size	ØA +0.2 -0.1	ØC Max.	K ±0.2	L Max.	M +0.4 -0	R ±0.2	S ±0.2	ØT +0.1 -0
10 SL	18.2	16.2	2.8	24.7	14.2	18.25	25.4	3.2
14 S	24.5	19.2	3.2	24.9	14.2	23.00	30.4	3.2
16 S	27.2	22.4	3.2	24.9	14.2	24.60	32.5	3.2
16	27.2	22.4	3.2	33.9	19.0	24.60	32.5	3.2
18	30.7	25.6	4.0	34.3	19.0	27.00	35.0	3.2
20	34.0	29.0	4.0	34.3	19.0	29.40	38.0	3.2
22	37.3	32.2	4.0	34.3	19.0	31.75	41.0	3.2
24	40.9	35.3	4.0	35.8	20.6	34.90	44.5	3.7
28	46.7	41.4	4.0	35.8	20.6	39.70	50.9	3.7
32	53.4	47.8	4.0	37.4	22.2	44.50	57.0	4.3
36	59.6	54.1	4.0	37.4	22.2	49.20	63.5	4.3
40	65.5	59.0	4.0	37.4	22.2	55.55	69.9	4.3

TABLE II: MODIFICATION CODES

CONTACT OPTIONS		
Sym	**Description**	
B0	Connector without Contacts**	
B1	Connector with Gold Plated Contacts	
Omit for standard version (Silver plated)		
STANDARD MATERIAL AND FINISH (*)		
Sym	**Description**	**RoHS**
	Omit for Aluminum/ Cadmium Olive Drab	
F6	Aluminum/ Black Electrodeposited Paint	✓
F7	Aluminum/ Black Zinc Nickel	✓
F11	Aluminum/ Electroless Nickel	✓
MB	Marine Bronze/ Unplated	✓
FK	Stainless Steel/ Passivate	✓

(*) For further options, please contact the factory.

(**) Crimp Contacts Only

TABLE III

ELASTOMER OPTIONS	
Sym	**Description**
	Omit for Polychloroprene Elastomer
FR	Fire Resistant Elastomer
S	Silicone Elastomer

© 2015 Glenair, Inc.

Downloaded from Arrow.com.

ITS 02 PP
Through Bulkhead Square Flange Receptable
Front Mount with "O" -Ring Seal

Elastomer Option (See Table III)		*02PP* - Thru-Bulkhead		Solid Contact Gender *P/S* - Pin/ Socket		Mod Code Option (See Table II)
XX	**ITS**	**02PP**	**20-27**	**P/S**	**Y**	**XXX**
	Reverse Bayonet Coupling *ITS* - Alumium Shell with Stainless Steel Studs *ITB* - Marine Bronze or Stainless Steel Shell without Stainless Steel Studs For further details, see diagram on page A-38		Shell Size and Insert Arrangement (See Section A)		Alternate Insert Rotation (W, X, Y, Z) Omit for Normal (See Section A)	

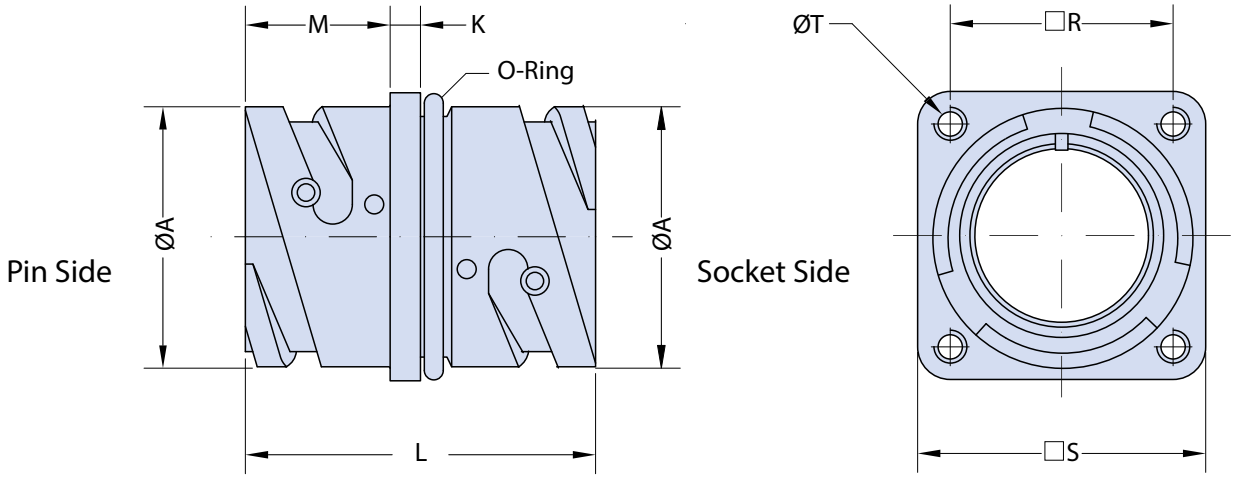

Application Notes

1. Through Bulkhead Receptacle. Connector features an o-ring mounting seal. Contacts are solid feedthrough style in a pin/socket configuration.
2. Threaded mounting holes.
3. Standard materials configuration consists of aluminum alloy. For platings, see TABLE II finish options.
4. Standard contact material consists of copper alloy with silver plating or gold plating.

© 2015 Glenair, Inc. U.S. CAGE Code 06324 Printed in Italy

Downloaded from Arrow.com.

ITS 02 PP
Through Bulkhead Square Flange Receptable
Front Mount with "O" -Ring Seal

TABLE I: DIMENSIONS

Shell Size	ØA +0.2 -0.1	K ±0.2	L ±0.3	M +0.4 -0	R ±0.2	S ±0.2	T Thread
10 SL	18.2	2.8	37.0	14.2	18.25	25.4	M4
14 S	24.5	3.2	37.5	14.2	23.00	30.4	M4
16 S	27.2	3.2	37.5	14.2	24.60	32.5	M4
16	27.2	3.2	51.4	19.0	24.60	32.5	M4
18	30.7	4.0	51.4	19.0	27.00	35.0	M4
20	34.0	4.0	51.4	19.0	29.40	38.0	M4
22	37.3	4.0	51.4	19.0	31.75	41.0	M4
24	40.9	4.0	51.4	20.6	34.90	44.5	M4
28	46.7	4.0	51.4	20.6	39.70	50.9	M5
32	53.4	4.0	51.4	22.2	44.50	57.0	M5
36	59.6	4.0	51.4	22.2	49.20	63.5	M5
40	65.5	4.0	51.4	22.2	55.55	69.9	M5

For through mounting holes refer to page B-3.

TABLE II: MODIFICATION CODES

CONTACT OPTIONS		
Sym	**Description**	
B1	Connector with Gold Plated Contacts	
Omit for standard version (Silver plated)		
STANDARD MATERIAL AND FINISH (*)		
Sym	**Description**	**RoHS**
	Omit for Aluminum/ Cadmium Olive Drab	
F6	Aluminum/ Black Electrodeposited Paint	✓
F7	Aluminum/ Black Zinc Nickel	✓
F11	Aluminum/ Electroless Nickel	✓
MB	Marine Bronze/ Unplated	✓
FK	Stainless Steel/ Passivate	✓

(*) For further options, please contact the factory.

TABLE III

ELASTOMER OPTIONS	
Sym	**Description**
	Omit for Polychloroprene Elastomer
FR	Fire Resistant Elastomer
S	Silicone Elastomer

© 2015 Glenair, Inc.

Downloaded from Arrow.com.

ITS 3102 Y
Front Panel Mount Square Flange Receptacle with PCB Contacts
No Accessory Threads

XX	ITS	31	02	Y	20-27	P	Y	XXX
Elastomer Option (See Table V)	Reverse Bayonet Coupling *ITS* - Alumium Shell with Stainless Steel Studs *ITB* - Marine Bronze or Stainless Steel Shell without Stainless Steel Studs For further details, see diagram on page A-38	Contact Type *31* - Solder	*02* - Front Wall Mount	Connector Class *Y* - PCB Tails (See Table I and II for different Dimensions)	Shell Size and Insert Arrangement (See Section A)	Contact Gender *P* - Pin *S* - Socket	Alternate Insert Rotation (W, X, Y, Z) Omit for Normal (See Section A)	Mod Code Option (See Table III & IV)

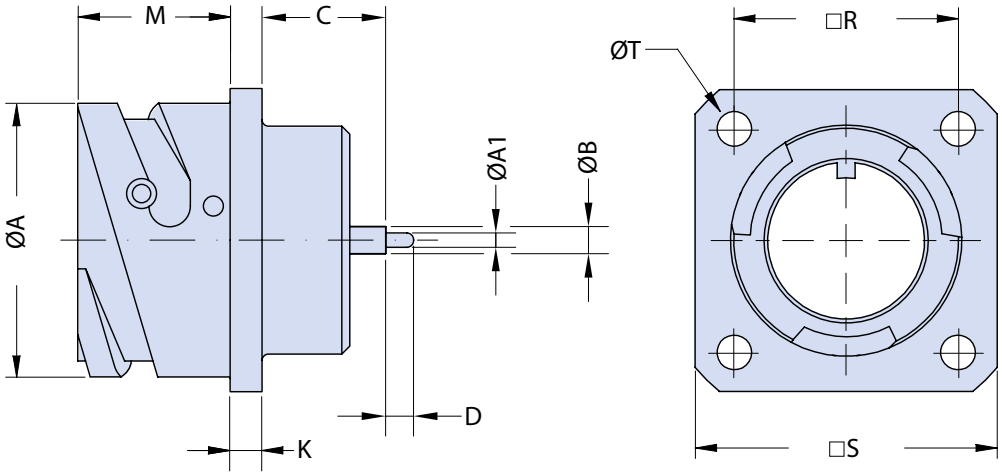

Application Notes

1. Front panel mount square flange receptacle with PCB contacts and no accessory threads. Contact factory for custom tail lengths.
2. Through mounting holes.
3. Standard materials configuration consists of aluminum alloy. For platings, see TABLE III finish options.
4. Standard contact material consists of copper alloy with silver plating or gold plating.

© 2015 Glenair, Inc. U.S. CAGE Code 06324 Printed in Italy

Downloaded from Arrow.com.

ITS 3102 Y
Front Panel Mount Square Flange Receptacle with PCB Contacts
No Accessory Threads

TABLE I: Y SIZE 16 AND 12 CONTACTS

Shell Size	Y#12				Y#16			
	A1	B	C ±0.4	D	A1	B	C ±0.4	D
10 SL	-	-	-	-	-	-	-	-
14 S	-	-	-	-	-	-	-	-
16 S	-	-	-	-	-	-	-	-
16	1.8	3.4	18.85	3.5	0.8	1.8	18.85	3.5
18	1.8	3.4	17.25	3.5	0.8	1.8	17.25	3.5
20	1.8	3.4	17.15	3.5	0.8	1.8	17.15	3.5
22	1.8	3.4	17.15	3.5	0.8	1.8	17.15	3.5
24	1.8	3.4	14.00	3.5	0.8	1.8	14.00	3.5
28	1.8	3.4	15.10	3.5	0.8	1.8	15.10	3.5
32	1.8	3.4	13.60	3.5	0.8	1.8	13.60	3.5
36	1.8	3.4	14.80	3.5	0.8	1.8	14.80	3.5
40	1.8	3.4	14.80	3.5	0.8	1.8	14.80	3.5

TABLE II: Y OTHER CONTACTS - SIZE 16 ONLY

Shell Size	DS1				YL5				YL7			
	A1	B	C ±0.4	D	A1	B	C ±0.4	D	A1	B	C ±0.4	D
10 SL	0.75	1.8	15.50	3.6	-	-	-	-	-	-	-	-
14 S	0.75	1.8	13.30	3.6	-	-	-	-	-	-	-	-
16 S	0.75	1.8	13.20	3.6	-	-	-	-	-	-	-	-
16	0.75	1.8	15.60	3.6	0.8	1.8	18.85	5.0	0.8	1.8	14.35	7.0
18	0.75	1.8	14.00	3.6	0.8	1.8	17.25	5.0	0.8	1.8	13.55	7.0
20	0.75	1.8	13.90	3.6	0.8	1.8	17.15	5.0	0.8	1.8	13.55	7.0
22	0.75	1.8	13.40	3.6	0.8	1.8	17.15	5.0	0.8	1.8	13.55	7.0
24	0.75	1.8	10.80	3.6	0.8	1.8	14.00	5.0	0.8	1.8	11.90	7.0
28	0.75	1.8	12.70	3.6	0.8	1.8	15.10	5.0	0.8	1.8	11.90	7.0
32	-	-	-	-	0.8	1.8	13.60	5.0	-	-	-	-
36	-	-	-	-	0.8	1.8	14.80	5.0	-	-	-	-
40	-	-	-	-	0.8	1.8	14.80	5.0	-	-	-	-

For missing dimensions refer to page B-3.

TABLE III: FINISH OPTIONS

STANDARD MATERIAL AND FINISH (*)		
Sym	**Description**	**RoHS**
	Omit for Aluminum/ Cadmium Olive Drab	
F6	Aluminum/ Black Electrodeposited Paint	✓
F7	Aluminum/ Black Zinc Nickel	✓
F11	Aluminum/ Electroless Nickel	✓
MB	Marine Bronze/ Unplated	✓
FK	Stainless Steel/ Passivate	✓

(*) For further finish options, please contact the factory.

TABLE IV: MODIFICATION CODES

CONTACT OPTIONS	
Sym	**Description**
B1	Connector with Gold Plated Contacts
Omit for standard version (Silver plated)	

TABLE V

ELASTOMER OPTIONS	
Sym	**Description**
	Omit for Polychloroprene Elastomer
FR	Fire Resistant Elastomer
S	Silicone Elastomer

© 2015 Glenair, Inc. U.S. CAGE Code 06324 Printed in Italy

Downloaded from Arrow.com.

ITS 3103 Y
Rear Panel Mount Square Flange Receptacle with PCB Contacts
No Accessory Threads

XX	ITS	31	03	Y	FP	20-27	P	Y	XXX
Elastomer Option (See Table V)	Reverse Bayonet Coupling *ITS* - Alumium Shell with Stainless Steel Studs *ITB* - Marine Bronze or Stainless Steel Shell without Stainless Steel Studs For further details, see diagram on page A-38	Contact Type *31* - Solder	*03* - Rear Wall Mount	Connector Class *Y* - PCB Tails (See Table I and II for different Dimensions)	Mounting Holes *FP* - Through Mounting Holes *OMIT* - For Threaded Mounting Holes	Shell Size and Insert Arrangement (See Section A)	Contact Gender *P* - Pin *S* - Socket	Alternate Insert Rotation (W, X, Y, Z) Omit for Normal (See Section A)	Mod Code Option (See Table III & IV)

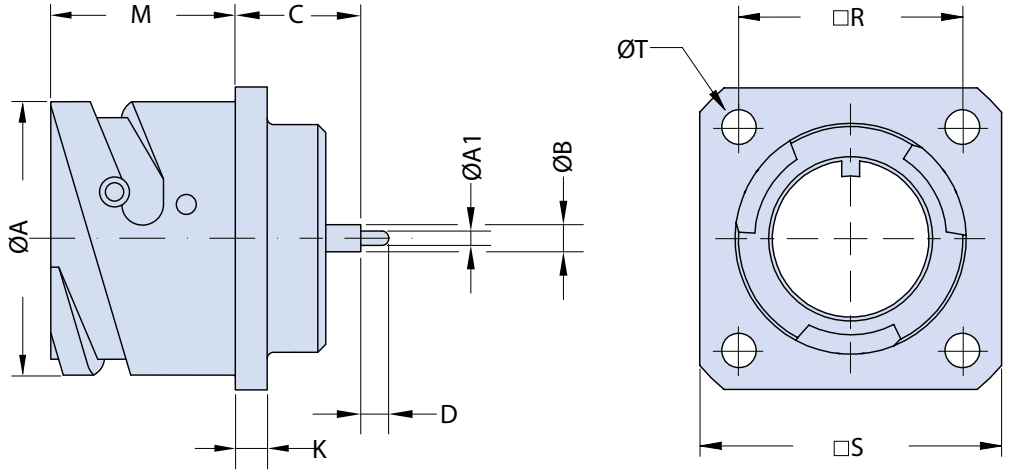

Application Notes

1. Rear panel mount square flange receptacle with PCB contacts—no accessory threads. Threaded mounting holes standard. Optional non-threaded through mounting holes available. Contact factory for custom tail lengths.
2. Standard materials configuration consists of aluminum alloy. For platings, see TABLE III finish options.
3. Standard contact material consists of copper alloy with silver plating or gold plating.
4. A broad range of other front and rear connector accessories are available. See our website and/or contact the factory for complete information.

© 2015 Glenair, Inc. U.S. CAGE Code 06324 Printed in Italy

Downloaded from Arrow.com.

ITS 3103 Y
Rear Panel Mount Square Flange Receptacle with PCB Contacts
No Accessory Threads

TABLE I: Y SIZE 16 AND 12 CONTACTS

Shell Size	Y#12				Y#16			
	A1	B	C ±0.4	D	A1	B	C ±0.4	D
10 SL	—	—	—	—	—	—	—	—
14 S	—	—	—	—	—	—	—	—
16 S	—	—	—	—	—	—	—	—
16	1.8	3.4	17.05	3.5	0.8	1.8	17.05	3.5
18	1.8	3.4	16.85	3.5	0.8	1.8	16.85	3.5
20	1.8	3.4	16.95	3.5	0.8	1.8	16.95	3.5
22	1.8	3.4	16.95	3.5	0.8	1.8	16.95	3.5
24	1.8	3.4	17.15	3.5	0.8	1.8	16.95	3.5
28	1.8	3.4	15.65	3.5	0.8	1.8	15.65	3.5
32	1.8	3.4	15.85	3.5	0.8	1.8	15.85	3.5
36	1.8	3.4	15.95	3.5	0.8	1.8	15.95	3.5
40	1.8	3.4	15.65	3.5	0.8	1.8	15.65	3.5

TABLE II: Y OTHER CONTACTS - SIZE 16 ONLY

Shell Size	DS1				YL5				YL7			
	A1	B	C ±0.4	D	A1	B	C ±0.4	D	A1	B	C ±0.4	D
10 SL	0.75	1.8	12.35	3.6	—	—	—	—	—	—	—	—
14 S	0.75	1.8	11.65	3.6	—	—	—	—	—	—	—	—
16 S	0.75	1.8	11.55	3.6	—	—	—	—	—	—	—	—
16	0.75	1.8	13.80	3.6	0.8	1.8	17.05	5.0	0.8	1.8	13.35	7.0
18	0.75	1.8	13.60	3.6	0.8	1.8	16.85	5.0	0.8	1.8	13.35	7.0
20	0.75	1.8	13.70	3.6	0.8	1.8	16.95	5.0	0.8	1.8	13.35	7.0
22	0.75	1.8	13.70	3.6	0.8	1.8	16.95	5.0	0.8	1.8	13.35	7.0
24	0.75	1.8	13.70	3.6	0.8	1.8	16.95	5.0	0.8	1.8	13.35	7.0
28	0.75	1.8	12.40	3.6	0.8	1.8	15.65	5.0	0.8	1.8	12.25	7.0
32	—	—	—	—	0.8	1.8	15.85	5.0	—	—	—	—
36	—	—	—	—	0.8	1.8	15.95	5.0	—	—	—	—
40	—	—	—	—	0.8	1.8	15.65	5.0	—	—	—	—

For missing dimensions refer to page B-67.

TABLE III: FINISH OPTIONS

STANDARD MATERIAL AND FINISH (*)		
Sym	Description	RoHS
	Omit for Aluminum/ Cadmium Olive Drab	
F6	Aluminum/ Black Electrodeposited Paint	✓
F7	Aluminum/ Black Zinc Nickel	✓
F11	Aluminum/ Electroless Nickel	✓
MB	Marine Bronze/ Unplated	✓
FK	Stainless Steel/ Passivate	✓

(*) For further finish options, please contact the factory.

TABLE IV: MODIFICATION CODES

CONTACT OPTIONS	
Sym	Description
B1	Connector with Gold Plated Contacts
Omit for standard version (Silver plated)	

TABLE V

ELASTOMER OPTIONS	
Sym	Description
	Omit for Polychloroprene Elastomer
FR	Fire Resistant Elastomer
S	Silicone Elastomer

© 2015 Glenair, Inc. U.S. CAGE Code 06324 Printed in Italy

Downloaded from Arrow.com.

ITS 3103 A and ITS 3103 R
ITS 4103 A and ITS 4103 R
Rear Panel Mount Square Flange Receptacle
No Accessory Threads

Elastomer Option (See Table III)		03 - Rear Wall Mount		Mounting Holes FP - Through Mounting Holes OMIT - For Threaded Mounting Holes			Contact Gender P - Pin S - Socket		Mod Code Option (See Table II)
XX	ITS	31	03	A	FP	20-27	P	Y	XXX
	Reverse Bayonet Coupling ITS - Alumium Shell with Stainless Steel Studs ITB - Marine Bronze or Stainless Steel Shell without Stainless Steel Studs For further details, see diagram on page A-38		Contact Type 31 - Solder 41 - Crimp		Connector Class A - General Duty R - Sealed Insulator		Shell Size and Insert Arrangement (See Section A)		Alternate Insert Rotation (W, X, Y, Z) Omit for Normal (See Section A)

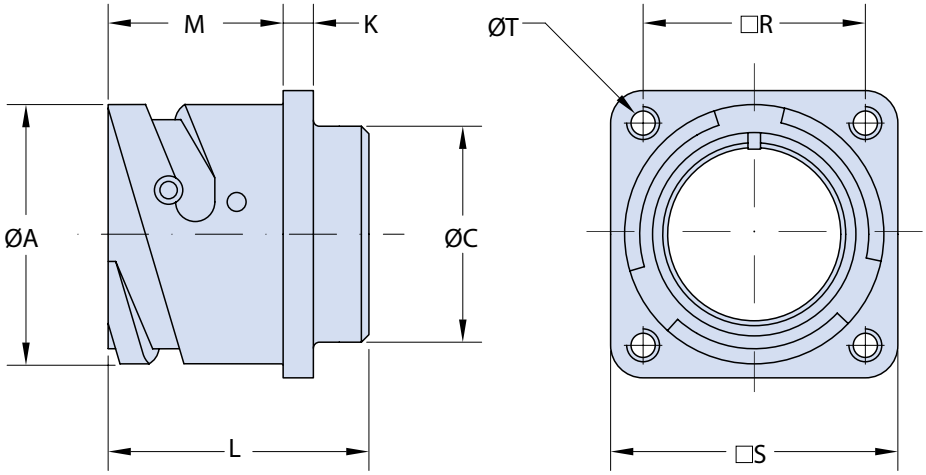

Application Notes

1. Rear panel mount square flange receptacle—no accessory threads. Threaded mounting holes standard. Optional non-threaded through mounting holes.
2. Connector Class "A" (general duty).
   Connector Class "R" (environmental): sealed insulator only with solder contacts.
3. Standard materials configuration consists of aluminum alloy. For platings, see TABLE II finish options.
4. Standard contact material consists of copper alloy with silver plating or gold plating.

© 2015 Glenair, Inc. U.S. CAGE Code 06324 Printed in Italy

Downloaded from Arrow.com.

ITS 3103 A and ITS 3103 R
ITS 4103 A and ITS 4103 R
Rear Panel Mount Square Flange Receptacle
No Accessory Threads

TABLE I: DIMENSIONS

Shell Size	ØA +0.2 -0.1	ØC Max.	K ±0.2	L Max.	M +0.2 -0	R ±0.2	S ±0.2	T Thread
10 SL	18.2	16.2	2.8	25.0	18.4	18.25	25.4	M4
14 S	24.5	19.2	3.2	25.0	18.4	23.00	30.4	M4
16 S	27.2	22.4	3.2	25.0	18.4	24.60	32.5	M4
16	27.2	22.4	3.2	34.5	23.2	24.60	32.5	M4
18	30.7	25.6	4.0	34.5	23.2	27.00	35.0	M4
20	34.0	29.0	4.0	34.5	23.2	29.40	38.0	M4
22	37.3	32.2	4.0	34.5	23.2	31.75	41.0	M4
24	40.9	35.3	4.0	34.5	23.2	34.90	44.5	M4
28	46.7	41.4	4.0	34.5	24.2	39.70	50.9	M5
32	53.4	47.8	4.0	34.5	24.2	44.50	57.0	M5
36	59.6	54.1	4.0	34.5	24.2	49.20	63.5	M5
40	65.5	59.0	4.0	34.5	24.2	55.55	69.9	M5

For through mounting holes refer to page B-3.

TABLE II: MODIFICATION CODES

CONTACT OPTIONS		
Sym	**Description**	
B0	Connector without Contacts**	
B1	Connector with Gold Plated Contacts	
Omit for standard version (Silver plated)		
STANDARD MATERIAL AND FINISH (*)		
Sym	**Description**	**RoHS**
	Omit for Aluminum/ Cadmium Olive Drab	
F6	Aluminum/ Black Electrodeposited Paint	✓
F7	Aluminum/ Black Zinc Nickel	✓
F11	Aluminum/ Electroless Nickel	✓
MB	Marine Bronze/ Unplated	✓
FK	Stainless Steel/ Passivate	✓

(*) For further options, please contact the factory.

(**) Crimp Contacts Only

TABLE III

ELASTOMER OPTIONS	
Sym	**Description**
	Omit for Polychloroprene Elastomer
FR	Fire Resistant Elastomer
S	Silicone Elastomer

© 2015 Glenair, Inc. U.S. CAGE Code 06324 Printed in Italy

Downloaded from Arrow.com.

ITS 31030 A N0 and ITS 41030 A N0
Rear Panel Mount Square Flange Receptacle
with Accessory Mounting Threads

XX	ITS	31	030	A	FP	20-27	P	Y	XX	N0	XXX

- **XX** — Elastomer Option (See Table III)
- **ITS** — Reverse Bayonet Coupling
  ITS - Alumium Shell with Stainless Steel Studs
  ITB - Marine Bronze or Stainless Steel Shell without Stainless Steel Studs
  For further details, see diagram on page A-38
- **31** — Contact Type
  31 - Solder
  41 - Crimp
- **030** — *030* - Rear Wall Mount
- **A** — Connector Class
  A - General Duty
  R - Sealed Insulator
- **FP** — Mounting Holes
  FP - Through Mounting Holes
  OMIT - For Threaded Mounting Holes
- **20-27** — Shell Size and Insert Arrangement (See Section A)
- **P** — Contact Gender
  P - Pin
  S - Socket
- **Y** — Alternate Insert Rotation (W, X, Y, Z) Omit for Normal (See Section A)
- **XX** — Contact Options (See Table IV)
- **N0** — *NO* - No Backshell
  NOG - Supplied with Grommet and Compression Ring, No Backshell
- **XXX** — Mod Code Option (See Table II)

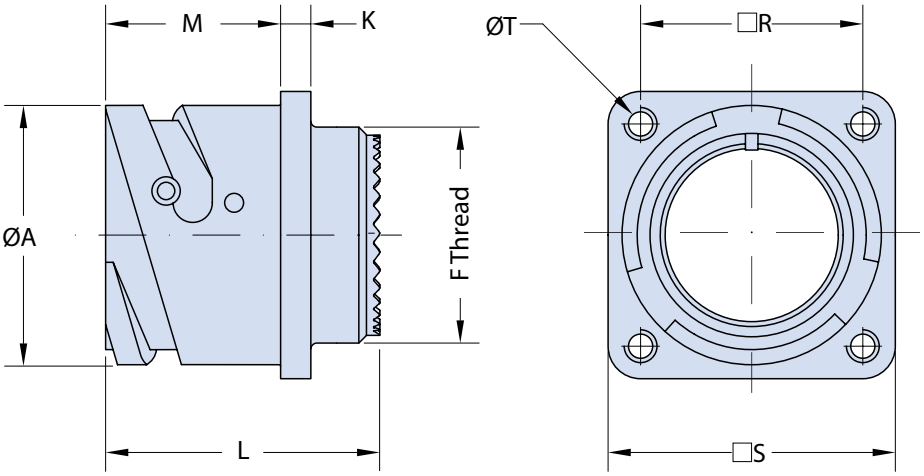

Application Notes

1. Rear panel mount square flange receptacle with rear threads for attachment of various backend connector accessories. Threaded mounting holes standard. Optional non-threaded through mounting holes available.
2. Connector Class "A" (general duty); Connector Class "R"(enviromental): sealed insulator only with solder contacts.
3. Standard materials configuration consists of aluminum alloy. For platings, see TABLE II finish options.
4. Standard contact material consists of copper alloy with silver plating or gold plating.
5. A broad range of other front and rear connector accessories are available.
   See our website and/or contact the factory for complete information.

© 2015 Glenair, Inc. U.S. CAGE Code 06324 Printed in Italy

Downloaded from Arrow.com.

ITS 31030 A N0 and ITS 41030 A N0
Rear Panel Mount Square Flange Receptacle
with Accessory Mounting Threads

TABLE I: DIMENSIONS

Shell Size	ØA +0.2 -0.1	K ±0.2	L ±0.2	M +0.2 -0	R ±0.2	S ±0.2	T Thread	F Thread
10 SL	18.2	2.8	30.0	18.4	18.25	25.4	M4	0.6250 - 24UNEF
14 S	24.5	3.2	30.0	18.4	23.00	30.4	M4	0.7500 - 20UNEF
16 S	27.2	3.2	30.0	18.4	24.60	32.5	M4	0.8750 - 20UNEF
16	27.2	3.2	37.0	23.2	24.60	32.5	M4	0.8750 - 20UNEF
18	30.7	4.0	36.0	23.2	27.00	35.0	M4	1.0000 - 20UNEF
20	34.0	4.0	38.3	23.2	29.40	38.0	M4	1.1250 - 18UNEF
22	37.3	4.0	37.0	23.2	31.75	41.0	M4	1.2500 - 18UNEF
24	40.9	4.0	37.0	23.2	34.90	44.5	M4	1.3750 - 18UNEF
28	46.7	4.0	39.5	24.2	39.70	50.9	M5	1.6250 - 18UNEF
32	53.4	4.0	39.5	24.2	44.50	57.0	M5	1.8750 - 16UN
36	59.6	4.0	39.5	24.2	49.20	63.5	M5	2.0625 - 16UNS
40	65.5	4.0	39.5	24.2	55.55	69.9	M5	2.3125 - 16UNS

For through mounting holes refer to page B-3.

TABLE II: MODIFICATION CODES

STANDARD MATERIAL AND FINISH (*)		
Sym	**Description**	**RoHS**
	Omit for Aluminum/ Cadmium Olive Drab	
F6	Aluminum/ Black Electrodeposited Paint	✓
F7	Aluminum/ Black Zinc Nickel	✓
F11	Aluminum/ Electroless Nickel	✓
MB	Marine Bronze/ Unplated	✓
FK	Stainless Steel/ Passivate	✓

TABLE III

ELASTOMER OPTIONS	
Sym	**Description**
	Omit for Polychloroprene Elastomer
FR	Fire Resistant Elastomer
S	Silicone Elastomer

TABLE IV: MODIFICATION CODES

CONTACT OPTIONS	
Sym	**Description**
B0	Connector without Contacts**
B1	Connector with Gold Plated Contacts
Omit for standard version (Silver plated)	

(*) For further options, please contact the factory.

(**) Crimp Contacts Only

© 2015 Glenair, Inc. U.S. CAGE Code 06324 Printed in Italy

Downloaded from Arrow.com.

ITS 31030 A and ITS 31030 R
ITS 41030 A and ITS 41030 R
Rear Panel Mount Square Flange Receptacle Assembly
with Backshell for the Attachment of Additional Accessories

XX	ITS	31	030	A	FP	20-27	P	Y	XXX
Elastomer Option (See Table III)	Reverse Bayonet Coupling *ITS* - Alumium Shell with Stainless Steel Studs *ITB* - Marine Bronze or Stainless Steel Shell without Stainless Steel Studs For further details, see diagram on page A-38	Contact Type *31* - Solder *41* - Crimp	*03* - Rear Wall Mount	Connector/Backshell Class *A* - Non-Environmental; Supplied with Backshell Only *R* - Environmental; Supplied with Backshell and Grommet	Mounting Holes *FP* - Through Mounting Holes *OMIT* - For Threaded Mounting Holes	Shell Size and Insert Arrangement (See Section A)	Contact Gender *P* - Pin *S* - Socket	Alternate Insert Rotation (W, X, Y, Z) Omit for Normal (See Section A)	Mod Code Option (See Table II)

B

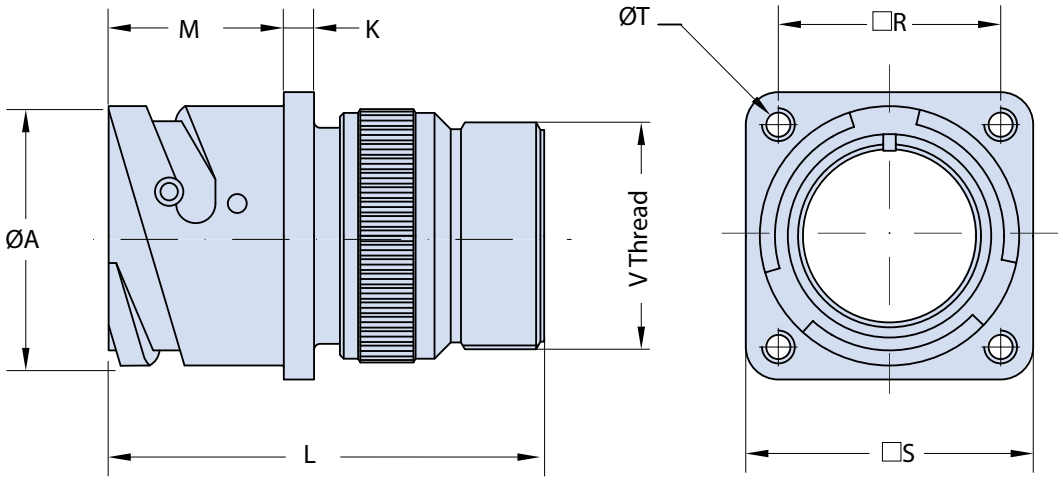

Application Notes

1. Rear panel mount square flange receptacle assembly with backshell for the attachment of strain relieving cable clamps or other accessories. Threaded mounting holes. Optional non-threaded through mounting holes available.
2. Connector/Backshell Class "A" (non-environmental)—Not supplied with wire sealing grommet; Class "R" (environmental)—Supplied with grommet.
3. Standard materials configuration consists of aluminum alloy. For platings, see TABLE II finish options.
4. Standard contact material consists of copper alloy with silver plating or gold plating.
5. A broad range of other front and rear connector accessories are available. See our website and/or contact the factory for complete information.
6. Order cable clamps separately.

© 2015 Glenair, Inc. U.S. CAGE Code 06324 Printed in Italy

Downloaded from Arrow.com.

ITS 31030 A and ITS 31030 R
ITS 41030 A and ITS 41030 R
Rear Panel Mount Square Flange Receptacle Assembly
with Backshell for the Attachment of Additional Accessories

TABLE I: DIMENSIONS

Shell Size	ØA +0.2 -0.1	K ±0.2	L Max.	M +0.2 -0	R ±0.2	S ±0.2	T Thread	V Thread
10 SL	18.2	2.8	49.5	18.4	18.25	25.4	M4	0.6250 - 24UNEF
14 S	24.5	3.2	52.0	18.4	23.00	30.4	M4	0.7500 - 20UNEF
16 S	27.2	3.2	52.0	18.4	24.60	32.5	M4	0.8750 - 20UNEF
16	27.2	3.2	60.5	23.2	24.60	32.5	M4	0.8750 - 20UNEF
18	30.7	4.0	60.5	23.2	27.00	35.0	M4	1.0000 - 20UNEF
20	34.0	4.0	62.5	23.2	29.40	38.0	M4	1.1875 - 18UNEF
22	37.3	4.0	62.5	23.2	31.75	41.0	M4	1.1875 - 18UNEF
24	40.9	4.0	62.5	23.2	34.90	44.5	M4	1.4375 - 18UNEF
28	46.7	4.0	70.0	24.2	39.70	50.9	M5	1.4375 - 18UNEF
32	53.4	4.0	71.5	24.2	44.50	57.0	M5	1.7500 - 18UNS
36	59.6	4.0	79.0	24.2	49.20	63.5	M5	2.0000 - 18UNS
40	65.5	4.0	79.0	24.2	55.55	69.9	M5	2.2500 - 16UN

For through mounting holes refer to page B-3.

TABLE II: MODIFICATION CODES

CONTACT OPTIONS		
Sym	**Description**	
B0	Connector without Contacts**	
B1	Connector with Gold Plated Contacts	
Omit for standard version (Silver plated)		
STANDARD MATERIAL AND FINISH (*)		
Sym	**Description**	**RoHS**
	Omit for Aluminum/ Cadmium Olive Drab	
F6	Aluminum/ Black Electrodeposited Paint	✓
F7	Aluminum/ Black Zinc Nickel	✓
F11	Aluminum/ Electroless Nickel	✓
MB	Marine Bronze/ Unplated	✓
FK	Stainless Steel/ Passivate	✓

(*) For further options, please contact the factory.

(**) Crimp Contacts Only

TABLE III

ELASTOMER OPTIONS	
Sym	**Description**
	Omit for Polychloroprene Elastomer
FR	Fire Resistant Elastomer
S	Silicone Elastomer

© 2015 Glenair, Inc. U.S. CAGE Code 06324 Printed in Italy

Downloaded from Arrow.com.

ITS 31030 A BR and ITS 31030 R BR
ITS 41030 A BR and ITS 41030 R BR
Rear Panel Mount Square Flange Receptacle Assembly
with Backshell for Termination of UNI4883 Rubber Conduit

Elastomer Option (See Table V)	Contact Type	Connector/Backshell Class	Contact Gender	Contact Options (See Table IV)	UNI4883 Backshell Adapter Shell Size Designator (See Table II)
	31 - Solder *41* - Crimp	*A* - Non-Environmental; Supplied with Backshell Only *R* - Environmental; Supplied with Backshell and Grommet	*P* - Pin *S* - Socket		

XX	ITS	31	030	A	FP	20-27	P	Y	XX	BR2722	XXX

Reverse Bayonet Coupling		Mounting Holes	Shell Size and Insert Arrangement (See Section A)	Alternate Insert Rotation (W, X, Y, Z) Omit for Normal (See Section A)	Mod Code Option (See Table III)
ITS - Alumium Shell with Stainless Steel Studs *ITB* - Marine Bronze or Stainless Steel Shell without Stainless Steel Studs For further details, see diagram on page A-38	*030* - Rear Wall Mount	*FP* - Through Mounting Holes *OMIT* - For Threaded Mounting Holes			

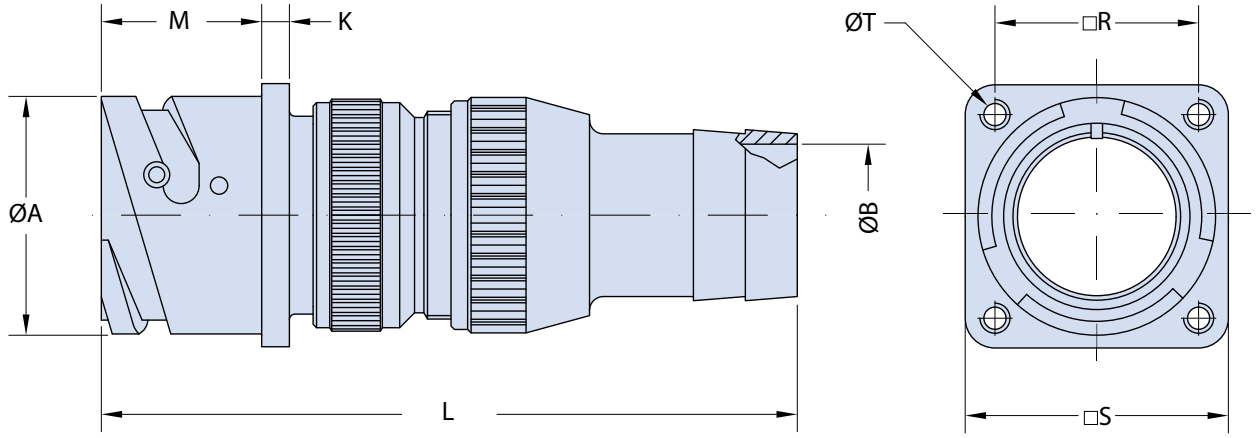

Application Notes

1. Rear panel mount square flange receptacle with backshell for termination of UNI4883 type rubber conduit. Threaded mounting holes. Optional non-threaded through mounting holes available.
2. Connector/Backshell Class "A" (non-environmental)—Not supplied with wire sealing grommet; Class "R" (environmental)—Supplied with grommet.
3. Standard materials configuration consists of aluminum alloy. For platings, see TABLE III finish options.
4. Standard contact material consists of copper alloy with silver plating or gold plating.

© 2015 Glenair, Inc. U.S. CAGE Code 06324 Printed in Italy

Downloaded from Arrow.com.

ITS 31030 A BR and ITS 31030 R BR
ITS 41030 A BR and ITS 41030 R BR
Rear Panel Mount Square Flange Receptacle Assembly
with Backshell for Termination of UNI4883 Rubber Conduit

TABLE I: DIMENSIONS

Shell Size	ØA +0.2 -0.1	ØB ±0.1	K ±0.2	L Max.	M +0.2 -0	R ±0.2	S ±0.2	T Thread
10 SL	18.2	See Table III Below	2.8	95.0	18.4	18.25	25.4	M4
14 S	24.5		3.2	96.5	18.4	23.00	30.4	M4
16 S	27.2		3.2	96.5	18.4	24.60	32.5	M4
16	27.2		3.2	108.0	23.2	24.60	32.5	M4
18	30.7		4.0	108.0	23.2	27.00	35.0	M4
20	34.0		4.0	108.0	23.2	29.40	38.0	M4
22	37.3		4.0	108.0	23.2	31.75	41.0	M4
24	40.9		4.0	109.5	23.2	34.90	44.5	M4
28	46.7		4.0	116.0	24.2	39.70	50.9	M5
32	53.4		4.0	121.5	24.2	44.50	57.0	M5
36	59.6		4.0	127.0	24.2	49.20	63.5	M5
40	65.5		4.0	127.0	24.2	55.55	69.9	M5

TABLE II: BACKSHELL DIMENSIONS

Shell Size	Rubber tube in accordance with UNI 4883 to be used by size		ØB ±0.1
	Ø Min	Ø Max	
10 SL	12.0	17.0	10.5
14 S	22.0	27.0	16.5
16-16S	12.0	17.0	10.5
16-16S	15.0	20.0	14.0
18	22.0	27.0	20.5
20 - 22	12.0	17.0	10.5
20 - 22	20.0	25.0	18.5
20 - 22	22.0	27.0	20.5
20 - 22	28.0	33.0	25.0
20 - 22	30.0	35.0	28.5
20 - 22	33.0	38.0	31.5
24 - 28	20.0	25.0	18.5
24 - 28	22.0	27.0	20.5
24 - 28	25.0	30.0	23.5
24 - 28	28.0	33.0	26.5
24 - 28	30.0	35.0	28.5
24 - 28	33.0	38.0	31.5
24 - 28	45.0	50.0	43.5
32	25.0	30.0	23.5
32	28.0	33.0	26.5
32	30.0	35.0	28.5
32	35.0	40.0	31.5
32	40.0	45.0	38.5
32	45.0	50.0	40.0
36	30.0	35.0	28.5
36	35.0	40.0	31.5
36	45.0	50.0	43.5
40	30.0	35.0	28.5
40	35.0	40.0	31.5
40	40.0	45.0	38.5
40	45.0	50.0	43.5
40	50.0	55.0	48.5

TABLE III: MODIFICATION CODES

CONTACT OPTIONS	
Sym	**Description**
B0	Connector without Contacts**
B1	Connector with Gold Plated Contacts
Omit for standard version (Silver plated)	

TABLE IV: MODIFICATION CODES

STANDARD MATERIAL AND FINISH (*)		
Sym	**Description**	**RoHS**
	Omit for Aluminum/ Cadmium Olive Drab	
F6	Aluminum/ Black Electrodeposited Paint	✓
F7	Aluminum/ Black Zinc Nickel	✓
F11	Aluminum/ Electroless Nickel	✓
MB	Marine Bronze/ Unplated	✓
FK	Stainless Steel/ Passivate	✓

TABLE V

ELASTOMER OPTIONS	
Sym	**Description**
	Omit for Polychloroprene Elastomer
FR	Fire Resistant Elastomer
S	Silicone Elastomer

(*) For further options, please contact the factory.
(**) Crimp Contacts Only

© 2015 Glenair, Inc.
U.S. CAGE Code 06324
Printed in Italy

Downloaded from Arrow.com.

ITS 31030 A PG and ITS 31030 R PG
ITS 41030 A PG and ITS 41030 R PG
Rear Panel Mount Square Flange Receptacle Assembly
with Backshell for Attachment of PG Cable Glands

Elastomer Option (See Table III)	Contact Type *31* - Solder *41* - Crimp	*03* - Rear Wall Mount	Mounting Holes *FP* - Through Mounting Holes *OMIT* - For Threaded Mounting Holes	Contact Gender *P* - Pin *S* - Socket	Contact Options (See Table IV	Mod Code Option (See Table II)
XX	ITS 31	030	A FP	20-27 P	Y XX	PG16 XXX

Reverse Bayonet Coupling *ITS* - Alumium Shell with Stainless Steel Studs *ITB* - Marine Bronze or Stainless Steel Shell without Stainless Steel Studs For further details, see diagram on page A-38	Connector/Backshell Class *A* - Non-Environmental; Supplied with Backshell Only *R* - Environmental; Supplied with Backshell and Grommet	Shell Size and Insert Arrangement (See Section A)	Alternate Insert Rotation (W, X, Y, Z) Omit for Normal (See Section A)	PG Thread (See Table I)

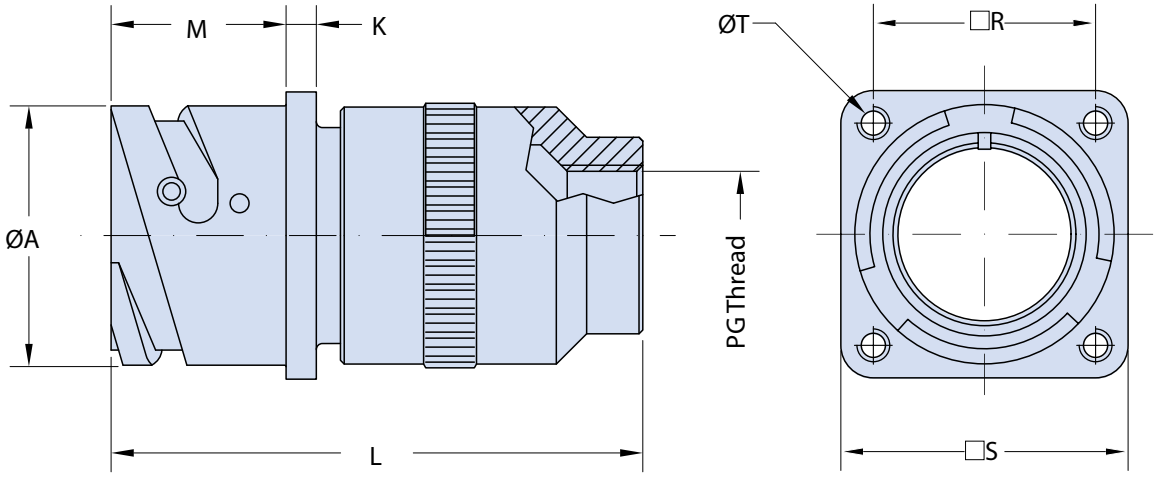

Application Notes

1. Rear panel mount square flange receptacle assembly with backshell for use with PG cable glands (not included). Other types of PG backshells can be supplied in various sizes and angles upon request. Threaded mounting holes. Optional non-threaded through mounting holes available.
2. Connector/Backshell Class "A" (non-environmental)—Not supplied with wire sealing grommet; Class "R" (environmental)—Supplied with grommet.
3. Standard materials configuration consists of aluminum alloy. For platings, see TABLE II finish options.
4. Standard contact material consists of copper alloy with silver plating or gold plating.

© 2015 Glenair, Inc. U.S. CAGE Code 06324 Printed in Italy

Downloaded from Arrow.com.

ITS 31030 A PG and ITS 31030 R PG
ITS 41030 A PG and ITS 41030 R PG
Rear Panel Mount Square Flange Receptacle Assembly
with Backshell for Attachment of PG Cable Glands

TABLE I: DIMENSIONS

Shell Size	ØA +0.2 -0.1	K ±0.2	L Max.	M +0.2 -0	PG Thread Other PG Threads available on request	R ±0.2	S ±0.2	T Thread
10 SL	18.2	2.8	57.0	18.4	7 / 9 / 11	18.25	25.4	M4
14 S	24.5	3.2	59.5	18.4	9/ 11 / 13.5	23.00	30.4	M4
16 S	27.2	3.2	59.5	18.4	11 / 13.5 / 16	24.60	32.5	M4
16	27.2	3.2	73.5	23.2	11 / 13.5 / 16	24.60	32.5	M4
18	30.7	4.0	73.5	23.2	13.5 / 16 / 21	27.00	35.0	M4
20	34.0	4.0	75.5	23.2	13.5 / 16 / 21	29.40	38.0	M4
22	37.3	4.0	75.5	23.2	13.5 / 16 / 21	31.75	41.0	M4
24	40.9	4.0	78.0	23.2	16 / 21/ 29	34.90	44.5	M4
28	46.7	4.0	80.0	24.2	16 / 21/ 29	39.70	50.9	M5
32	53.4	4.0	86.0	24.2	16 / 21/ 29	44.50	57.0	M5
36	59.6	4.0	91.0	24.2	21 / 29 / 36	49.20	63.5	M5
40	65.5	4.0	96.0	24.2	21 / 29 / 36	55.55	69.9	M5

For through mounting holes refer to page B-3.

TABLE II: MODIFICATION CODES

STANDARD MATERIAL AND FINISH (*)		
Sym	**Description**	**RoHS**
	Omit for Aluminum/ Cadmium Olive Drab	
F6	Aluminum/ Black Electrodeposited Paint	✓
F7	Aluminum/ Black Zinc Nickel	✓
F11	Aluminum/ Electroless Nickel	✓
MB	Marine Bronze/ Unplated	✓
FK	Stainless Steel/ Passivate	✓

TABLE III

ELASTOMER OPTIONS	
Sym	**Description**
	Omit for Polychloroprene Elastomer
FR	Fire Resistant Elastomer
S	Silicone Elastomer

TABLE IV: MODIFICATION CODES

CONTACT OPTIONS	
Sym	**Description**
B0	Connector without Contacts**
B1	Connector with Gold Plated Contacts
Omit for standard version (Silver plated)	

(*) For further options, please contact the factory.

(**) Crimp Contacts Only

© 2015 Glenair, Inc. U.S. CAGE Code 06324 Printed in Italy

Downloaded from Arrow.com.

ITS 31030 A FM and ITS 31030 R FM
ITS 41030 A FM and ITS 41030 R FM
Rear Panel Mount Square Flange Receptacle Assembly
with Backshell for use with Metric Cable Gland

Elastomer Option (See Table III)	Contact Type	Connector/Backshell Class	Contact Gender	Contact Options (See Table IV)	Metric Thread Size (See Table I)
	31 - Solder *41* - Crimp	*A* - Non-Environmental; Supplied with Backshell Only *R* - Environmental; Supplied with Backshell and Grommet	*P* - Pin *S* - Socket		

XX	ITS	31	030	A	FP	20-27	P	Y	XX	FM25	XXX

ITS	030	FP	20-27	Y	XXX
Reverse Bayonet Coupling *ITS* - Alumium Shell with Stainless Steel Studs *ITB* - Marine Bronze or Stainless Steel Shell without Stainless Steel Studs For further details, see diagram on page A-38	*030* - Rear Wall Mount	Mounting Holes *FP* - Through Mounting Holes *OMIT* - For Threaded Mounting Holes	Shell Size and Insert Arrangement (See Section A)	Alternate Insert Rotation (W, X, Y, Z) Omit for Normal (See Section A)	Mod Code Option (See Table II)

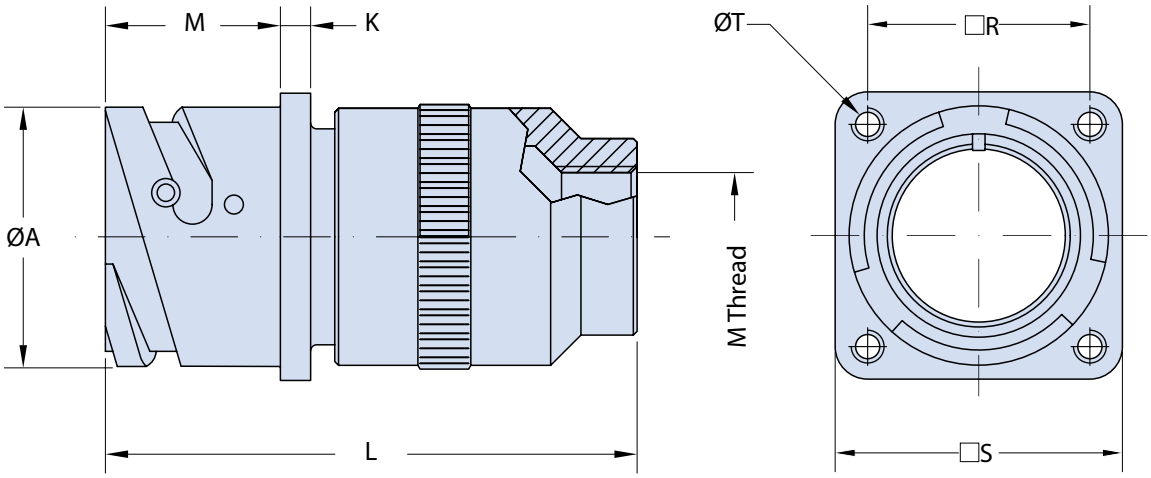

Application Notes

1. Rear panel mount square flange receptacle with backshell for the attachment of metric thread cable glands. Metric cable glands not included. Threaded mounting holes. Optional non-threaded through mounting holes available.
2. Connector/Backshell Class "A" (non-environmental)—Not supplied with wire sealing grommet; Class "R" (environmental)—Supplied with grommet.
3. Standard materials configuration consists of aluminum alloy. For platings, see TABLE II finish options.
4. Standard contact material consists of copper alloy with silver plating or gold plating.

© 2015 Glenair, Inc. U.S. CAGE Code 06324 Printed in Italy

Downloaded from Arrow.com.

ITS 31030 A FM and ITS 31030 R FM
ITS 41030 A FM and ITS 41030 R FM
Rear Panel Mount Square Flange Receptacle Assembly
with Backshell for use with Metric Cable Gland

TABLE I: DIMENSIONS

Shell Size	ØA +0.2 -0.1	L Max.	K ±0.2	M +0.2 -0	M Thread Other M Threads available on request	R ±0.2	S ±0.2	T Thread
10 SL	18.2	57.0	2.8	18.5	M12x1,5	18.25	25.4	M4
14 S	24.5	59.5	3.2	18.5	M16x1,5	23.00	30.4	M4
16 S	27.2	59.5	3.2	18.5	M16x1,5	24.60	32.5	M4
16	27.2	73.5	3.2	23.2	M16x1,5	24.60	32.5	M4
18	30.7	73.5	4.0	23.2	M20x1,5	27.00	35.0	M4
20	34.0	75.5	4.0	23.2	M25x1,5	29.40	38.0	M4
22	37.3	75.5	4.0	23.2	M25x1,5	31.75	41.0	M4
24	40.9	75.5	4.0	23.2	M32x1,5	34.90	44.5	M4
28	46.7	75.5	4.0	24.4	M32x1,5	39.70	50.9	M5
32	53.4	86.0	4.0	24.2	M36x1,5	44.50	57.0	M5
36	59.6	111.0	4.0	24.2	M40x1,5	49.20	63.5	M5
40	65.5	111.0	4.0	24.4	M40x1,5	55.55	69.9	M5

For through mounting holes refer to page B-3.

TABLE II: MODIFICATION CODES

STANDARD MATERIAL AND FINISH (*)		
Sym	**Description**	**RoHS**
	Omit for Aluminum/ Cadmium Olive Drab	
F6	Aluminum/ Black Electrodeposited Paint	✓
F7	Aluminum/ Black Zinc Nickel	✓
F11	Aluminum/ Electroless Nickel	✓
MB	Marine Bronze/ Unplated	✓
FK	Stainless Steel/ Passivate	✓

TABLE III

ELASTOMER OPTIONS	
Sym	**Description**
	Omit for Polychloroprene Elastomer
FR	Fire Resistant Elastomer
S	Silicone Elastomer

TABLE IV: MODIFICATION CODES

CONTACT OPTIONS	
Sym	**Description**
B0	Connector without Contacts**
B1	Connector with Gold Plated Contacts
Omit for standard version (Silver plated)	

(*) For further options, please contact the factory.

(**) Crimp Contacts Only

© 2015 Glenair, Inc. U.S. CAGE Code 06324 Printed in Italy

Downloaded from Arrow.com.

ITS 31030 A PHM and ITS 31030 R PHM
ITS 41030 A PHM and ITS 41030 R PHM
Rear Panel Mount Square Flange Receptacle Assembly
with Environmental PHM Backshell

Elastomer Option (See Table III)	Contact Type	Connector/Backshell Class	Contact Gender	Contact Options (See Table IV)	PHM Size (See Table I)
	31 - Solder *41* - Crimp	*A* - Non-Environmental; Supplied with Backshell Only *R* - Environmental; Supplied with Backshell and Grommet	*P* - Pin *S* - Socket		

XX	ITS	31	030	A	FP	20-27	P	Y	XX	PHM11	XXX

Reverse Bayonet Coupling *ITS* - Alumium Shell with Stainless Steel Studs *ITB* - Marine Bronze or Stainless Steel Shell without Stainless Steel Studs For further details, see diagram on page A-38	*030* - Rear Wall Mount	Mounting Holes *FP* - Through Mounting Holes *OMIT* - For Threaded Mounting Holes	Shell Size and Insert Arrangement (See Section A)	Alternate Insert Rotation (W, X, Y, Z) Omit for Normal (See Section A)		Mod Code Option (See Table II)

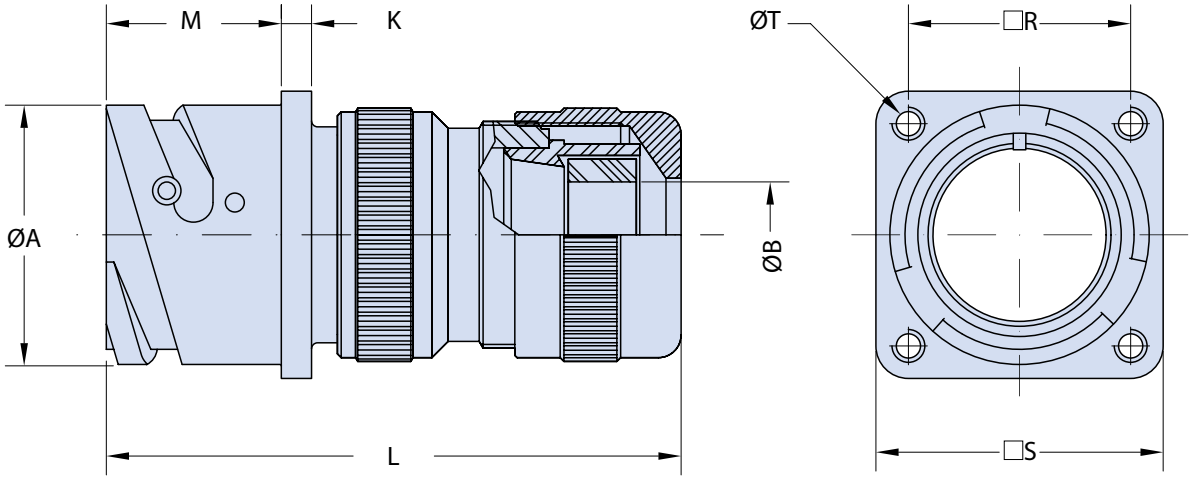

Application Notes

1. Rear panel mount square flange receptacle with a PHM backshell. Threaded mounting holes. Optional non-threaded through mounting holes available.
2. Connector/Backshell Class "A" (non-environmental)—Not supplied with wire sealing grommet; Class "R" (environmental)—Supplied with grommet.
3. Standard materials configuration consists of aluminum alloy. For platings, see TABLE II finish options.
4. Standard contact material consists of copper alloy with silver plating or gold plating available.

© 2015 Glenair, Inc. U.S. CAGE Code 06324 Printed in Italy

Downloaded from Arrow.com.

ITS 31030 A PHM and ITS 31030 R PHM
ITS 41030 A PHM and ITS 41030 R PHM
Rear Panel Mount Square Flange Receptacle Assembly
with Environmental PHM Backshell

TABLE I: DIMENSIONS

Shell Size	PHM Size	ØA +0.2 -0.1	ØB Min. - Max.	K ±0.2	L Max.	M +0.2 -0	R ±0.2	S ±0.2	T Thread
10 SL	9	18.2	2 - 9	2.8	69.5	18.4	18.25	25.4	M4
14 S	11	24.5	2 - 11	3.2	72.0	18.4	23.00	30.4	M4
16 S	11	27.2	2 - 11	3.2	72.0	18.4	24.60	32.5	M4
16	11	27.2	2 - 11	3.2	80.5	23.2	24.60	32.5	M4
18	11 / 18	30.7	2 - 11 / 2 - 16.5	4.0	80.5	23.2	27.00	35.0	M4
20	11 / 18	34.0	2 - 11 / 2 - 16.5	4.0	82.5	23.2	29.40	38.0	M4
22	18	37.3	2 - 16.5	4.0	82.5	23.2	31.75	41.0	M4
24	18 / 22/ 24	40.9	2 - 16.5 / 15 - 20 / 19 - 24	4.0	85.5	23.2	34.90	44.5	M4
28	18 / 22/ 24	46.7	2 - 16.5 / 15 - 20 / 19 - 24	4.0	93.0	24.2	39.70	50.9	M5
32	22/ 24	53.4	15 - 20 / 19 - 24	4.0	96.5	24.2	44.50	57.0	M5
36	35	59.6	23 - 35	4.0	108.0	24.2	49.20	63.5	M5
40	35	65.5	23 - 35	4.0	108.0	24.2	55.55	69.9	M5

For through mounting holes refer to page B-3.

TABLE II: MODIFICATION CODES

STANDARD MATERIAL AND FINISH (*)		
Sym	**Description**	**RoHS**
	Omit for Aluminum/ Cadmium Olive Drab	
F6	Aluminum/ Black Electrodeposited Paint	✓
F7	Aluminum/ Black Zinc Nickel	✓
F11	Aluminum/ Electroless Nickel	✓
MB	Marine Bronze/ Unplated	✓
FK	Stainless Steel/ Passivate	✓

TABLE III

ELASTOMER OPTIONS	
Sym	**Description**
	Omit for Polychloroprene Elastomer
FR	Fire Resistant Elastomer
S	Silicone Elastomer

TABLE IV: MODIFICATION CODES

CONTACT OPTIONS	
Sym	**Description**
B0	Connector without Contacts**
B1	Connector with Gold Plated Contacts
Omit for standard version (Silver plated)	

(*) For further options, please contact the factory.

(**) Crimp Contacts Only

© 2015 Glenair, Inc.

Downloaded from Arrow.com.

ITS 31030 A PMH-EMI67 and ITS 41030 A PMH-EMI67
Rear Panel Mount Square Flange Receptacle Assembly
with EMI/RFI PHM Cable Clamp

Elastomer Option (See Table III)	Contact Type *31* - Solder *41* - Crimp	Connector/Backshell Class *A* - Non-Environmental; Supplied with Backshell Only	Contact Gender *P* - Pin *S* - Socket	Alternate Insert Rotation (W, X, Y, Z) Omit for Normal (See Section A)	PHM Size (See Table I)

XX ITS 31 030 A FP 20-27 P Y XX PHM18EMI67 XXX

Reverse Bayonet Coupling *ITS* - Alumium Shell with Stainless Steel Studs *ITB* - Marine Bronze or Stainless Steel Shell without Stainless Steel Studs For further details, see diagram on page A-38	*030* - Rear Wall Mount	Mounting Holes *FP* - Through Mounting Holes *OMIT* - For Threaded Mounting Holes	Shell Size and Insert Arrangement (See Section A)	Contact Options (See Table IV)	Mod Code Option (See Table II)

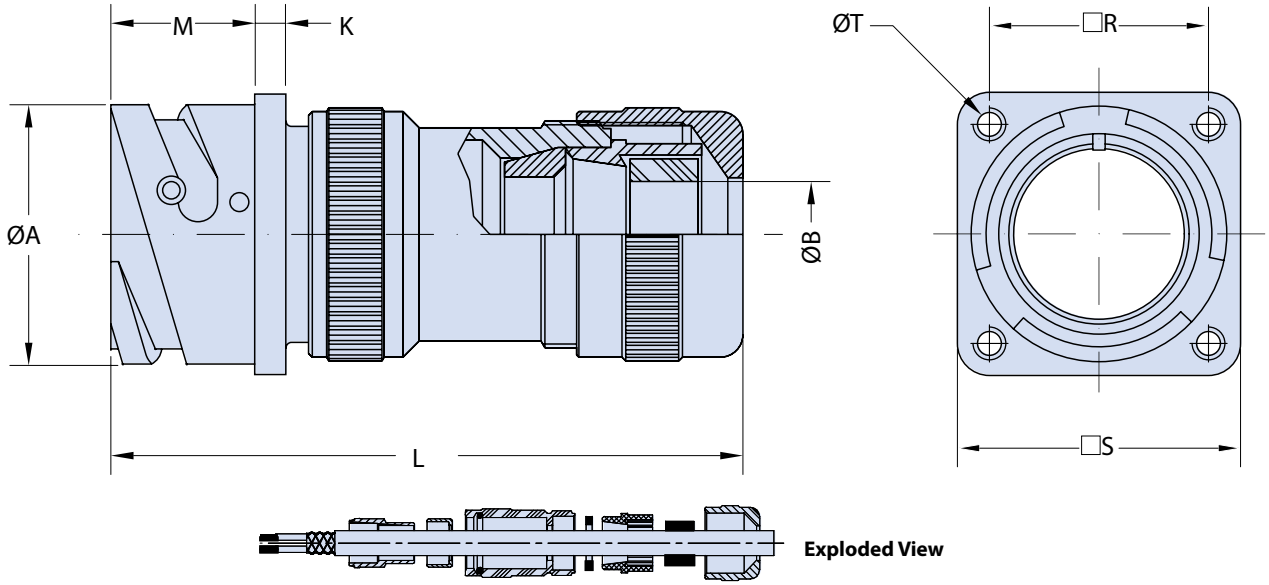

Application Notes

1. Rear panel mount square flange receptacle with an EMI/RFI PHM backshell. Threaded mounting holes. Optional non-threaded mounting holes available.
2. Connector/Backshell Class "A" (non-environmental)—No grommet supplied.
3. Standard materials configuration consists of aluminum alloy. For platings, see TABLE II finish options.
4. Standard contact material consists of copper alloy with silver plating or gold plating.

© 2015 Glenair, Inc. U.S. CAGE Code 06324 Printed in Italy

Downloaded from Arrow.com.

ITS 31030 A PMH-EMI67 and ITS 41030 A PMH-EMI67
Rear Panel Mount Square Flange Receptacle Assembly
with EMI/RFI PHM Cable Clamp

TABLE I: DIMENSIONS

Shell Size	PHM Size	ØA +0.2 -0.1	ØB Min. - Max.	K ±0.2	L Max.	M +0.2 -0	R ±0.2	S ±0.2	T Thread
10 SL	9	18.2	2 - 9	2.8	79.0	18.4	18.25	25.4	M4
14 S	11	24.5	2 - 11	3.2	93.5	18.4	23.00	30.4	M4
16 S	11	27.2	2 - 11	3.2	93.5	18.4	24.60	32.5	M4
16	11	27.2	2 - 11	3.2	101.0	23.2	24.60	32.5	M4
18	11/18	30.7	2 - 11/ 2 - 16.5	4.0	102.5	23.2	27.00	35.0	M4
20	11/18	34.0	2 - 11 /2 - 16.5	4.0	105.0	23.2	29.40	38.0	M4
22	18	37.3	2 - 16.5	4.0	105.0	23.2	31.75	41.0	M4
24	18/22	40.9	2 - 16.5 /15 - 20	4.0	106.0	23.2	34.90	44.5	M4
28	22	46.7	15 - 20	4.0	113.0	24.2	39.70	50.9	M5
32	24	53.4	19 - 24	4.0	114.0	24.2	44.50	57.0	M5
36	35	59.6	23 - 35	4.0	120.0	24.2	49.20	63.5	M5
40	35	65.5	23 - 35	4.0	120.0	24.2	55.55	69.9	M5

For through mounting holes refer to page B-3.

TABLE II: MODIFICATION CODES

STANDARD MATERIAL AND FINISH (*)		
Sym	**Description**	**RoHS**
	Omit for Aluminum/ Cadmium Olive Drab	
F7	Aluminum/ Black Zinc Nickel	✓
F11	Aluminum/ Electroless Nickel	✓
MB	Marine Bronze/ Unplated	✓
FK	Stainless Steel/ Passivate	✓

TABLE III

ELASTOMER OPTIONS	
Sym	**Description**
	Omit for Polychloroprene Elastomer
FR	Fire Resistant Elastomer
S	Silicone Elastomer

TABLE IV: MODIFICATION CODES

CONTACT OPTIONS	
Sym	**Description**
B0	Connector without Contacts**
B1	Connector with Gold Plated Contacts
Omit for standard version (Silver plated)	

(*) For further options, please contact the factory.

(**) Crimp Contacts Only

© 2015 Glenair, Inc. U.S. CAGE Code 06324 Printed in Italy

Downloaded from Arrow.com.

ITS 31030 F and ITS 41030 F
Rear Panel Mount Square Flange Receptacle Assembly
with Class A IT3057 Cable Clamp and Polychloroprene Bushing

XX	ITS	31	030	F	FP	20-27	P	Y	XXX
Elastomer Option (See Table III)	Reverse Bayonet Coupling *ITS* - Alumium Shell with Stainless Steel Studs *ITB* - Marine Bronze or Stainless Steel Shell without Stainless Steel Studs For further details, see diagram on page A-38	Contact Type *31* - Solder *41* - Crimp	*030* - Rear Wall Mount	Connector/Backshell Class *F* - Environmental; Supplied with Grommet, Cable Clamp and Polychloroprene Bushing	Mounting Holes *FP* - Through Mounting Holes *OMIT* - For Threaded Mounting Holes	Shell Size and Insert Arrangement (See Section A)	Contact Gender *P* - Pin *S* - Socket	Alternate Insert Rotation (W, X, Y, Z) Omit for Normal (See Section A)	Mod Code Option (See Table II)

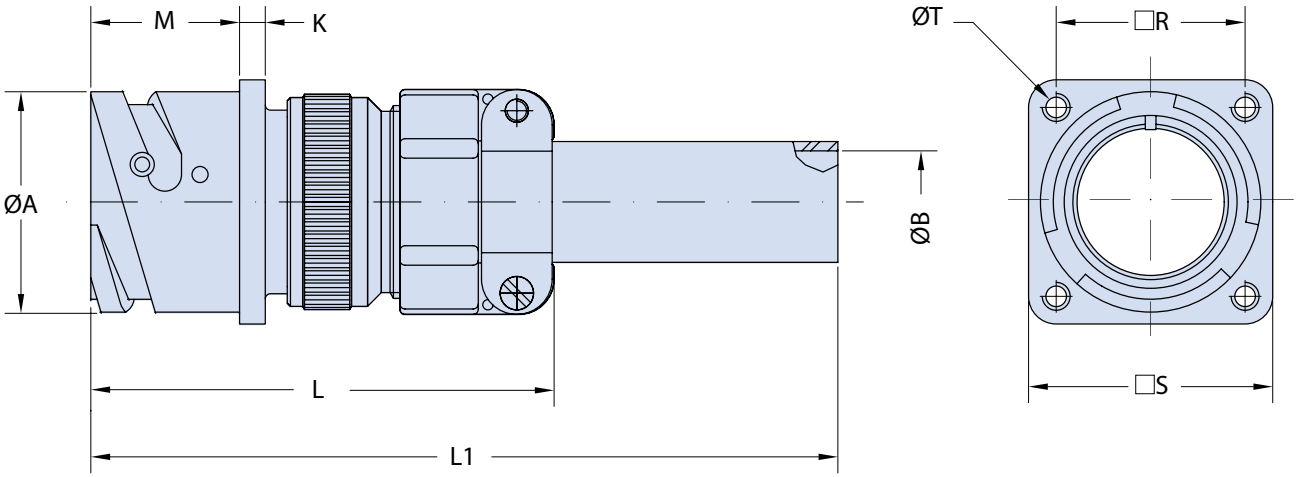

Application Notes

1. Rear panel mount square flange receptacle assembly with an insulating grommet, environmental backshell, class A IT3057 cable clamp for use with individual wires and a polychloroprene bushing. Threaded mounting holes. Optional non-threaded mounting holes available.
2. Connector/Backshell Class "F" (environmental)—Insulating grommet supplied.
3. Standard materials configuration consists of aluminum alloy. For platings, see TABLE II finish options.
4. Standard contact material consists of copper alloy with silver plating or gold plating.

© 2015 Glenair, Inc. U.S. CAGE Code 06324 Printed in Italy

Downloaded from Arrow.com.

ITS 31030 F and ITS 41030 F
Rear Panel Mount Square Flange Receptacle Assembly
with Class A IT3057 Cable Clamp and Polychloroprene Bushing

TABLE I: DIMENSIONS

Shell Size	ØA +0.2 -0.1	ØB ±0.1	K ±0.2	L Max.	L1 Max.	M +0.2 -0	R ±0.2	S ±0.2	T Thread
10 SL	18.2	5.58	2.8	61.5	119.5	18.4	18.25	25.4	M4
14 S	24.5	7.92	3.2	65.5	119.5	18.4	23.00	30.4	M4
16 S	27.2	11.09	3.2	67.0	119.5	18.4	24.60	32.5	M4
16	27.2	11.09	3.2	75.5	124.0	23.2	24.60	32.5	M4
18	30.7	14.27	4.0	75.5	124.0	23.2	27.00	35.0	M4
20	34.0	15.87	4.0	77.5	124.0	23.2	29.40	38.0	M4
22	37.3	15.87	4.0	77.5	124.0	23.2	31.75	41.0	M4
24	40.9	19.05	4.0	79.0	124.0	23.2	34.90	44.5	M4
28	46.7	19.05	4.0	86.5	124.0	24.2	39.70	50.9	M5
32	53.4	23.79	4.0	88.0	124.0	24.2	44.50	57.0	M5
36	59.6	31.75	4.0	96.5	126.5	24.2	49.20	63.5	M5
40	65.5	34.92	4.0	110.5	126.5	24.2	55.55	69.9	M5

For through mounting holes refer to page B-3.

TABLE II: MODIFICATION CODES

CONTACT OPTIONS		
Sym	**Description**	
B0	Connector without Contacts**	
B1	Connector with Gold Plated Contacts	
Omit for standard version (Silver plated)		
STANDARD MATERIAL AND FINISH (*)		
Sym	**Description**	**RoHS**
	Omit for Aluminum/ Cadmium Olive Drab	
F6	Aluminum/ Black Electrodeposited Paint	✓
F7	Aluminum/ Black Zinc Nickel	✓
F11	Aluminum/ Electroless Nickel	✓

(*) For further options, please contact the factory.

(**) Crimp Contacts Only

TABLE III

ELASTOMER OPTIONS	
Sym	**Description**
	Omit for Polychloroprene Elastomer
FR	Fire Resistant Elastomer
S	Silicone Elastomer

© 2015 Glenair, Inc.

Downloaded from Arrow.com.

ITS 31030 A N5 and ITS 31030 R N5
ITS 41030 A N5 and ITS 41030 R N5
Rear Panel Mount Square Flange Receptacle Assembly
with Class C (Environmental) IT3057 Cable Clamp

XX	ITS	31	030	A	FP	20-27	P	Y	XX	N5	XXX
Elastomer Option (See Table III)	Reverse Bayonet Coupling *ITS* - Alumium Shell with Stainless Steel Studs *ITB* - Marine Bronze or Stainless Steel Shell without Stainless Steel Studs For further details, see diagram on page A-38	Contact Type *31* - Solder *41* - Crimp	*030* - Rear Wall Mount	Connector/Backshell Class *A* - Non-Environmental; Supplied with Backshell Only *R* - Environmental; Supplied with Backshell and Grommet	Mounting Holes *FP* - Through Mounting Holes *OMIT* - For Threaded Mounting Holes	Shell Size and Insert Arrangement (See Section A)	Contact Gender *P* - Pin *S* - Socket	Alternate Insert Rotation (W, X, Y, Z) Omit for Normal (See Section A)	Contact Options (See Table IV)	Class "C" Environmental Cable Clamp	Mod Code Option (See Table II)

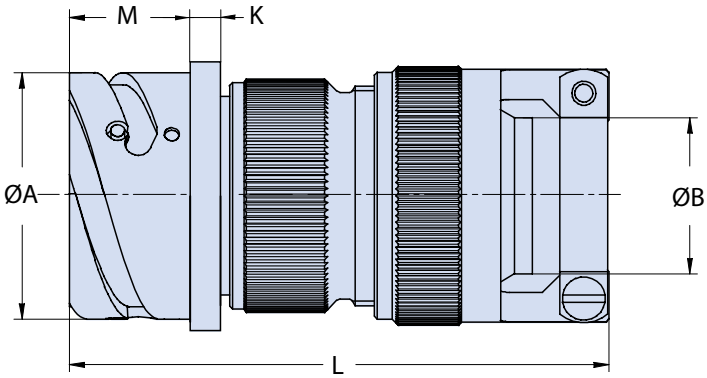

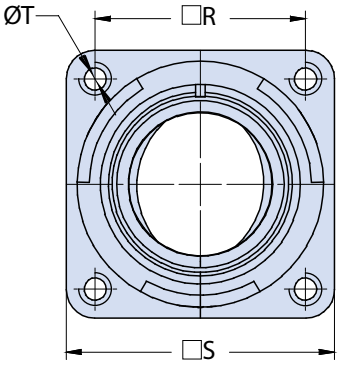

Application Notes

1. Rear panel mount square flange receptacle with a class C (environmental) IT3057 cable clamp for use with jacketed cable. Threaded mounting holes.
2. Connector/Backshell Class "A" (non-environmental)—Not supplied with wire sealing grommet; Class "R" (environmental)—Supplied with grommet.
3. Standard materials configuration consists of aluminum alloy. For platings, see TABLE II finish options.
4. Standard contact material consists of copper alloy with silver plating or gold plating.

© 2015 Glenair, Inc. U.S. CAGE Code 06324 Printed in Italy

Downloaded from Arrow.com.

ITS 31030 A N5 and ITS 31030 R N5
ITS 41030 A N5 and ITS 41030 R N5
Rear Panel Mount Square Flange Receptacle Assembly
with Class C (Environmental) IT3057 Cable Clamp

TABLE I: DIMENSIONS

Shell Size	ØA +0.2 -0.1	ØB		K ±0.2	L Max.	M +0.2 -0	R ±0.2	S ±0.2	T Thread
		Open	Closed						
10 SL	18.2	7.93	2.38	2.8	78.4	18.4	18.25	25.4	M4
14 S	24.5	11.12	5.84	3.2	81.2	18.4	23.00	30.4	M4
16 S	27.2	13.48	8.00	3.2	78.2	18.4	24.60	32.5	M4
16	27.2	13.48	8.00	3.2	87.2	23.2	24.60	32.5	M4
18	30.7	15.87	9.60	4.0	90.0	23.2	27.00	35.0	M4
20	34.0	19.00	11.30	4.0	94.2	23.2	29.40	38.0	M4
22	37.3	19.00	11.30	4.0	92.0	23.2	31.75	41.0	M4
24	40.9	23.80	15.50	4.0	96.3	23.2	34.90	44.5	M4
28	46.7	23.80	15.50	4.0	107.0	24.2	39.70	50.9	M5
32	53.4	31.75	23.40	4.0	113.2	24.2	44.50	57.0	M5
36	59.6	35.00	23.40	4.0	125.2	24.2	49.20	63.5	M5
40	65.5	41.25	29.90	4.0	125.2	24.2	55.55	69.9	M5

For through mounting holes refer to page B-3.

TABLE II: MODIFICATION CODES

STANDARD MATERIAL AND FINISH (*)		
Sym	**Description**	**RoHS**
	Omit for Aluminum/ Cadmium Olive Drab	
F6	Aluminum/ Black Electrodeposited Paint	✓
F7	Aluminum/ Black Zinc Nickel	✓
F11	Aluminum/ Electroless Nickel	✓
MB	Marine Bronze/ Unplated	✓
FK	Stainless Steel/ Passivate	✓

TABLE III

ELASTOMER OPTIONS	
Sym	**Description**
	Omit for Polychloroprene Elastomer
FR	Fire Resistant Elastomer
S	Silicone Elastomer

TABLE IV: MODIFICATION CODES

CONTACT OPTIONS	
Sym	**Description**
B0	Connector without Contacts**
B1	Connector with Gold Plated Contacts
Omit for standard version (Silver plated)	

(*) For further options, please contact the factory.

(**) Crimp Contacts Only

© 2015 Glenair, Inc. U.S. CAGE Code 06324 Printed in Italy

Downloaded from Arrow.com.

ITS 31030 G and ITS 41030 G
Rear Panel Mount Square Flange Receptacle Assembly
with Environmental Backshell for Heat Shrink Tubing

XX	ITS	31	030	G	FP	20-27	P	Y	XXX
Elastomer Option (See Table III)	Reverse Bayonet Coupling *ITS* - Alumium Shell with Stainless Steel Studs *ITB* - Marine Bronze or Stainless Steel Shell without Stainless Steel Studs For further details, see diagram on page A-38	Contact Type *31* - Solder *41* - Crimp	*030* - Rear Wall Mount	Connector/Backshell Class *G* - Environmental; Supplied with Grommet, and Backshell for Heat Shrink Tubing	Mounting Holes *FP* - Through Mounting Holes *OMIT* - For Threaded Mounting Holes	Shell Size and Insert Arrangement (See Section A)	Contact Gender *P* - Pin *S* - Socket	Alternate Insert Rotation (W, X, Y, Z) Omit for Normal (See Section A)	Mod Code Option (See Table II)

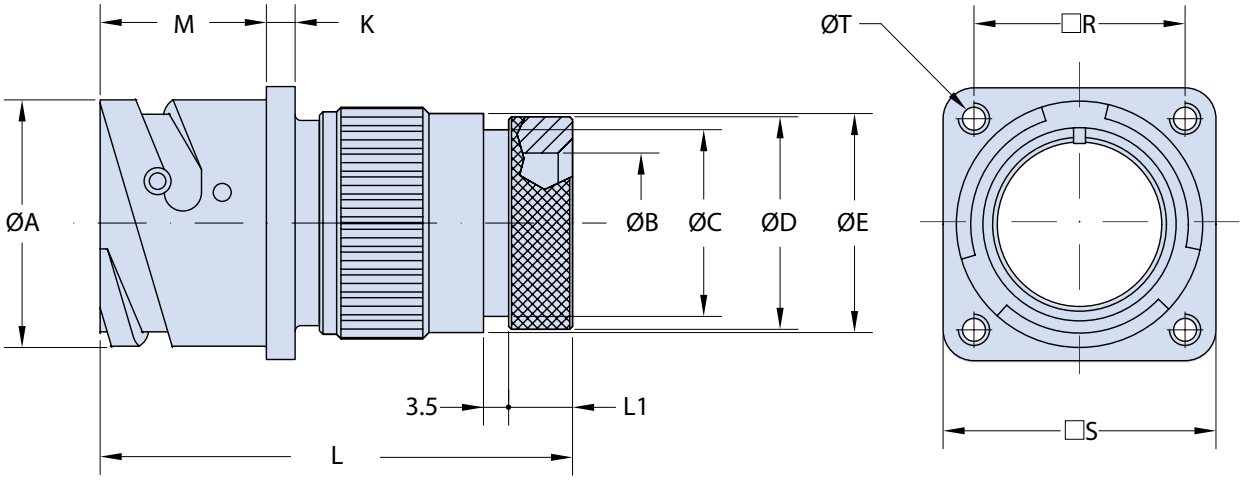

Application Notes

1. Rear panel mount square flange receptacle assembly with a backshell for heat shrink tubing. Threaded mounting holes. Optional non-threaded mounting holes available.
2. Connector/Backshell Class "G" (environmental)—Wire sealing grommet supplied.
3. Standard materials configuration consists of aluminum alloy. For platings, see TABLE II finish options.
4. Standard contact material consists of copper alloy with silver plating or gold plating.

© 2015 Glenair, Inc. U.S. CAGE Code 06324 Printed in Italy

Downloaded from Arrow.com.

ITS 31030 G and ITS 41030 G
Rear Panel Mount Square Flange Receptacle Assembly
with Environmental Backshell for Heat Shrink Tubing

TABLE I: DIMENSIONS

Shell Size	ØA +0.2 -0.1	ØB Min.	ØC ±0.1	ØD ±0.2	ØE ±0.2	K ±0.2	L Max.	L1 Max.	M +0.2 -0	R ±0.2	S ±0.2	T Thread
10 SL	18.2	8.5	13.0	15.5	17.0	2.8	58.0	8.2	18.4	18.25	25.4	M4
14 S	24.5	12.0	16.5	19.1	20.1	3.2	58.5	8.2	18.4	23.00	30.4	M4
16 S	27.2	14.5	21.5	23.9	23.5	3.2	58.5	8.2	18.4	24.60	32.5	M4
16	27.2	14.5	21.5	23.9	23.5	3.2	68.5	8.0	23.2	24.60	32.5	M4
18	30.7	17.5	21.7	23.9	26.5	4.0	68.5	8.0	23.2	27.00	35.0	M4
20	34.0	19.5	26.0	29.6	30.5	4.0	70.5	8.9	23.2	29.40	38.0	M4
22	37.3	22.0	26.0	29.6	33.6	4.0	70.5	8.9	23.2	31.75	41.0	M4
24	40.9	25.0	34.5	37.8	36.1	4.0	70.5	9.2	23.2	34.90	44.5	M4
28	46.7	29.0	34.5	37.8	41.4	4.0	70.5	9.2	24.2	39.70	50.9	M5
32	53.4	34.0	43.6	47.8	48.6	4.0	86.0	11.7	24.2	44.50	57.0	M5
36	59.6	38.5	43.6	47.8	54.8	4.0	86.0	11.7	24.2	49.20	63.5	M5
40	65.5	48.0	51.5	52.4	60.9	4.0	86.0	11.7	24.2	55.55	69.9	M5

For through mounting holes refer to page B-3.

TABLE II: MODIFICATION CODES

CONTACT OPTIONS		
Sym	**Description**	
B0	Connector without Contacts**	
B1	Connector with Gold Plated Contacts	
Omit for standard version (Silver plated)		
STANDARD MATERIAL AND FINISH (*)		
Sym	**Description**	**RoHS**
	Omit for Aluminum/ Cadmium Olive Drab	
F6	Aluminum/ Black Electrodeposited Paint	✓
F7	Aluminum/ Black Zinc Nickel	✓
F11	Aluminum/ Electroless Nickel	✓
MB	Marine Bronze/ Unplated	✓
FK	Stainless Steel/ Passivate	✓

(*) For further options, please contact the factory.

(**) Crimp Contacts Only

TABLE III

ELASTOMER OPTIONS	
Sym	**Description**
	Omit for Polychloroprene Elastomer
FR	Fire Resistant Elastomer
S	Silicone Elastomer

© 2015 Glenair, Inc. U.S. CAGE Code 06324 Printed in Italy

Downloaded from Arrow.com.

ITS 31030 GR and ITS 41030 GR
Rear Panel Mount Square Flange Receptacle Assembly
with Rotating Coupling Nut Backshell for Heat-Shrink Tubing

XX	ITS	31	030	GR	FP	20-27	P	Y	XXX
Elastomer Option (See Table III)	Reverse Bayonet Coupling *ITS* - Alumium Shell with Stainless Steel Studs *ITB* - Marine Bronze or Stainless Steel Shell without Stainless Steel Studs For further details, see diagram on page A-38	Contact Type *31* - Solder *41* - Crimp	*030* - Rear Wall Mount	Connector/Backshell Class *GR* - Environmental; Supplied with Backshell for Heat Shrink Tubing and Rotating Clamp Nut	Mounting Holes *FP* - Non-Threaded Through Mounting Holes *OMIT*- For Standard (Threaded) Mounting Holes	Shell Size and Insert Arrangement (See Section A)	Contact Gender *P* - Pin *S* - Socket	Alternate Insert Rotation (W, X, Y, Z) Omit for Normal (See Section A)	Mod Code Option (See Table II)

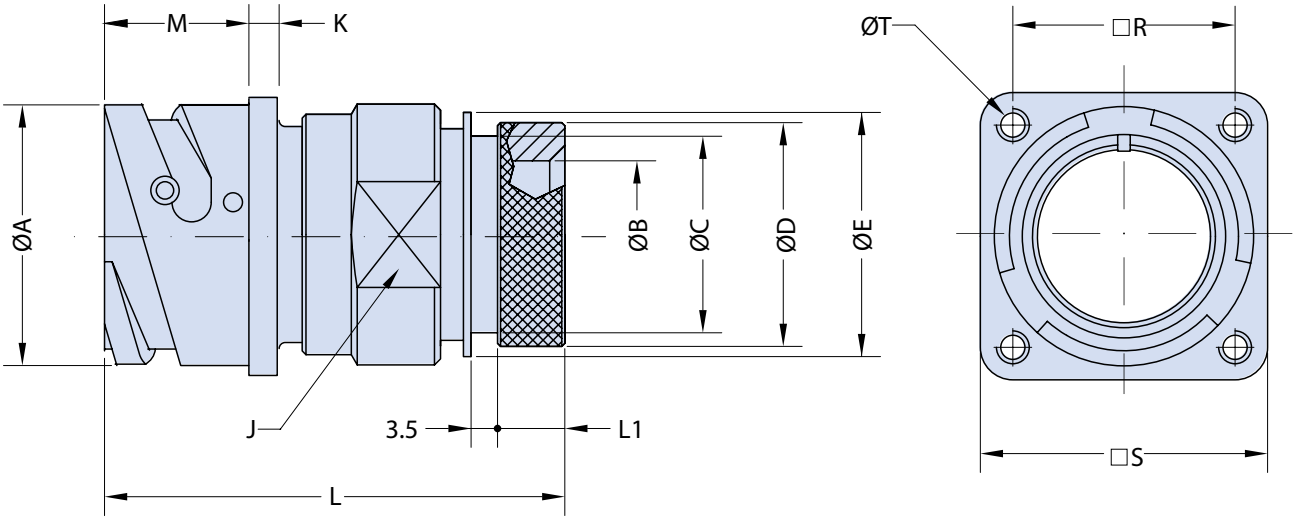

Application Notes

1. Rear panel mount square flange receptacle with backshell for heat-shrink tubing.
   Rotating coupling nut supplied. Threaded mounting holes. Optional non-threaded mounting holes available.
2. Environmental class "GR" (environmental)—Wire sealing grommet supplied.
3. Standard materials configuration consists of aluminum alloy. For platings, see TABLE II finish options.
4. Standard contact material consists of copper alloy with silver plating or gold plating.

© 2015 Glenair, Inc. U.S. CAGE Code 06324 Printed in Italy

Downloaded from Arrow.com.

ITS 31030 GR and ITS 41030 GR
Rear Panel Mount Square Flange Receptacle Assembly
with Rotating Coupling Nut Backshell for Heat-Shrink Tubing

TABLE I: DIMENSIONS

Shell Size	ØA +0.2 -0.1	ØB Min.	ØC ±0.1	ØD ±0.2	ØE ±0.1	J key	K ±0.2	L Max.	L1 ±0.1	M +0.2 -0	R ±0.2	S ±0.2	T Thread
10 SL	18.2	8.6	13.0	15.5	17.0	20	2.8	59.0	8.2	18.4	18.25	25.4	M4
14 S	24.5	10.7	16.5	19.1	20.1	23	3.2	59.0	8.2	18.4	23.00	30.4	M4
16 S	27.2	14.0	24.9	23.9	23.5	26	3.2	59.0	8.0	18.4	24.60	32.5	M4
16	27.2	14.0	24.9	23.9	23.5	26	3.2	64.0	8.0	23.2	24.60	32.5	M4
18	30.7	17.5	21.7	23.9	26.5	28	4.0	66.5	8.0	23.2	27.00	35.0	M4
20	34.0	18.8	26.2	29.6	30.2	32	4.0	67.0	8.9	23.2	29.40	38.0	M4
22	37.3	21.0	26.2	29.6	33.6	36	4.0	67.0	9.2	23.2	31.75	41.0	M4
24	40.9	25.4	34.0	37.8	36.1	39	4.0	70.0	9.5	23.2	34.90	44.5	M4
28	46.7	28.4	34.3	37.8	41.4	46	4.0	70.0	9.2	24.2	39.70	50.9	M5
32	53.4	34.0	43.6	47.8	48.6	52	4.0	72.0	11.7	24.2	44.50	57.0	M5
36	59.6	40.5	43.6	47.8	54.0	58	4.0	72.0	11.5	24.2	49.20	63.5	M5
40	65.5	49.0	52.6	57.8	61.0	65	4.0	72.0	11.5	24.2	55.55	69.9	M5

For through mounting holes refer to page B-3.

TABLE II: MODIFICATION CODES

CONTACT OPTIONS		
Sym	**Description**	
B0	Connector without Contacts**	
B1	Connector with Gold Plated Contacts	
Omit for standard version (Silver plated)		
STANDARD MATERIAL AND FINISH (*)		
Sym	**Description**	**RoHS**
	Omit for Aluminum/ Cadmium Olive Drab	
F6	Aluminum/ Black Electrodeposited Paint	✓
F7	Aluminum/ Black Zinc Nickel	✓
F11	Aluminum/ Electroless Nickel	✓
MB	Marine Bronze/ Unplated	✓
FK	Stainless Steel/ Passivate	✓

(*) For further options, please contact the factory.

(**) Crimp Contacts Only

TABLE III

ELASTOMER OPTIONS	
Sym	**Description**
	Omit for Polychloroprene Elastomer
FR	Fire Resistant Elastomer
S	Silicone Elastomer

© 2015 Glenair, Inc. U.S. CAGE Code 06324 Printed in Italy

Downloaded from Arrow.com.

ITS 31030 RS and ITS 41030 RS
Rear Panel Mount Square Flange Receptacle Assembly
with Lipped Backshell

XX	ITS	31	030	RS	FP	20-27	P	Y	XXX

- **XX** — Elastomer Option (See Table III)
- **ITS** — Reverse Bayonet Coupling
  ITS - Alumium Shell with Stainless Steel Studs
  ITB - Marine Bronze or Stainless Steel Shell without Stainless Steel Studs
  For further details, see diagram on page A-38
- **31** — Contact Type
  31 - Solder
  41 - Crimp
- **030** — *030* - Rear Wall Mount
- **RS** — Connector/Backshell Class
  RS - Environmental; Supplied with Grommet and Lipped Backshell
- **FP** — Mounting Holes
  FP - Non-Threaded Through Mounting Holes
  OMIT- For Standard (Threaded) Mounting Holes
- **20-27** — Shell Size and Insert Arrangement (See Section A)
- **P** — Contact Gender
  P - Pin
  S - Socket
- **Y** — Alternate Insert Rotation (W, X, Y, Z) Omit for Normal (See Section A)
- **XXX** — Mod Code Option (See Table II)

B

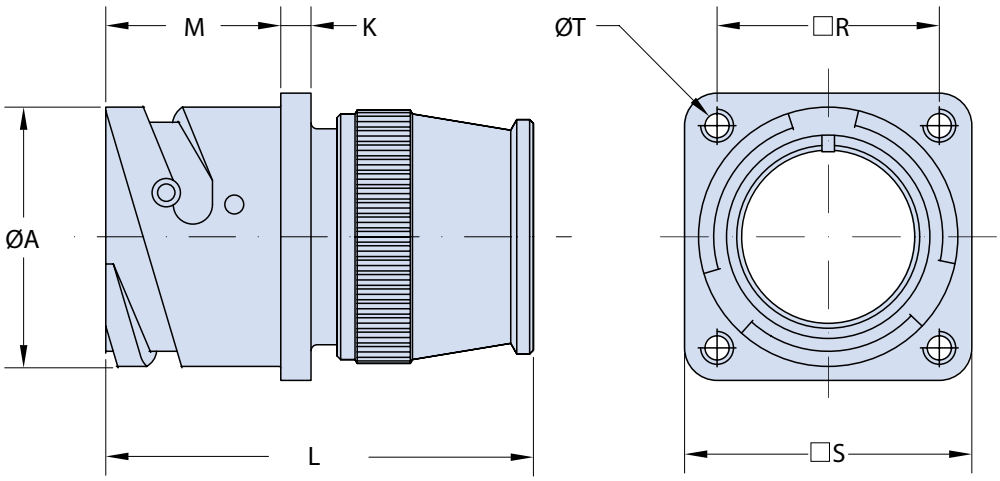

Application Notes

1. Rear panel mount square flange receptacle with a wire sealing grommet and backshell for use with individual wire assemblies. Threaded mounting holes. Optional non-threaded mounting holes available.
2. Connector/backshell Class "RS" (environmental)—Wire sealing grommet supplied.
3. Standard materials configuration consists of aluminum alloy. For platings, see TABLE II finish options.
4. Standard contact material consists of copper alloy with silver plating or gold plating.

© 2015 Glenair, Inc. U.S. CAGE Code 06324 Printed in Italy

Downloaded from Arrow.com.

ITS 31030 RS and ITS 41030 RS
Rear Panel Mount Square Flange Receptacle Assembly
with Lipped Backshell

TABLE I: DIMENSIONS

Shell Size	ØA +0.2 -0.1	K ±0.2	L Max.	M +0.2 -0	R ±0.2	S ±0.2	T Thread
10 SL	18.2	2.8	49.5	18.4	18.25	25.4	M4
14 S	24.5	3.2	53.5	18.4	23.00	30.4	M4
16 S	27.2	3.2	53.5	18.4	24.60	32.5	M4
16	27.2	3.2	60.0	23.2	24.60	32.5	M4
18	30.7	4.0	60.0	23.2	27.00	35.0	M 4
20	34.0	4.0	62.0	23.2	29.40	38.0	M4
22	37.3	4.0	62.0	23.2	31.75	41.0	M4
24	40.9	4.0	62.0	23.2	34.90	44.5	M4
28	46.7	4.0	62.0	24.2	39.70	50.9	M5
32	53.4	4.0	62.5	24.2	44.50	57.0	M5
36	59.6	4.0	62.5	24.2	49.20	63.5	M5
40	65.5	4.0	62.5	24.2	55.55	69.9	M5

For through mounting holes refer to page B-3.

TABLE II: MODIFICATION CODES

CONTACT OPTIONS		
Sym	**Description**	
B0	Connector without Contacts**	
B1	Connector with Gold Plated Contacts	
Omit for standard version (Silver plated)		
STANDARD MATERIAL AND FINISH (*)		
Sym	**Description**	**RoHS**
	Omit for Aluminum/ Cadmium Olive Drab	
F6	Aluminum/ Black Electrodeposited Paint	✓
F7	Aluminum/ Black Zinc Nickel	✓
F11	Aluminum/ Electroless Nickel	✓
MB	Marine Bronze/ Unplated	✓
FK	Stainless Steel/ Passivate	✓

(*) For further options, please contact the factory.
(**) Crimp Contacts Only

TABLE III

ELASTOMER OPTIONS	
Sym	**Description**
	Omit for Polychloroprene Elastomer
FR	Fire Resistant Elastomer
S	Silicone Elastomer

© 2015 Glenair, Inc. U.S. CAGE Code 06324 Printed in Italy

Downloaded from Arrow.com.

ITS 31030 SP and ITS 41030 SP
Rear Panel Mount Square Flange Receptacle Assembly
with Environmental Backshell for EMI/RFI Shield Termination

XX	ITS	31	030	SP	FP	20-27	P	Y	XXX
Elastomer Option (See Table III)	Reverse Bayonet Coupling *ITS* - Alumium Shell with Stainless Steel Studs *ITB* - Marine Bronze or Stainless Steel Shell without Stainless Steel Studs For further details, see diagram on page A-38	Contact Type *31* - Solder *41* - Crimp	*030* - Rear Wall Mount	Connector/Backshell Class *SP* - Environmental; Supplied with Grommet and EMI/RFI Backshell	Mounting Holes *FP* - Non-Threaded Through Mounting Holes *OMIT* - For Standard (Threaded) Mounting Holes	Shell Size and Insert Arrangement (See Section A)	Contact Gender *P* - Pin *S* - Socket	Alternate Insert Rotation (W, X, Y, Z) Omit for Normal (See Section A)	Mod Code Option (See Table II)

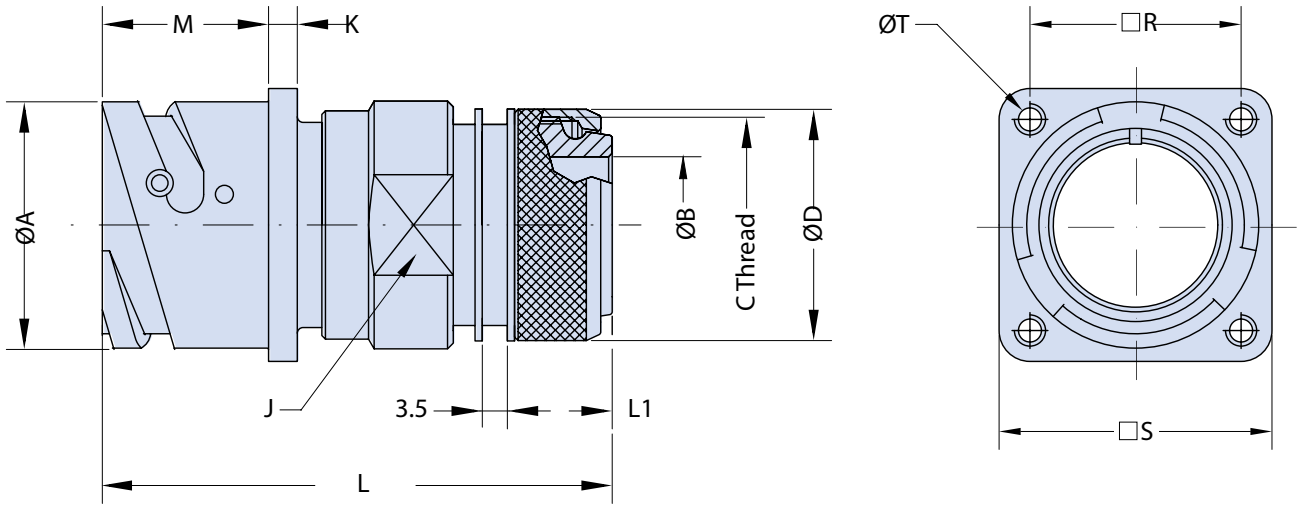

Application Notes

1. Rear panel mount square flange receptacle assembly with EMI/RFI Shield termination backshell. Backshell features rotating coupling nut and a "braid-trap" nut for termination of the braided shielding. Heat-shrink tubing may also be attached for additional environmental and mechanical protection. Threaded mounting holes. Optional non-threaded mounting holes available.
2. Connector/Backshell Class "SP" (environmental)—Wire sealing grommet supplied.
3. Standard materials configuration consists of aluminum alloy. For platings, see TABLE II finish options.
4. Standard contact material consists of copper alloy with silver plating or gold plating.

© 2015 Glenair, Inc. U.S. CAGE Code 06324 Printed in Italy

Downloaded from Arrow.com.

ITS 31030 SP and ITS 41030 SP
Rear Panel Mount Square Flange Receptacle Assembly
with Environmental Backshell for EMI/RFI Shield Termination

TABLE I: DIMENSIONS

Shell Size	ØA +0.2 -0.1	ØB Min.	C Thread	ØD ±0.2	J key	K ±0.2	L Max.	L1 Max.	M +0.2 -0	R ±0.2	S ±0.2	T Thread
10 SL	18.2	8.6	M16x1	18.5	20	2.8	61.0	14.0	18.4	18.25	25.4	M4
14 S	24.5	10.7	M20x1	22.3	23	3.2	61.0	14.0	18.4	23.00	30.4	M4
16 S	27.2	13.9	M23x1	25.3	26	3.2	62.0	15.6	18.4	24.60	32.5	M4
16	27.2	13.9	M23x1	25.3	26	3.2	70.0	15.6	23.2	24.60	32.5	M4
18	30.7	15.0	M26x1	28.0	28	4.0	71.0	14.6	23.2	27.00	35.0	M4
20	34.0	18.8	M30x1	32.3	32	4.0	72.5	14.6	23.2	29.40	38.0	M4
22	37.3	22.0	M32x1	34.3	36	4.0	72.5	14.6	23.2	31.75	41.0	M4
24	40.9	25.0	M36x1	38.3	39	4.0	72.5	14.6	23.2	34.90	44.5	M4
28	46.7	28.4	M39x1	41.2	46	4.0	73.5	14.6	24.2	39.70	50.9	M5
32	53.4	34.0	M45x1	48.3	52	4.0	74.0	14.6	24.2	44.50	57.0	M5
36	59.6	40.5	M52x1	55.0	58	4.0	74.0	15.0	24.2	49.20	63.5	M5
40	65.5	49.0	M59x1	62.0	65	4.0	74.0	15.5	24.2	55.55	69.9	M5

For through mounting holes refer to page B-3.

TABLE II: MODIFICATION CODES

CONTACT OPTIONS		
Sym	**Description**	
B0	Connector without Contacts**	
B1	Connector with Gold Plated Contacts	
Omit for standard version (Silver plated)		
STANDARD MATERIAL AND FINISH (*)		
Sym	**Description**	**RoHS**
	Omit for Aluminum/ Cadmium Olive Drab	
F7	Aluminum/ Black Zinc Nickel	✓
F11	Aluminum/ Electroless Nickel	✓
MB	Marine Bronze/ Unplated	✓
FK	Stainless Steel/ Passivate	✓

(*) For further options, please contact the factory.

(**) Crimp Contacts Only

TABLE III

ELASTOMER OPTIONS	
Sym	**Description**
	Omit for Polychloroprene Elastomer
FR	Fire Resistant Elastomer
S	Silicone Elastomer

© 2015 Glenair, Inc. U.S. CAGE Code 06324 Printed in Italy

Downloaded from Arrow.com.

ITS 31030 A ZL and ITS 31030 R ZL
ITS 41030 A ZL and ITS 41030 R ZL
Rear Panel Mount Square Flange Receptacle Assembly
with BAND-IT Backshell

XX	ITS	31	030	A	FP	20-27	P	Y	XX	ZL	XX	XXX
Elastomer Option (See Table V)	Reverse Bayonet Coupling *ITS* - Alumium Shell with Stainless Steel Studs *ITB* - Marine Bronze or Stainless Steel Shell without Stainless Steel Studs For further details, see diagram on page A-38	Contact Type *31* - Solder *41* - Crimp	*030* - Rear Wall Mount	Connector/Backshell Class *A* - Non-Environmental; Supplied with Backshell Only *R* - Environmental; Supplied with Backshell and Grommet	Mounting Holes *FP* - Through Mounting Holes *OMIT* - For Threaded Mounting Holes	Shell Size and Insert Arrangement (See Section A)	Contact Gender *P* - Pin *S* - Socket	Alternate Insert Rotation (W, X, Y, Z) Omit for Normal (See Section A)	Contact Options (See Table III)	BAND-IT Backshell *ZLF* - Supplied with Metallic Band	Entry Size (See Table II)	Finish Options (See Table IV)

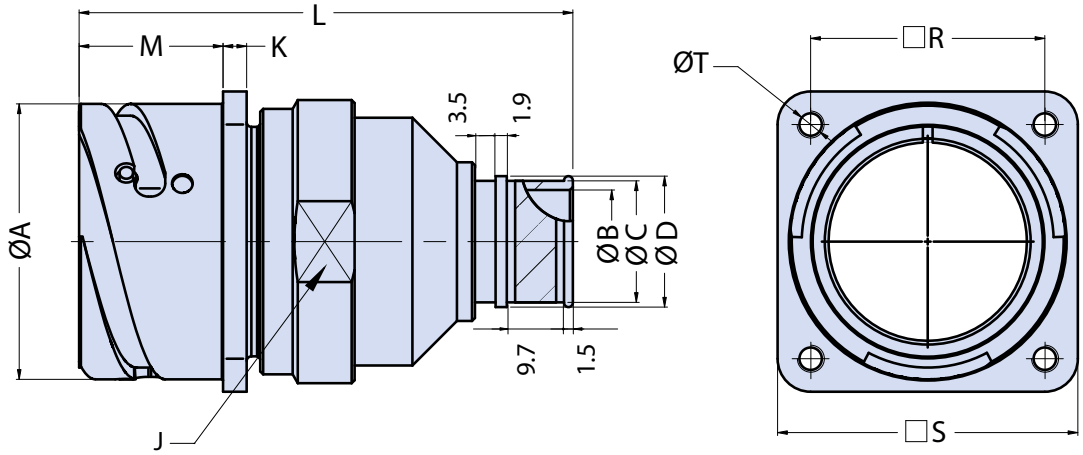

Application Notes

1. Rear panel mount square flange receptacle with backshell for attachment of BAND-IT. Threaded mounting holes. Optional non-threaded mounting holes available.
2. Connector/Backshell Class "A" (non-environmental)—Not supplied with wire sealing grommet; Class "R" (environmental)—Supplied with grommet.
3. Standard materials configuration consists of aluminum alloy. For platings, see TABLE IV finish options.
4. Standard contact material consists of copper alloy with silver plating or gold plating.

© 2015 Glenair, Inc. U.S. CAGE Code 06324 Printed in Italy

Downloaded from Arrow.com.

ITS 31030 A ZL and ITS 31030 R ZL
ITS 41030 A ZL and ITS 41030 R ZL
Rear Panel Mount Square Flange Receptacle Assembly
with BAND-IT Backshell

TABLE I: DIMENSIONS

Size	L Max.	M +0.2 -0	ØA +0.2 -0.1	J Key	K ±0.2	R ±0.2	S ±0.2	T Thread [b]	Entry Size [a]
10 SL	74.0	18.4	18.2	20	2.8	18.25	25.4	M4	01÷06
14 S	74.0	18.4	24.5	23	3.2	23.00	30.4	M4	03÷08
16 S	74.0	18.4	27.2	26	3.2	24.60	32.5	M4	05÷10
16	81.0	23.2	27.2	26	3.2	24.60	32.5	M4	05÷10
18	90.0	23.2	30.7	28	4.0	27.00	35.0	M4	07÷12
20	97.5	23.2	34.0	32	4.0	29.40	38.0	M4	09÷14
22	101.0	23.2	37.3	36	4.0	31.75	41.0	M4	11÷16
24	101.0	23.2	40.9	39	4.0	34.90	44.5	M4	12÷17
28	108.5	24.2	46.7	46	4.0	39.70	50.9	M5	13÷19
32	113.5	24.2	53.4	52	4.0	44.50	57.0	M5	17÷22
36	113.5	24.2	59.6	58	4.0	49.20	63.5	M5	19÷23
40	118.5	24.2	65.5	65	4.0	55.55	69.9	M5	21÷24

(a) For further entry size, please contact the factory. (b) For through mounting holes refer to page B-3.

TABLE II: ENTRY SIZE TABLE

Entry Size	ØB	ØC	ØD
01	3.2	6.4	7.9
02	4.8	7.9	9.5
03	6.4	9.5	11.1
04	7.9	11.1	12.7
05	9.5	12.7	14.3
06	11.1	14.3	15.8
07	12.7	15.9	17.4
08	14.3	17.5	19.1
09	15.9	19.1	20.6
10	17.5	20.6	22.2
11	19.1	22.2	23.8
12	20.6	23.8	25.4
13	22.2	25.4	27.0
14	23.8	27.0	28.5
15	25.4	28.6	30.1
16	27.0	30.2	31.8
17	28.6	31.8	33.3
18	31.8	34.9	36.5
19	34.9	38.1	39.7
20	38.1	41.3	42.8
21	41.3	44.5	46.0
22	44.5	47.6	49.2
23	47.6	50.8	52.4
24	50.8	54.0	55.5

TABLE III: MODIFICATION CODES

CONTACT OPTIONS	
Sym	**Description**
B0	Connector without Contacts**
B1	Connector with Gold Plated Contacts
Omit for standard version (Silver plated)	

TABLE IV: MODIFICATION CODES

STANDARD MATERIAL AND FINISH (*)		
Sym	**Description**	**RoHS**
	Omit for Aluminum/ Cadmium Olive Drab	
F7	Aluminum/ Black Zinc Nickel	✓
F11	Aluminum/ Electroless Nickel	✓
MB	Marine Bronze/ Unplated	✓
FK	Stainless Steel/ Passivate	✓

TABLE V

ELASTOMER OPTIONS	
Sym	**Description**
	Omit for Polychloroprene Elastomer
FR	Fire Resistant Elastomer
S	Silicone Elastomer

(*) For further options, please contact the factory.
(**) Crimp Contacts Only

© 2015 Glenair, Inc. U.S. CAGE Code 06324 Printed in Italy

Downloaded from Arrow.com.

ITS 31038 A and ITS 31038 R
ITS 41038 A and ITS 41038 R
Rear Panel Mount Square Flange Receptacle Assembly
with 90° Backshell for the Attachment of Additional Accessories

XX	ITS	31	038	A	FP	20-27	P	Y	XXX
Elastomer Option (See Table III)	Reverse Bayonet Coupling *ITS* - Alumium Shell with Stainless Steel Studs *ITB* - Marine Bronze or Stainless Steel Shell without Stainless Steel Studs For further details, see diagram on page A-38	Contact Type *31* - Solder *41* - Crimp	*038* - Rear Wall Mount with 90° Backshell	Connector/Backshell Class *A* - Non-Environmental; Supplied with 90° Backshell Only *R* - Environmental; Supplied with 90° Backshell and Grommet	Mounting Holes *FP* - Through Mounting Holes *OMIT* - For Threaded Mounting Holes	Shell Size and Insert Arrangement (See Section A)	Contact Gender *P* - Pin *S* - Socket	Alternate Insert Rotation (W, X, Y, Z) Omit for Normal (See Section A)	Mod Code Option (See Table II)

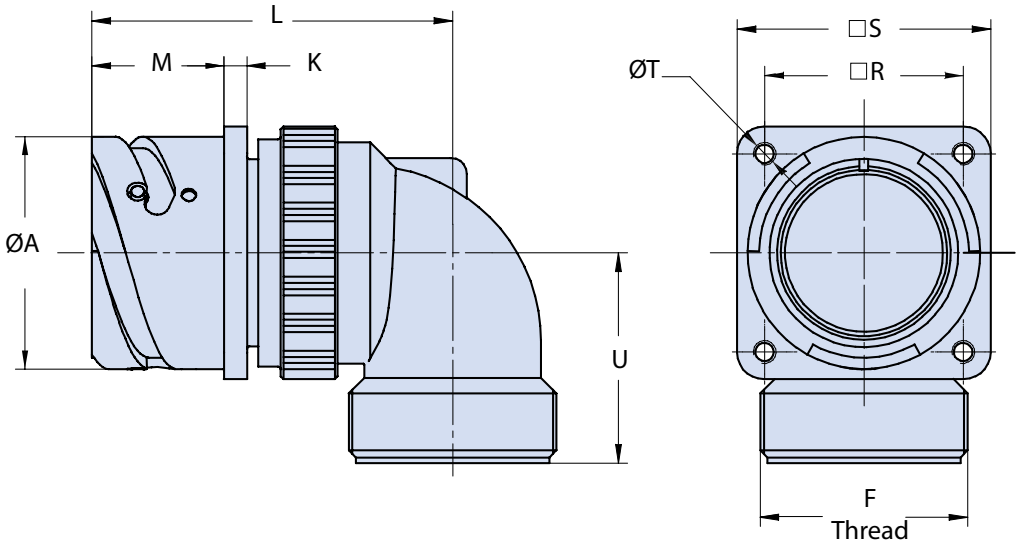

Application Notes

1. Rear panel mount square flange receptacle with 90° backshell. Threaded mounting holes. Optional non-threaded mounting holes available.
2. Connector/Backshell Class "A" (non-environmental)—Not supplied with wire sealing grommet; Class "R" (environmental)—Supplied with 90° grommet.
3. Standard materials configuration consists of aluminum alloy. For platings, see TABLE II finish options.
4. Standard contact material consists of copper alloy with silver plating or gold plating.
5. A broad range of additional connector accessories are available. See our website and/or contact the factory for complete information.
6. Order cable clamps separately.

© 2015 Glenair, Inc. U.S. CAGE Code 06324 Printed in Italy

Downloaded from Arrow.com.

ITS 31038 A and ITS 31038 R
ITS 41038 A and ITS 41038 R
Rear Panel Mount Square Flange Receptacle Assembly
with 90° Backshell for the Attachment of Additional Accessories

TABLE I: DIMENSIONS

Shell Size	ØA +0.2 -0.1	F Thread	K ±0.2	L Max.	U ±0.2	M +0.2 -0	R ±0.2	S ±0.2	T Thread
10 SL	18.2	0.6250 - 24UNEF	2.8	48	25.0	18.4	18.25	25.4	M4
14 S	24.5	0.7500 - 20UNEF	3.2	50	26.5	18.4	23.00	30.4	M4
16 S	27.2	0.8750 - 20UNEF	3.2	53	27.0	18.4	24.60	32.5	M4
16	27.2	0.8750 - 20UNEF	3.2	60	27.0	23.2	24.60	32.5	M4
18	30.7	1.0000 - 20UNEF	4.0	61	30.0	23.2	27.00	35.0	M4
20	34.0	1.1875 - 18UNEF	4.0	69	32.0	23.2	29.40	38.0	M4
22	37.3	1.1875 - 18UNEF	4.0	69	32.0	23.2	31.75	41.0	M4
24	40.9	1.4375 - 18UNEF	4.0	71	37.0	23.2	34.90	44.5	M4
28	46.7	1.4375 - 18UNEF	4.0	73	38.0	24.2	39.70	50.9	M5
32	53.4	1.7500 - 18UNS	4.0	77	45.5	24.2	44.50	57.0	M5
36	59.6	2.0000 - 18UNS	4.0	80	47.2	24.2	49.20	63.5	M5
40	65.5	2.2500 - 16UN	4.0	83	52.0	24.2	55.55	69.9	M5

For through mounting holes refer to page B-3.

TABLE II: MODIFICATION CODES

CONTACT OPTIONS		
Sym	**Description**	
B0	Connector without Contacts**	
B1	Connector with Gold Plated Contacts	
Omit for standard version (Silver plated)		
STANDARD MATERIAL AND FINISH (*)		
Sym	**Description**	**RoHS**
	Omit for Aluminum/ Cadmium Olive Drab	
F6	Aluminum/ Black Electrodeposited Paint	✓
F7	Aluminum/ Black Zinc Nickel	✓
F11	Aluminum/ Electroless Nickel	✓
MB	Marine Bronze/ Unplated	✓
FK	Stainless Steel/ Passivate	✓

(*) For further options, please contact the factory.

(**) Crimp Contacts Only

TABLE III

ELASTOMER OPTIONS	
Sym	**Description**
	Omit for Polychloroprene Elastomer
FR	Fire Resistant Elastomer
S	Silicone Elastomer

© 2015 Glenair, Inc.

Downloaded from Arrow.com.

ITS 3107 A and ITS 3107 R
ITS 4107 A and ITS 4107 R
Rear Panel Mount Jam Nut Receptacle
No Accessory Threads

XX	ITS	31	07	A	20-27	P	Y	XXX

- **XX** — Elastomer Option (See Table III)
- **ITS** — Reverse Bayonet Coupling
  ITS - Alumium Shell with Stainless Steel Studs
  ITB - Marine Bronze or Stainless Steel Shell without Stainless Steel Studs
  For further details, see diagram on page A-38
- **31** — Contact Type
  31 - Solder
  41 - Crimp
- **07** — *07* - Rear Box Mount Jam Nut Receptacle
- **A** — Connector Class
  A - General Duty
  R - Sealed Insulator
- **20-27** — Shell Size and Insert Arrangement (See Section A)
- **P** — Contact Gender
  P - Pin
  S - Socket
- **Y** — Alternate Insert Rotation (W, X, Y, Z) Omit for Normal (See Section A)
- **XXX** — Mod Code Option (See Table II)

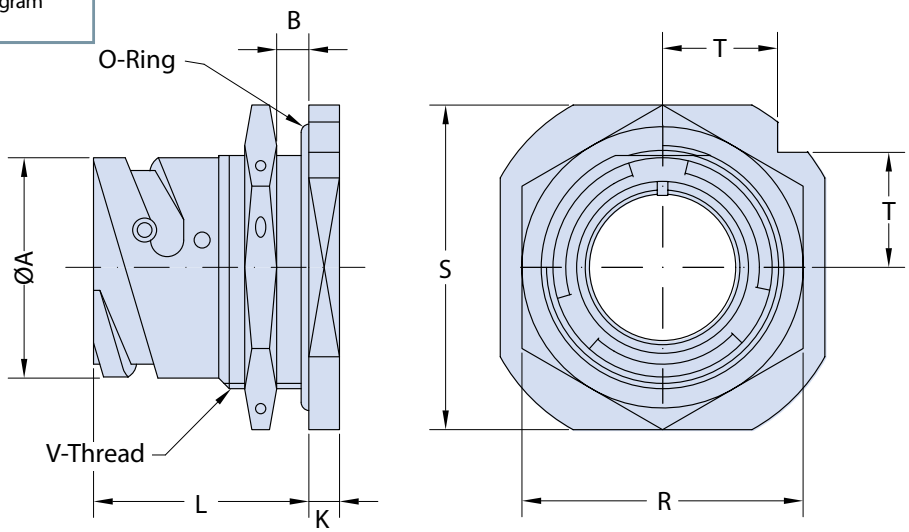

Application Notes

1. Rear panel mount jam nut receptacle without accessory threads.
2. Connector Class "A" - General Duty.
   Connector Class "R" - Environmental. Sealed insulator only with solder contacts.
3. Standard materials configuration consists of aluminum alloy. For platings, see TABLE II finish options.
4. Standard contact material consists of copper alloy with silver plating or gold plating.

© 2015 Glenair, Inc. U.S. CAGE Code 06324 Printed in Italy

Downloaded from Arrow.com.

ITS 3107 A and ITS 3107 R
ITS 4107 A and ITS 4107 R
Rear Panel Mount Jam Nut Receptacle
No Accessory Threads

TABLE I: DIMENSIONS

Shell Size	ØA +0.2 -0.1	B		K ±0.2	L ±0.1	R Key	S ±0.2	T	V Thread
		Min.	Max.						
10 SL	18.2	2.4	5.2	4.0	24.5	27	31.8	11.2	0.8750 - 20UNEF
14 S	24.5	2.4	7.5	4.8	26.8	33	41.3	14.6	1.1250 - 18UNEF
16 S	27.2	2.4	7.5	4.8	26.8	38	44.4	15.7	1.2500 - 18UNEF
16	27.2	2.4	7.5	4.8	32.2	38	44.4	15.7	1.2500 - 18UNEF
18	30.7	2.4	9.0	4.8	33.7	40	47.6	16.8	1.3750 - 18UNEF
20	34.0	2.4	9.0	4.8	33.7	44	50.8	18.0	1.5000 - 18UNEF
22	37.3	2.4	9.1	4.8	33.7	46	54.2	20.2	1.6250 - 18UNEF
24	40.9	2.4	9.1	4.8	33.7	51	57.2	20.2	1.7500 - 18UNS
28	46.7	2.4	8.5	5.6	35.2	55	63.5	22.5	2.0000 - 18UNS
32	53.4	2.4	6.5	5.6	35.2	62	69.8	24.7	2.2500 - 16UN
36	59.6	2.4	8.3	5.6	35.2	71	76.2	26.9	2.5000 - 16UN
40	65.5	2.4	8.3	5.6	35.2	75	83.5	29.6	2.7500 - 16UN

TABLE II: MODIFICATION CODES

CONTACT OPTIONS		
Sym	**Description**	
B0	Connector without Contacts**	
B1	Connector with Gold Plated Contacts	
Omit for standard version (Silver plated)		
STANDARD MATERIAL AND FINISH (*)		
Sym	**Description**	**RoHS**
	Omit for Aluminum/ Cadmium Olive Drab	
F6	Aluminum/ Black Electrodeposited Paint	✓
F7	Aluminum/ Black Zinc Nickel	✓
F11	Aluminum/ Electroless Nickel	✓
MB	Marine Bronze/ Unplated	✓
FK	Stainless Steel/ Passivate	✓

(*) For further options, please contact the factory.

(**) Crimp Contacts Only

TABLE III

ELASTOMER OPTIONS	
Sym	**Description**
	Omit for Polychloroprene Elastomer
FR	Fire Resistant Elastomer
S	Silicone Elastomer

© 2015 Glenair, Inc. U.S. CAGE Code 06324 Printed in Italy

Downloaded from Arrow.com.

ITS 31070 A N0 and ITS 31070 R N0
ITS 41070 A N0 and ITS 41070 R N0
Rear Panel Mount Jam Nut Receptacle
with Accessory Mounting Threads

Elastomer Option (See Table III)	Contact Type *31* - Solder *41* - Crimp	*070* - Rear Wall Mount Jam Nut Receptacle with Accessory Threads	Contact Gender *P* - Pin *S* - Socket	Contact Options (See Table IV)	Mod Code Option (See Table II)

XX	ITS	31	070	A	20-27	P	Y	XX	N0	XXX

Reverse Bayonet Coupling *ITS* - Alumium Shell with Stainless Steel Studs *ITB* - Marine Bronze or Stainless Steel Shell without Stainless Steel Studs For further details, see diagram on page A-38	Connector Class *A* - General Duty *R* - Sealed Insulator	Shell Size and Insert Arrangement (See Section A)	Alternate Insert Rotation (W, X, Y, Z) Omit for Normal (See Section A)	*NO* - No Backshell *NOG* - Supplied with Grommet and Compression Ring, No Backshell

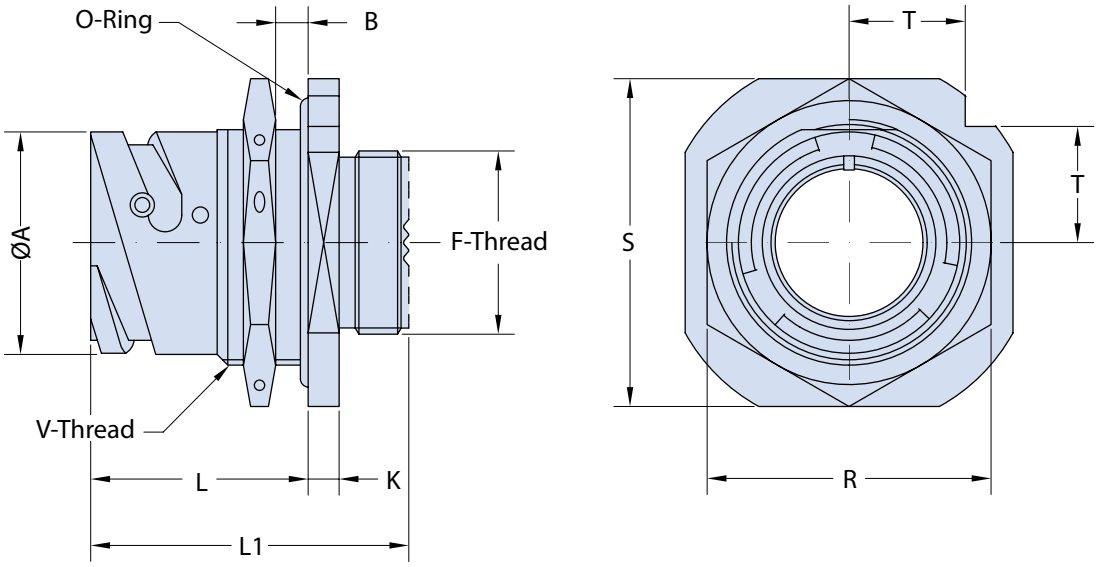

Application Notes

1. Rear Panel Mount Jam Nut Receptacle with backshell for the attachmentof strain-relieving cable clamps or other accessories. No backshell and grommet provided.
2. Connector Class "A" - General Duty.
   Connector Class "R" - Environmental. Sealed insulator only with solder contacts.
3. Standard materials configuration consists of aluminum alloy. For platings, see TABLE II finish options.
4. Standard contact material consists of copper alloy with silver plating or gold plating.
5. A broad range of other front and rear connector accessories are available.
   See our website and/or contact the factory for complete information.

© 2015 Glenair, Inc. U.S. CAGE Code 06324 Printed in Italy

Downloaded from Arrow.com.

ITS 31070 A N0 and ITS 31070 R N0
ITS 41070 A N0 and ITS 41070 R N0
Rear Panel Mount Jam Nut Receptacle
with Accessory Mounting Threads

TABLE I: DIMENSIONS

Shell Size	ØA +0.2 -0.1	B		F Thread	K ±0.2	L ±0.1	L1 ±0.25	R (Key)	S ±0.2	T	V Thread
		Min.	Max.								
10 SL	18.2	2.4	5.2	0.6250 - 24UNEF	4.0	24.5	36.2	27	31.8	11.2	0.8750 - 20UNEF
14 S	24.5	2.4	7.5	0.7500 - 20UNEF	4.8	26.8	38.9	33	41.3	14.6	1.1250 - 18UNEF
16 S	27.2	2.4	7.5	0.8750 - 20UNEF	4.8	26.8	38.9	38	44.4	15.7	1.2500 - 18UNEF
16	27.2	2.4	7.5	0.8750 - 20UNEF	4.8	32.2	48.5	38	44.4	15.7	1.2500 - 18UNEF
18	30.7	2.4	9.0	1.0000 - 20UNEF	4.8	33.7	49.3	40	47.6	16.8	1.3750 - 18UNEF
20	34.0	2.4	9.0	1.1250 - 18UNEF	4.8	33.7	49.3	44	50.8	18.0	1.5000 - 18UNEF
22	37.3	2.4	9.1	1.2500 - 18UNEF	4.8	33.7	49.3	46	54.2	20.2	1.6250 - 18UNEF
24	40.9	2.4	9.1	1.3750 - 18UNEF	4.8	33.7	49.3	51	57.2	20.2	1.7500 - 18UNS
28	46.7	2.4	8.5	1.6250 - 18UNEF	5.6	35.2	51.9	55	63.5	22.5	2.0000 - 18UNS
32	53.4	2.4	6.5	1.8750 - 16UN	5.6	35.2	51.9	62	69.8	24.7	2.2500 - 16UN
36	59.6	2.4	8.3	2.0625 - 16UNS	5.6	35.2	51.9	71	76.2	26.9	2.5000 - 16UN
40	65.5	2.4	8.3	2.3125 - 16UNS	5.6	35.2	51.9	75	83.5	29.6	2.7500 - 16UN

TABLE II: MODIFICATION CODES

STANDARD MATERIAL AND FINISH (*)		
Sym	**Description**	**RoHS**
	Omit for Aluminum/ Cadmium Olive Drab	
F6	Aluminum/ Black Electrodeposited Paint	✓
F7	Aluminum/ Black Zinc Nickel	✓
F11	Aluminum/ Electroless Nickel	✓
MB	Marine Bronze/ Unplated	✓
FK	Stainless Steel/ Passivate	✓

TABLE III

ELASTOMER OPTIONS	
Sym	**Description**
	Omit for Polychloroprene Elastomer
FR	Fire Resistant Elastomer
S	Silicone Elastomer

TABLE IV: MODIFICATION CODES

CONTACT OPTIONS	
Sym	**Description**
B0	Connector without Contacts**
B1	Connector with Gold Plated Contacts
Omit for standard version (Silver plated)	

(*) For further options, please contact the factory.

(**) Crimp Contacts Only

© 2015 Glenair, Inc. U.S. CAGE Code 06324 Printed in Italy

Downloaded from Arrow.com.

ITS 31070 A and ITS 31070 AR
ITS 41070 A and ITS 41070 AR
Rear Panel Mount Jam Nut Receptacle
with Connector Accessory Mounting Threads

Reverse Bayonet Coupling
ITS - Alumium Shell with Stainless Steel Studs
ITB - Marine Bronze or Stainless Steel Shell without Stainless Steel Studs
For further details, see diagram on page A-38

Connector/Backshell Class
A - Non-Environmental; Supplied with Backshell Only
AR - Environmental; Supplied with Backshell and Grommet

Contact Gender
P - Pin
S - Socket

Mod Code Option (See Table II)

XX	ITS	31	070	A	20-27	P	Y	XXX

Elastomer Option (See Table III)

Contact Type
31 - Solder
41 - Crimp

070 - Rear Wall Mount Jam Nut Receptacle with Accessory Threads

Shell Size and Insert Arrangement (See Section A)

Alternate Insert Rotation (W, X, Y, Z) Omit for Normal (See Section A)

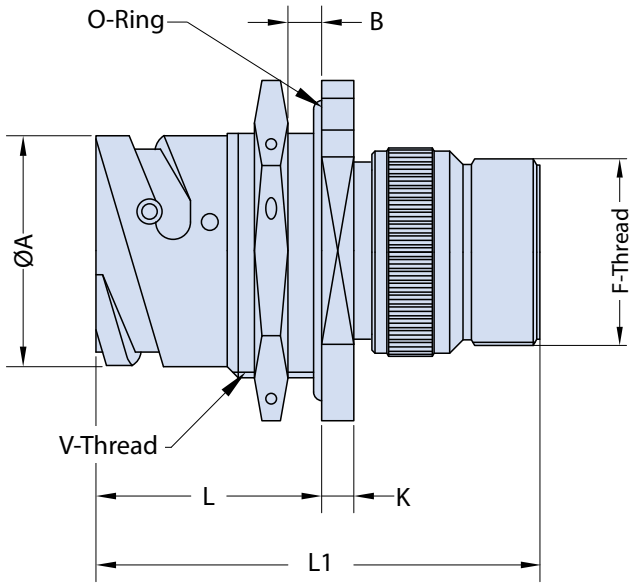

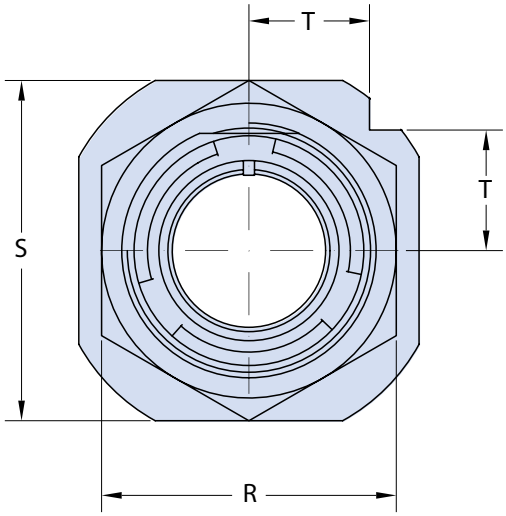

Application Notes

1. Rear panel mount jam nut receptacle with rear threads for attachment of various backend connector accessories. No backshell provided.
2. Connector Class "A" (non-environmental)—Not supplied with wire sealing grommet; Class "AR" - Supplied with wire sealing grommet.
3. Standard materials configuration consists of aluminum alloy. For platings, see TABLE II finish options.
4. Standard contact material consists of copper alloy with silver plating or gold plating.
5. A broad range of other front and rear connector accessories are available. See our website and/or contact the factory for complete information.

© 2015 Glenair, Inc. U.S. CAGE Code 06324 Printed in Italy

Downloaded from Arrow.com.

ITS 31070 A and ITS 31070 AR
ITS 41070 A and ITS 41070 AR
Rear Panel Mount Jam Nut Receptacle
with Connector Accessory Mounting Threads

TABLE I: DIMENSIONS

Shell Size	ØA +0.2 -0.1	B		F Thread	K ±0.2	L ±0.1	L1 Max.	R Key	S ±0.2	T	V Thread
		min.	Max.								
10 SL	18.2	2.4	5.2	0.6250 - 24UNEF	4.0	24.5	55.5	27	31.8	11.2	0.8750 - 20UNEF
14 S	24.5	2.4	7.5	0.7500 - 20UNEF	4.8	26.8	60.5	33	41.3	14.6	1.1250 - 18UNEF
16 S	27.2	2.4	7.5	0.8750 - 20UNEF	4.8	26.8	60.5	38	44.4	15.7	1.2500 - 18UNEF
16	27.2	2.4	7.5	0.8750 - 20UNEF	4.8	32.2	72.0	38	44.4	15.7	1.2500 - 18UNEF
18	30.7	2.4	9.0	1.0000 - 20UNEF	4.8	33.7	73.0	40	47.6	16.8	1.3750 - 18UNEF
20	34.0	2.4	9.0	1.1875 - 18UNEF	4.8	33.7	73.5	44	50.8	18.0	1.5000 - 18UNEF
22	37.3	2.4	9.1	1.1875 - 18UNEF	4.8	33.7	73.5	46	54.2	20.2	1.6250 - 18UNEF
24	40.9	2.4	9.1	1.4375 - 18UNEF	4.8	33.7	74.0	51	57.2	20.2	1.7500 - 18UNS
28	46.7	2.4	8.5	1.4375 - 18UNEF	5.6	35.2	82.5	55	63.5	22.5	2.0000 - 18UNS
32	53.4	2.4	6.5	1.7500 - 18UNS	5.6	35.2	86.0	62	69.8	24.7	2.2500 - 16UN
36	59.6	2.4	8.3	2.0000 - 18UNS	5.6	35.2	91.5	71	76.2	26.9	2.5000 - 16UN
40	65.5	2.4	8.3	2.2500 - 16UN	5.6	35.2	91.5	75	83.5	29.6	2.7500 - 16UN

TABLE II: MODIFICATION CODES

CONTACT OPTIONS		
Sym	**Description**	
B0	Connector without Contacts**	
B1	Connector with Gold Plated Contacts	
Omit for standard version (Silver plated)		
STANDARD MATERIAL AND FINISH (*)		
Sym	**Description**	**RoHS**
	Omit for Aluminum/ Cadmium Olive Drab	
F6	Aluminum/ Black Electrodeposited Paint	✓
F7	Aluminum/ Black Zinc Nickel	✓
F11	Aluminum/ Electroless Nickel	✓
MB	Marine Bronze/ Unplated	✓
FK	Stainless Steel/ Passivate	✓

(*) For further options, please contact the factory.

(**) Crimp Contacts Only

TABLE III

ELASTOMER OPTIONS	
Sym	**Description**
	Omit for Polychloroprene Elastomer
FR	Fire Resistant Elastomer
S	Silicone Elastomer

© 2015 Glenair, Inc. U.S. CAGE Code 06324 Printed in Italy

Downloaded from Arrow.com.

ITS 31070 GR and ITS 41070 GR
Rear Panel Mount Jam Nut Receptacle
with Rotating Coupling Nut Backshell for Heat-Shrink Tubing

Reverse Bayonet Coupling
ITS - Alumium Shell with Stainless Steel Studs
ITB - Marine Bronze or Stainless Steel Shell without Stainless Steel Studs
For further details, see diagram on page A-38

Connector/Backshell Class
GR - Environmental; Supplied with Backshell for Heat Shrink Tubing and Rotating Clamp Nut

Contact Gender
P - Pin
S - Socket

Mod Code Option (See Table II)

XX	ITS	31	070	GR	20-27	P	Y	XXX

Elastomer Option (See Table III)

Contact Type
31 - Solder
41 - Crimp

070 - Rear Wall Mount Jam Nut Receptacle with Accessory Threads

Shell Size and Insert Arrangement (See Section A)

Alternate Insert Rotation (W, X, Y, Z) Omit for Normal (See Section A)

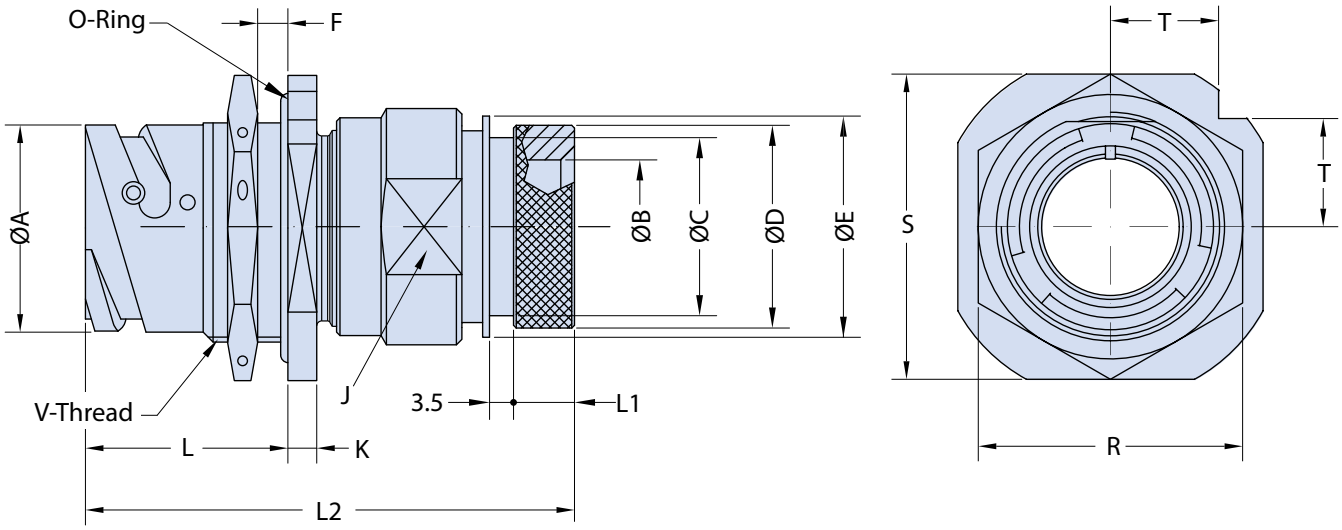

Application Notes

1. Rear panel mount jam nut receptacle with backshell for heat-shrink tubing
2. Environmental class "GR" (environmental)—Wire sealing grommet supplied.
3. Standard materials configuration consists of aluminum alloy. For platings, see TABLE II finish options.
4. Standard contact material consists of copper alloy with silver plating or gold plating.

© 2015 Glenair, Inc. U.S. CAGE Code 06324 Printed in Italy

Downloaded from Arrow.com.

ITS 31070 GR and ITS 41070 GR
Rear Panel Mount Jam Nut Receptacle
with Rotating Coupling Nut Backshell for Heat-Shrink Tubing

Glenair®

TABLE I: DIMENSIONS

Shell Size	ØA +0.2 -0.1	ØB Min.	ØC ±0.1	ØD ±0.2	ØE ±0.1	F min.	F Max.	J key	K ±0.2	L ±0.1	L1 ±0.1	L2 Max.	R Key	S ±0.2	T	V Thread
10 SL	18.2	8.6	13.0	15.5	17.0	2.4	5.2	20	4.0	24.5	8.2	65	27	31.8	11.2	0.8750 - 20UNEF
14 S	24.5	10.7	16.5	19.1	20.1	2.4	7.5	23	4.8	26.8	8.2	65	33	41.3	14.6	1.1250 - 18UNEF
16 S	27.2	14.0	24.9	23.9	23.5	2.4	7.5	26	4.8	26.8	8.0	65	38	44.4	15.7	1.2500 - 18UNEF
16	27.2	14.0	24.9	23.9	23.5	2.4	7.5	26	4.8	32.2	8.0	75	38	44.4	15.7	1.2500 - 18UNEF
18	30.7	17.5	21.7	23.9	26.5	2.4	9.0	28	4.8	33.7	8.0	75	40	47.6	16.8	1.3750 - 18UNEF
20	34.0	18.8	26.2	29.6	30.2	2.4	9.0	32	4.8	33.7	8.9	75	44	50.8	18.0	1.5000 - 18UNEF
22	37.3	21.0	26.2	29.6	33.6	2.4	9.1	36	4.8	33.7	9.2	75	46	54.2	20.2	1.6250 - 18UNEF
24	40.9	25.4	34.0	37.8	36.1	2.4	9.1	39	4.8	33.7	9.5	80	51	57.2	20.2	1.7500 - 18UNS
28	46.7	28.4	34.3	37.8	41.4	2.4	8.5	46	5.6	35.2	9.2	80	55	63.5	22.5	2.0000 - 18UNS
32	53.4	34.0	43.6	47.8	48.6	2.4	6.5	52	5.6	35.2	11.7	85	62	69.8	24.7	2.2500 - 16UN
36	59.6	40.5	43.6	47.8	54.0	2.4	8.3	58	5.6	35.2	11.5	85	71	76.2	26.9	2.5000 - 16UN
40	65.5	49.0	52.6	57.8	61.0	2.4	8.3	65	5.6	35.2	11.5	85	75	83.5	29.6	2.7500 - 16UN

TABLE II: MODIFICATION CODES

CONTACT OPTIONS		
Sym	**Description**	
B0	Connector without Contacts**	
B1	Connector with Gold Plated Contacts	
Omit for standard version (Silver plated)		
STANDARD MATERIAL AND FINISH (*)		
Sym	**Description**	**RoHS**
	Omit for Aluminum/ Cadmium Olive Drab	
F6	Aluminum/ Black Electrodeposited Paint	✓
F7	Aluminum/ Black Zinc Nickel	✓
F11	Aluminum/ Electroless Nickel	✓
MB	Marine Bronze/ Unplated	✓
FK	Stainless Steel/ Passivate	✓

(*) For further options, please contact the factory.

(**) Crimp Contacts Only

TABLE III

ELASTOMER OPTIONS	
Sym	**Description**
	Omit for Polychloroprene Elastomer
FR	Fire Resistant Elastomer
S	Silicone Elastomer

© 2015 Glenair, Inc.

Downloaded from Arrow.com.

ITS 31078 A and ITS 31078 R
ITS 41078 A and ITS 41078 R
Rear Panel Mount Jam Nut Receptacle
with 90° Backshell for the Attachment of Additional Accessories

Elastomer Option (See Table III)	Contact Type		Shell Size and Insert Arrangement (See Section A)	Contact Gender	Mod Code Option (See Table II)
	31 - Solder *41* - Crimp	*078* - Rear Wall Mount Jam Nut Receptacle with 90° Backshell		*P* - Pin *S* - Socket	
XX	ITS	31	078	A	20-27	P	Y	XXX

Reverse Bayonet Coupling
ITS - Alumium Shell with Stainless Steel Studs
ITB - Marine Bronze or Stainless Steel Shell without Stainless Steel Studs
For further details, see diagram on page A-38

Connector/Backshell Class
A - Non-Environmental with 90° Backshell
R - Environmental with 90° Backshell and Wire Sealing Grommet

Alternate Insert Rotation (W, X, Y, Z)
Omit for Normal
(See Section A)

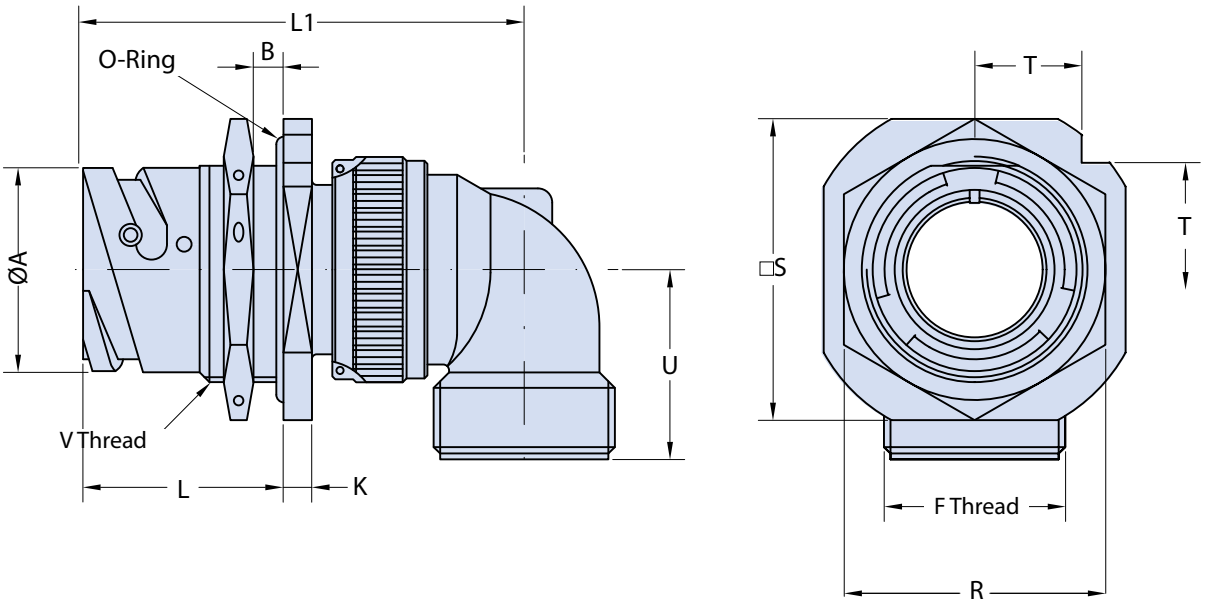

Application Notes

1. Rear panel mount jam nut receptacle with 90° backshell.
2. Connector/Backshell Class "A" (non-environmental)—Not supplied with wire sealing grommet; Class "R" (environmental)—Supplied with 90° grommet.
3. Standard materials configuration consists of aluminum alloy. For platings, see TABLE II finish options.
4. Standard contact material consists of copper alloy with silver plating or gold plating.
5. A broad range of additional connector accessories are available. Contact the factory for complete information.
6. Order cable clamps separately.

© 2015 Glenair, Inc. U.S. CAGE Code 06324 Printed in Italy

Downloaded from Arrow.com.

ITS 31078 A and ITS 31078 R
ITS 41078 A and ITS 41078 R
Rear Panel Mount Jam Nut Receptacle
with 90° Backshell for the Attachment of Additional Accessories

TABLE I: DIMENSIONS

Shell Size	ØA +0.2 -0.1	B		F Thread	K ±0.2	L ±0.1	L1 Max.	R Key	S ±0.2	T	U ±0.2	V Thread
		Min.	Max.									
10 SL	18.2	2.4	5.2	0.6250 - 24UNEF	4.0	24.5	55	27	31.8	11.2	25.0	0.8750 - 20UNEF
14 S	24.5	2.4	7.5	0.7500 - 20UNEF	4.8	26.8	60	33	41.3	14.6	26.5	1.1250 - 18UNEF
16 S	27.2	2.4	7.5	0.8750 - 20UNEF	4.8	26.8	60	38	44.4	15.7	27.0	1.2500 - 18UNEF
16	27.2	2.4	7.5	0.8750 - 20UNEF	4.8	32.2	73	38	44.4	15.7	27.0	1.2500 - 18UNEF
18	30.7	2.4	9.0	1.0000 - 20UNEF	4.8	33.7	74	40	47.6	16.8	30.0	1.3750 - 18UNEF
20	34.0	2.4	9.0	1.1875 - 18UNEF	4.8	33.7	80	44	50.8	18.0	32.0	1.5000 - 18UNEF
22	37.3	2.4	9.1	1.1875 - 18UNEF	4.8	33.7	80	46	54.2	20.2	32.0	1.6250 - 18UNEF
24	40.9	2.4	9.1	1.4375 - 18UNEF	4.8	33.7	84	51	57.2	20.2	37.0	1.7500 - 18UNS
28	46.7	2.4	8.5	1.4375 - 18UNEF	5.6	35.2	85	55	63.5	22.5	38.0	2.0000 - 18UNS
32	53.4	2.4	6.5	1.7500 - 18UNS	5.6	35.2	89	62	69.8	24.7	45.5	2.2500 - 16UN
36	59.6	2.4	8.3	2.0000 - 18UNS	5.6	35.2	93	71	76.2	26.9	47.2	2.5000 - 16UN
40	65.5	2.4	8.3	2.2500 - 16UN	5.6	35.2	95	75	83.5	29.6	52.0	2.7500 - 16UN

TABLE II: MODIFICATION CODES

CONTACT OPTIONS		
Sym	**Description**	
B0	Connector without Contacts**	
B1	Connector with Gold Plated Contacts	
Omit for standard version (Silver plated)		
STANDARD MATERIAL AND FINISH (*)		
Sym	**Description**	**RoHS**
	Omit for Aluminum/ Cadmium Olive Drab	
F6	Aluminum/ Black Electrodeposited Paint	✓
F7	Aluminum/ Black Zinc Nickel	✓
F11	Aluminum/ Electroless Nickel	✓
MB	Marine Bronze/ Unplated	✓
FK	Stainless Steel/ Passivate	✓

(*) For further options, please contact the factory.

(**) Crimp Contacts Only

TABLE III

ELASTOMER OPTIONS	
Sym	**Description**
	Omit for Polychloroprene Elastomer
FR	Fire Resistant Elastomer
S	Silicone Elastomer

© 2015 Glenair, Inc. U.S. CAGE Code 06324 Printed in Italy

Downloaded from Arrow.com.

ITS 3106 A N0 and ITS 4106 A N0
Straight Cylindrical Plug Connector
with Accessory Mounting Threads

XX	ITS	G	31	06	A	20-27	P	Y	XX	N0	XXX
Elastomer Option (See Table III)	Reverse Bayonet Coupling *ITS* - Alumium Shell with Stainless Steel Studs *ITB* - Marine Bronze or Stainless Steel Shell without Stainless Steel Studs For further details, see diagram on page A-38	Grounding Fingers (Omit for Standard)	Contact Type *31* - Solder *41* - Crimp	*06* - Straight Plug Assembly with Accessory Threads	Connector Class *A* - General Duty *R* - Sealed Insulator	Shell Size and Insert Arrangement (See Section A)	Contact Gender *P* - Pin *S* - Socket	Alternate Insert Rotation (W, X, Y, Z) Omit for Normal (See Section A)	Contact Options (See Table IV)	*NO* - No Backshell *NOG* - Supplied with Grommet and Compression Ring, No Backshell	Mod Code Option (See Table II)

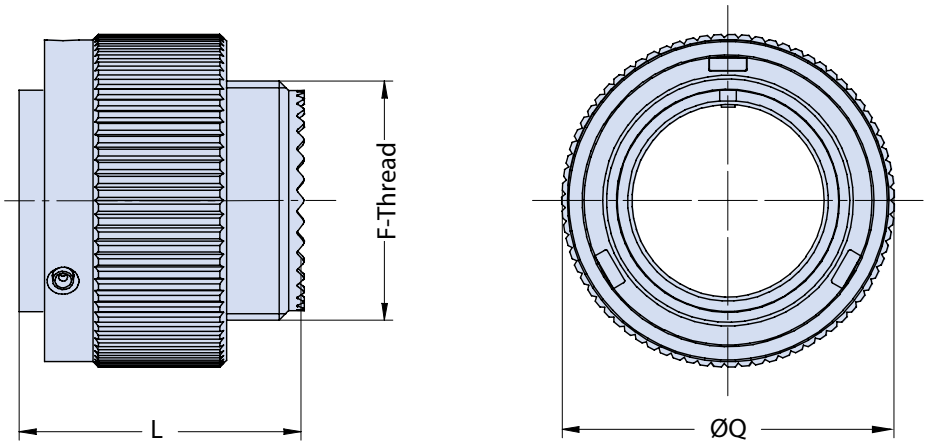

Application Notes

1. Straight plug with rear threads for attachment of various backend connector accessories. No backshell provided.
2. Connector Class "A" (General Duty). Connector Class "R" (Environmental): sealed insulator only with solder contacts.
3. Standard materials configuration consists of aluminum alloy. For platings, see TABLE II finish options.
4. Standard contact material consists of copper alloy with silver plating or gold plating.
5. A broad range of other front and rear connector accessories are available.
   See our website and/or contact the factory for complete information.

© 2015 Glenair, Inc. U.S. CAGE Code 06324 Printed in Italy

Downloaded from Arrow.com.

ITS 3106 A N0 and ITS 4106 A N0
Straight Cylindrical Plug Connector
with Accessory Mounting Threads

TABLE I: DIMENSIONS

Shell Size	L ±0.1	ØQ ±0.2	F Thread
10 SL	24.6	22.6	0.6250 - 24UNEF
14 S	24.6	29.0	0.7500 - 20UNEF
16 S	24.6	31.6	0.8750 - 20UNEF
16	34.1	31.6	0.8750 - 20UNEF
18	34.1	36.2	1.0000 - 20UNEF
20	34.9	39.8	1.1250 - 18UNEF
22	34.9	43.0	1.2500 - 18UNEF
24	35.7	46.4	1.3750 - 18UNEF
28	35.7	53.0	1.6250 - 18UNEF
32	37.3	60.0	1.8750 - 16UN
36	37.3	66.2	2.0625 - 16UNS
40	37.3	72.3	2.3125 - 16UNS

TABLE II: MODIFICATION CODES

STANDARD MATERIAL AND FINISH (*)		
Sym	**Description**	**RoHS**
	Omit for Aluminum/ Cadmium Olive Drab	
F6	Aluminum/ Black Electrodeposited Paint	✓
F7	Aluminum/ Black Zinc Nickel	✓
F11	Aluminum/ Electroless Nickel	✓
MB	Marine Bronze/ Unplated	✓
FK	Stainless Steel/ Passivate	✓

TABLE III

ELASTOMER OPTIONS	
Sym	**Description**
	Omit for Polychloroprene Elastomer
FR	Fire Resistant Elastomer
S	Silicone Elastomer

TABLE IV: MODIFICATION CODES

CONTACT OPTIONS	
Sym	**Description**
B0	Connector without Contacts**
B1	Connector with Gold Plated Contacts
Omit for standard version (Silver plated)	

(*) For further options, please contact the factory.

(**) Crimp Contacts Only

© 2015 Glenair, Inc. U.S. CAGE Code 06324 Printed in Italy

Downloaded from Arrow.com.

ITS 3106 A and ITS 3106 R
ITS 4106 A and ITS 4106 R
Straight Cylindrical Plug Assembly
with Backshell for the Attachment of Additional Accessories

XX	ITS	G	31	06	A	20-27	P	Y	XXX
Elastomer Option (See Table III)	Reverse Bayonet Coupling *ITS* - Alumium Shell with Stainless Steel Studs *ITB* - Marine Bronze or Stainless Steel Shell without Stainless Steel Studs For further details, see diagram on page A-38	Grounding Fingers (Omit for Standard)	Contact Type *31* - Solder *41* - Crimp	*06* - Straight Plug	Connector/Backshell Class *A* - Non-Environmental; Supplied with Backshell Only *R* - Environmental; Supplied with Backshell and Grommet	Shell Size and Insert Arrangement (See Section A)	Contact Gender *P* - Pin *S* - Socket	Alternate Insert Rotation (W, X, Y, Z) Omit for Normal (See Section A)	Mod Code Option (See Table II)

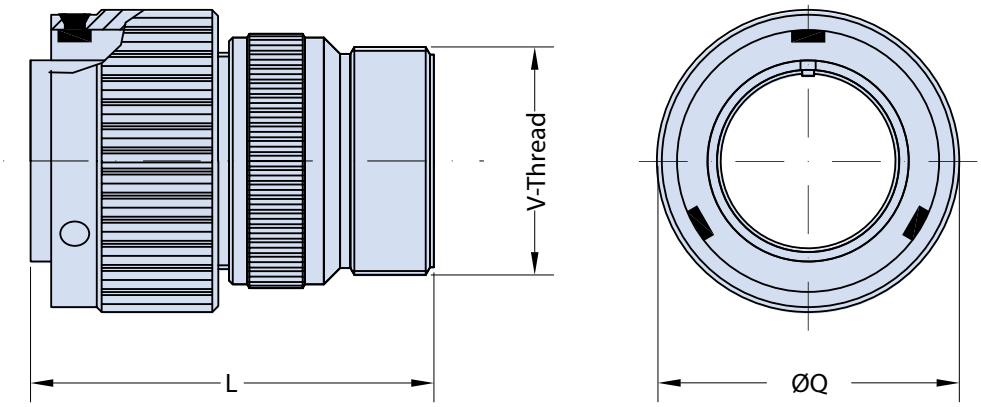

Application Notes

1. Straight plug with backshell for the attachment of strain relief cable clamps.
2. Connector/Backshell Class "A" (non-environmental)—Not supplied with wire sealing grommet; Class "R" (environmental)—Supplied with grommet.
3. Standard materials configuration consists of aluminum alloy. For platings, see TABLE II finish options.
4. Standard contact material consists of copper alloy with silver plating or gold plating.
5. A broad range of other front and rear connector accessories are available. See our website and/or contact the factory for complete information.
6. Order cable clamps separately.

© 2015 Glenair, Inc. U.S. CAGE Code 06324 Printed in Italy

Downloaded from Arrow.com.

ITS 3106 A and ITS 3106 R
ITS 4106 A and ITS 4106 R
Straight Cylindrical Plug Assembly
with Backshell for the Attachment of Additional Accessories

TABLE I: DIMENSIONS

Shell Size	L Max.	ØQ ±0.2	V Thread
10 SL	44.0	22.6	0.6250 - 24UNEF
14 S	46.5	29.0	0.7500 - 20UNEF
16 S	46.5	31.6	0.8750 - 20UNEF
16	57.5	31.6	0.8750 - 20UNEF
18	58.0	36.2	1.0000 - 20UNEF
20	58.5	39.8	1.1875 - 18UNEF
22	58.5	43.0	1.1875 - 18UNEF
24	60.5	46.4	1.4375 - 18UNEF
28	66.0	53.0	1.4375 - 18UNEF
32	71.5	60.0	1.7500 - 18UNS
36	77.0	66.2	2.0000 - 18UNS
40	77.0	72.3	2.2500 - 16UN

TABLE II: MODIFICATION CODES

CONTACT OPTIONS		
Sym	**Description**	
B0	Connector without Contacts**	
B1	Connector with Gold Plated Contacts	
Omit for standard version (Silver plated)		
STANDARD MATERIAL AND FINISH (*)		
Sym	**Description**	**RoHS**
	Omit for Aluminum/ Cadmium Olive Drab	
F6	Aluminum/ Black Electrodeposited Paint	✓
F7	Aluminum/ Black Zinc Nickel	✓
F11	Aluminum/ Electroless Nickel	✓
MB	Marine Bronze/ Unplated	✓
FK	Stainless Steel/ Passivate	✓

(*) For further options, please contact the factory.

(**) Crimp Contacts Only

TABLE III

ELASTOMER OPTIONS	
Sym	**Description**
	Omit for Polychloroprene Elastomer
FR	Fire Resistant Elastomer
S	Silicone Elastomer

© 2015 Glenair, Inc.

Downloaded from Arrow.com.

ITS 3106 A BR and ITS 3106 R BR
ITS 4106 A BR and ITS 4106 R BR
Straight Cylindrical Plug Assembly
with Backshell for Termination of UNI4883 Rubber Conduit

Elastomer Option (See Table V)	Grounding Fingers (Omit for Standard)		Shell Size and Insert Arrangement (See Section A)	Contact Gender *P* - Pin *S* - Socket	Contact Options (See Table IV)	Mod Code Option (See Table III)
XX	ITS	G	31	06	A	20-27	P	Y	XX	BR2722	XXX

Reverse Bayonet Coupling	Contact Type	Connector/Backshell Class	Alternate Insert Rotation	UNI4883 Backshell Adapter Shell Size Designator
ITS - Alumium Shell with Stainless Steel Studs *ITB* - Marine Bronze or Stainless Steel Shell without Stainless Steel Studs For further details, see diagram on page A-38	*31* - Solder *41* - Crimp	*A* - Non-Environmental; Supplied with Backshell Only *R* - Environmental; Supplied with Backshell and Grommet	(W, X, Y, Z) Omit for Normal (See Section A)	(See Table II)

06 - Straight Plug

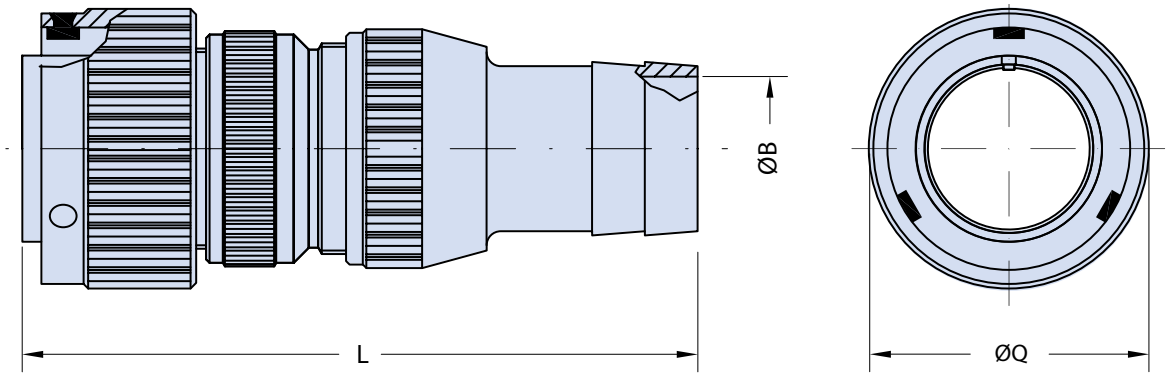

Application Notes

1. Straight plug with rear-end backshell for termination of UNI4883 type rubber conduit. Through mounting holes.
2 Connector/Backshell Class "A" (non-environmental)—Not supplied with wire sealing grommet; Class "R" (environmental)—Supplied with grommet.
3. Standard materials configuration consists of aluminum alloy. For platings, see TABLE III finish options.
4. Standard contact material consists of copper alloy with silver plating. Gold plating available.

© 2015 Glenair, Inc. U.S. CAGE Code 06324 Printed in Italy

Downloaded from Arrow.com.

ITS 3106 A BR and ITS 3106 R BR
ITS 4106 A BR and ITS 4106 R BR
Straight Cylindrical Plug Assembly
with Backshell for Termination of UNI4883 Rubber Conduit

TABLE I: DIMENSIONS

Shell Size	ØB ±0.1	L Max.	ØQ ±0.2
10 SL	See Table III Below	90.0	22.6
14 S		91.5	29.0
16 S		91.5	31.6
16		103.0	31.6
18		103.0	36.2
20		103.0	39.8
22		103.0	43.0
24		104.5	46.4
28		111.0	53.0
32		116.5	60.0
36		122.0	66.2
40		122.0	72.3

TABLE II: BACKSHELL DIMENSIONS

Shell Size	Rubber tube in accordance with UNI 4883 to be used by size		ØB ±0.1
	Ø Min.	Ø Max.	
10 SL	12.0	17.0	10.5
14 S	22.0	27.0	16.5
16-16S	12.0	17.0	10.5
16-16S	15.0	20.0	14.0
18	22.0	27.0	20.5
20 - 22	12.0	17.0	10.5
20 - 22	20.0	25.0	18.5
20 - 22	22.0	27.0	20.5
20 - 22	28.0	33.0	25.0
20 - 22	30.0	35.0	28.5
20 - 22	33.0	38.0	31.5
24 - 28	20.0	25.0	18.5
24 - 28	22.0	27.0	20.5
24 - 28	25.0	30.0	23.5
24 - 28	28.0	33.0	26.5
24 - 28	30.0	35.0	28.5
24 - 28	33.0	38.0	31.5
24 - 28	45.0	50.0	43.5
32	25.0	30.0	23.5
32	28.0	33.0	26.5
32	30.0	35.0	28.5
32	35.0	40.0	31.5
32	40.0	45.0	38.5
32	45.0	50.0	40.0
36	30.0	35.0	28.5
36	35.0	40.0	31.5
36	45.0	50.0	43.5
40	30.0	35.0	28.5
40	35.0	40.0	31.5
40	40.0	45.0	38.5
40	45.0	50.0	43.5
40	50.0	55.0	48.5

TABLE II: MODIFICATION CODES

STANDARD MATERIAL AND FINISH (*)		
Sym	**Description**	**RoHS**
	Omit for Aluminum/ Cadmium Olive Drab	
F6	Aluminum/ Black Electrodeposited Paint	✓
F7	Aluminum/ Black Zinc Nickel	✓
F11	Aluminum/ Electroless Nickel	✓
MB	Marine Bronze/ Unplated	✓
FK	Stainless Steel/ Passivate	✓

TABLE IV: MODIFICATION CODES

CONTACT OPTIONS	
Sym	**Description**
B0	Connector without Contacts**
B1	Connector with Gold Plated Contacts
Omit for standard version (Silver plated)	

TABLE V

ELASTOMER OPTIONS	
Sym	**Description**
	Omit for Polychloroprene Elastomer
FR	Fire Resistant Elastomer
S	Silicone Elastomer

(*) For further options, please contact the factory.

(**) Crimp Contacts Only

© 2015 Glenair, Inc.

U.S. CAGE Code 06324

Printed in Italy

Downloaded from Arrow.com.

ITS 3106 A PG and ITS 3106 R PG
ITS 4106 A PG and ITS 4106 R PG
Straight Cylindrical Plug Assembly
with Backshell for Attachment of PG Cable Glands

Elastomer Option (See Table III)	Grounding Fingers (Omit for Standard)		Shell Size and Insert Arrangement (See Section A)	Contact Gender *P* - Pin *S* - Socket	Contact Options (See Table IV)	Mod Code Option (See Table II)
		06 - Straight Plug				

XX	ITS	G	31	06	A	20-27	P	Y	XX	PG16	XXX

Reverse Bayonet Coupling	Contact Type	Connector/Backshell Class	Alternate Insert Rotation	PG Thread
ITS - Alumium Shell with Stainless Steel Studs *ITB* - Marine Bronze or Stainless Steel Shell without Stainless Steel Studs For further details, see diagram on page A-38	*31* - Solder *41* - Crimp	*A* - Non-Environmental; Supplied with Backshell Only *R* - Environmental; Supplied with Backshell and Grommet	(W, X, Y, Z) Omit for Normal (See Section A)	(See Table I)

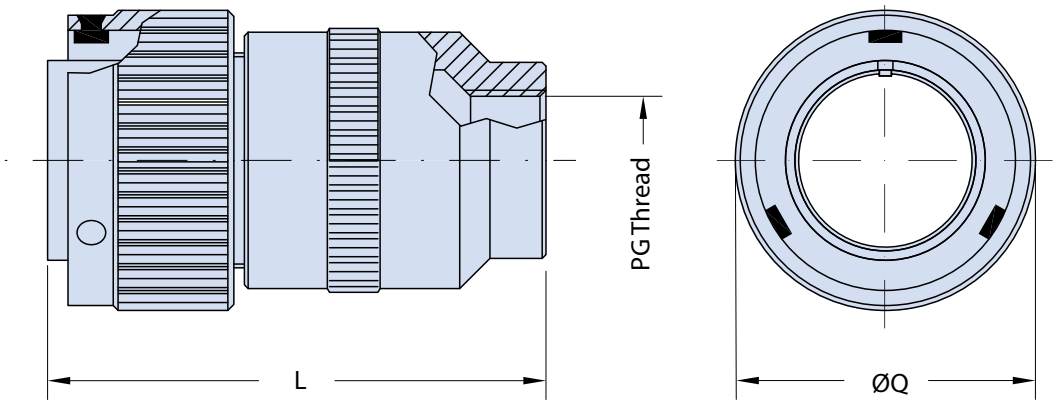

Application Notes

1. Straight cylindrical plug assembly with backshell for use with cable glands (not included). Metric cable glands not included. Other types of PG backshells can be supplied in various sizes and angles upon request.
2. Connector/Backshell Class "A" (non-environmental)—Not supplied with wire sealing grommet; Class "R" (environmental)—Supplied with grommet.
3. Standard materials configuration consists of aluminum alloy. For platings, see TABLE II finish options.
4. Standard contact material consists of copper alloy with silver plating or gold plating.

© 2015 Glenair, Inc. U.S. CAGE Code 06324 Printed in Italy

Downloaded from Arrow.com.

ITS 3106 A PG and ITS 3106 R PG
ITS 4106 A PG and ITS 4106 R PG
Straight Cylindrical Plug Assembly
with Backshell for Attachment of PG Cable Glands

TABLE I: DIMENSIONS

Shell Size	L Max.	PG Thread Other PG Threads available on request	ØQ ±0.2
10 SL	52.0	7 / 9 / 11	22.6
14 S	54.5	9/ 11 / 13.5	29.0
16 S	54.5	11 / 13.5 / 16	31.6
16	70.5	11 / 13.5 / 16	31.6
18	70.5	13.5 / 16 / 21	36.2
20	71.5	13.5 / 16 / 21	39.8
22	71.5	13.5 / 16 / 21	43.0
24	76.5	16 / 21/ 29	46.4
28	76.5	16 / 21/ 29	53.0
32	84.0	16 / 21/ 29	60.0
36	89.0	21 / 29 / 36	66.2
40	94.0	21 / 29 / 36	72.3

TABLE II: MODIFICATION CODES

STANDARD MATERIAL AND FINISH (*)		
Sym	**Description**	**RoHS**
	Omit for Aluminum/ Cadmium Olive Drab	
F6	Aluminum/ Black Electrodeposited Paint	✓
F7	Aluminum/ Black Zinc Nickel	✓
F11	Aluminum/ Electroless Nickel	✓
MB	Marine Bronze/ Unplated	✓
FK	Stainless Steel/ Passivate	✓

TABLE III

ELASTOMER OPTIONS	
Sym	**Description**
	Omit for Polychloroprene Elastomer
FR	Fire Resistant Elastomer
S	Silicone Elastomer

TABLE IV: MODIFICATION CODES

CONTACT OPTIONS	
Sym	**Description**
B0	Connector without Contacts**
B1	Connector with Gold Plated Contacts
Omit for standard version (Silver plated)	

(*) For further options, please contact the factory.

(**) Crimp Contacts Only

© 2015 Glenair, Inc. U.S. CAGE Code 06324 Printed in Italy

Downloaded from Arrow.com.

ITS 3106 A FM and ITS 3106 R FM
ITS 4106 A FM and ITS 4106 R FM
Straight Cylindrical Plug Assembly
with Backshell for Use with Metric Cable Glands

Elastomer Option (See Table III)	Grounding Fingers (Omit for Standard)		Shell Size and Insert Arrangement (See Section A)	Contact Gender *P* - Pin *S* - Socket	Contact Options (See Table IV)	Metric Thread Size (See Table I)
		06 - Straight Plug				

XX	ITS	G	31	06	A	20-27	P	Y	XX	FM25	XXX

Reverse Bayonet Coupling *ITS* - Alumium Shell with Stainless Steel Studs *ITB* - Marine Bronze or Stainless Steel Shell without Stainless Steel Studs For further details, see diagram on page A-38	Contact Type *31* - Solder *41* - Crimp	Connector/Backshell Class *A* - Non-Environmental; Supplied with Backshell Only *R* - Environmental; Supplied with Backshell and Grommet	Alternate Insert Rotation (W, X, Y, Z) Omit for Normal (See Section A)	Mod Code Option (See Table II)

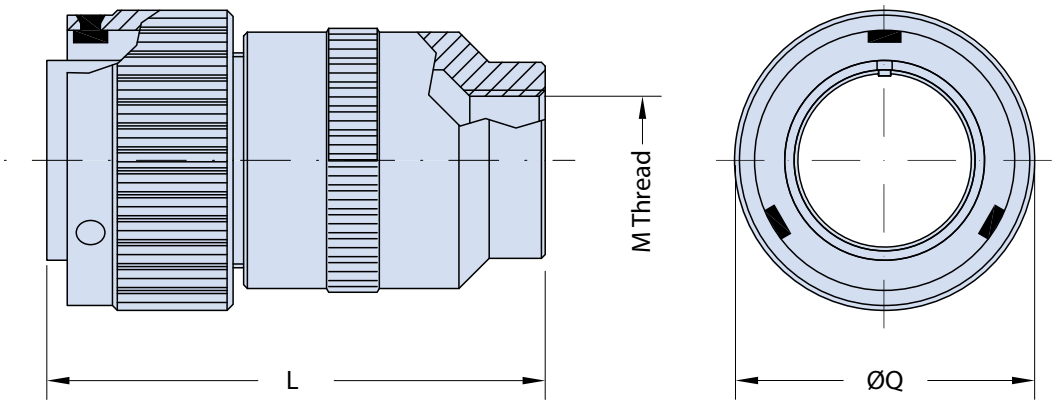

Application Notes

1. Straight cylindrical plug assembly with backshell for attachment of metric thread cable glands. Metric cable glands not included.
2. Connector/Backshell Class "A" (non-environmental)—Not supplied with wire sealing grommet; Class "R" (environmental)—Supplied with grommet.
3. Standard materials configuration consists of aluminum alloy. For platings, see TABLE II finish options.
4. Standard contact material consists of copper alloy with silver plating or gold plating.

© 2015 Glenair, Inc. U.S. CAGE Code 06324 Printed in Italy

Downloaded from Arrow.com.

ITS 3106 A FM and ITS 3106 R FM
ITS 4106 A FM and ITS 4106 R FM
Straight Cylindrical Plug Assembly
with Backshell for Use with Metric Cable Glands

TABLE I: DIMENSIONS

Shell Size	M Thread Other M Threads available on request	L Max.	ØQ ±0.2
10 SL	M12x1,5	52.0	22.6
14 S	M16x1,5	54.5	29.0
16 S	M16x1,5	54.5	31.6
16	M16x1,5	70.0	31.6
18	M20x1,5	71.0	36.2
20	M25x1,5	71.5	39.8
22	M25x1,5	71.5	43.0
24	M32x1,5	71.5	46.4
28	M32x1,5	71.5	53.0
32	M36x1,5	84.0	60.0
36	M40x1,5	109.0	66.2
40	M40x1,5	109.0	72.3

TABLE II: MODIFICATION CODES

STANDARD MATERIAL AND FINISH (*)		
Sym	**Description**	**RoHS**
	Omit for Aluminum/ Cadmium Olive Drab	
F6	Aluminum/ Black Electrodeposited Paint	✓
F7	Aluminum/ Black Zinc Nickel	✓
F11	Aluminum/ Electroless Nickel	✓
MB	Marine Bronze/ Unplated	✓
FK	Stainless Steel/ Passivate	✓

TABLE III

ELASTOMER OPTIONS	
Sym	**Description**
	Omit for Polychloroprene Elastomer
FR	Fire Resistant Elastomer
S	Silicone Elastomer

TABLE IV: MODIFICATION CODES

CONTACT OPTIONS	
Sym	**Description**
B0	Connector without Contacts**
B1	Connector with Gold Plated Contacts
Omit for standard version (Silver plated)	

(*) For further options, please contact the factory.
(**) Crimp Contacts Only

© 2015 Glenair, Inc.

Downloaded from Arrow.com.

ITS 3106 A PHM and ITS 3106 R PHM
ITS 4106 A PHM and ITS 4106 R PHM
Straight Cylindrical Plug Assembly
with Environmental PHM Cable Clamp

Elastomer Option (See Table III)	Grounding Fingers (Omit for Standard)	*06* - Straight Plug	Shell Size and Insert Arrangement (See Section A)	Contact Gender *P* - Pin *S* - Socket	Contact Options (See Table IV)	PHM Size (See Table I)
XX	ITS	G	31	06	A	20-27	P	Y	XX	PHM11	XXX

ITS — Reverse Bayonet Coupling
ITS - Alumium Shell with Stainless Steel Studs
ITB - Marine Bronze or Stainless Steel Shell without Stainless Steel Studs
For further details, see diagram on page A-38

31 — Contact Type
31 - Solder
41 - Crimp

A — Connector/Backshell Class
A - Non-Environmental; Supplied with Backshell Only
R - Environmental; Supplied with Backshell and Grommet

Y — Alternate Insert Rotation (W, X, Y, Z) Omit for Normal (See Section A)

XXX — Mod Code Option (See Table II)

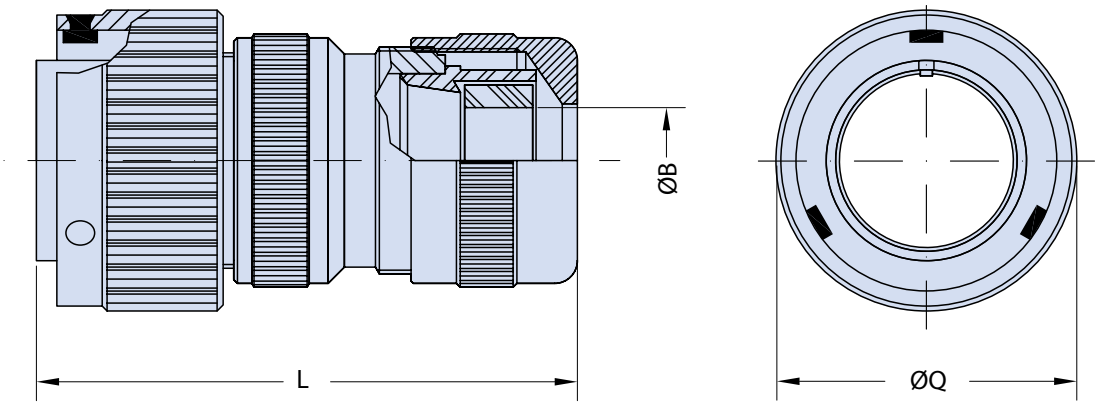

Application Notes

1. Straight plug assembly with a PHM cable clamp.
2. Connector/Backshell Class "A" (non-environmental)—No grommet supplied.
   Connector/Backshell Class "R" (environmental)—Supplied with wire sealing grommet.
3. Standard materials configuration consists of aluminum alloy. For platings, see TABLE II finish options.
4. Standard contact material consists of copper alloy with silver plating or gold plating.

© 2015 Glenair, Inc. U.S. CAGE Code 06324 Printed in Italy

GLENAIR, INC. • 1211 AIR WAY • GLENDALE, CA 91201-2497 • 818-247-6000 • FAX 818-500-9912
www.glenair.com

E-Mail: sales@glenair.com

Downloaded from Arrow.com.

ITS 3106 A PHM and ITS 3106 R PHM
ITS 4106 A PHM and ITS 4106 R PHM
Straight Cylindrical Plug Assembly
with Environmental PHM Cable Clamp

TABLE I: DIMENSIONS

Shell Size	PHM Size	ØB Min. - Max.	L Max.	ØQ ±0.2
10 SL	9	2-9	64.0	22.6
14 S	11	2-11	66.5	29.0
16 S	11	2-11	66.5	31.6
16	11	2-11	77.5	31.6
18	11 / 18	2-11 / 2-16.5	78.0	36.2
20	11 / 18	2-11 / 2-16.5	78.5	39.8
22	18	2-16.5	78.5	43.0
24	18 / 22 / 24	2-16.5 / 15-20 / 19-24	83.5	46.4
28	18 / 22 / 24	2-16.5 / 15-20 / 19-24	89.0	53.0
32	22 / 24	15-20 / 19-24	94.5	60.0
36	35	23-35	106.0	66.2
40	35	23-35	106.0	72.3

TABLE II: MODIFICATION CODES

STANDARD MATERIAL AND FINISH (*)		
Sym	**Description**	**RoHS**
	Omit for Aluminum/ Cadmium Olive Drab	
F6	Aluminum/ Black Electrodeposited Paint	✓
F7	Aluminum/ Black Zinc Nickel	✓
F11	Aluminum/ Electroless Nickel	✓
MB	Marine Bronze/ Unplated	✓
FK	Stainless Steel/ Passivate	✓

TABLE III

ELASTOMER OPTIONS	
Sym	**Description**
	Omit for Polychloroprene Elastomer
FR	Fire Resistant Elastomer
S	Silicone Elastomer

TABLE IV: MODIFICATION CODES

CONTACT OPTIONS	
Sym	**Description**
B0	Connector without Contacts**
B1	Connector with Gold Plated Contacts
Omit for standard version (Silver plated)	

(*) For further options, please contact the factory.

(**) Crimp Contacts Only

© 2015 Glenair, Inc. U.S. CAGE Code 06324 Printed in Italy

Downloaded from Arrow.com.

ITS 3106 A PHM-EMI67 and ITS 4106 A PHM-EMI67
Straight Cylindrical Plug Assembly
with EMI/RFI PHM Backshell

Elastomer Option (See Table III)	Grounding Fingers (Omit for Standard)	*06* - Straight Plug	Shell Size and Insert Arrangement (See Section A)	Contact Gender *P* - Pin *S* - Socket	Contact Options (See Table IV)	PHM Size (See Table I)

XX ITS G 31 06 A 20-27 P Y XX PHM18EMI67 XXX

- **ITS**: Reverse Bayonet Coupling *ITS* - Alumium Shell with Stainless Steel Studs *ITB* - Marine Bronze or Stainless Steel Shell without Stainless Steel Studs. For further details, see diagram on page A-38
- **31**: Contact Type *31* - Solder *41* - Crimp
- **A**: Connector/Backshell Class *A* - Non-Environmental; Supplied with Backshell Only
- **Y**: Alternate Insert Rotation (W, X, Y, Z) Omit for Normal (See Section A)
- **XXX**: Mod Code Option (See Table II)

B

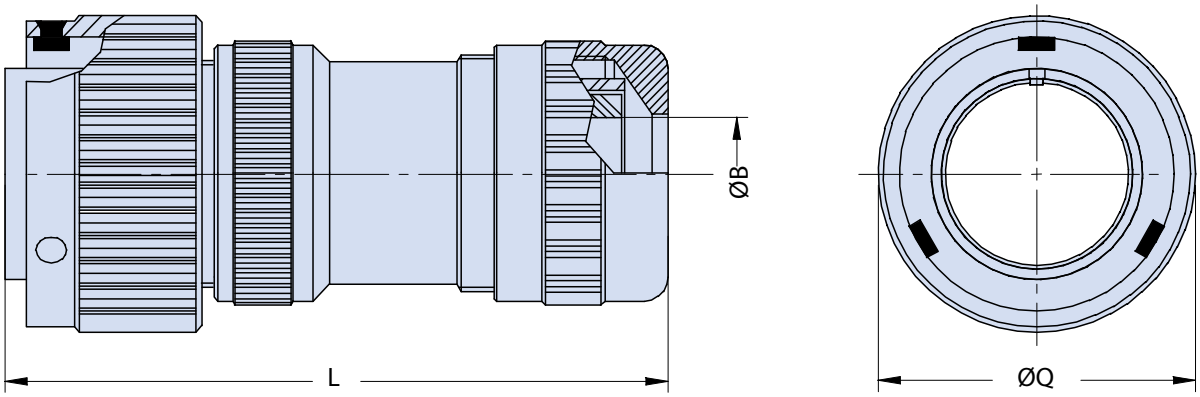

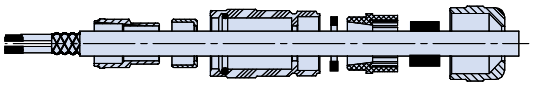

Exploded View

Application Notes

1. Straight plug with an EMI/RFI PHM. Up to IP67 when used with correct neoprene sealing bushing.
2. Connector/Backshell Class "A" (non-environmental)—No grommet supplied.
3. Standard materials configuration consists of aluminum alloy. For platings, see TABLE II finish options.
4. Standard contact material consists of copper alloy with silver plating or gold plating.

© 2015 Glenair, Inc. U.S. CAGE Code 06324 Printed in Italy

Downloaded from Arrow.com.

ITS 3106 A PHM-EMI67 and ITS 4106 A PHM-EMI67
Straight Cylindrical Plug Assembly
with EMI/RFI and Environmental PHM Backshell

TABLE I: DIMENSIONS

Shell Size	PHM Size	ØB Min. - Max.	L Max.	ØQ ±0.2
10 SL	9	2-9	74.0	22.6
14 S	11	2-11	88.5	29.0
16 S	11	2-11	88.5	31.6
16	11	2-11	98.5	31.6
18	18	2-16.5	100.5	36.2
20	18	2-16.5	101.5	39.8
22	18	2-16.5	101.5	43.0
24	22	15-20	104.5	46.4
28	22	15-20	109.0	53.0
32	24	19-24	112.0	60.0
36	35	23-35	118.0	66.2
40	35	23-35	118.0	72.3

TABLE II: MODIFICATION CODES

STANDARD MATERIAL AND FINISH (*)		
Sym	**Description**	**RoHS**
	Omit for Aluminum/ Cadmium Olive Drab	
F7	Aluminum/ Black Zinc Nickel	✓
F11	Aluminum/ Electroless Nickel	✓
MB	Marine Bronze/ Unplated	✓
FK	Stainless Steel/ Passivate	✓

TABLE III

ELASTOMER OPTIONS	
Sym	**Description**
	Omit for Polychloroprene Elastomer
FR	Fire Resistant Elastomer
S	Silicone Elastomer

TABLE IV: MODIFICATION CODES

CONTACT OPTIONS	
Sym	**Description**
B0	Connector without Contacts**
B1	Connector with Gold Plated Contacts
Omit for standard version (Silver plated)	

(*) For further options, please contact the factory.

(**) Crimp Contacts Only

© 2015 Glenair, Inc. U.S. CAGE Code 06324 Printed in Italy

Downloaded from Arrow.com.

ITS 3106 F and ITS 4106 F
Straight Cylindrical Plug Assembly
with Class A IT3057 Cable Clamp and Polychloroprene Bushing

XX	ITS	G	31	06	F	20-27	P	Y	XXX
Elastomer Option (See Table III)	Reverse Bayonet Coupling *ITS* - Alumium Shell with Stainless Steel Studs *ITB* - Marine Bronze or Stainless Steel Shell without Stainless Steel Studs For further details, see diagram on page A-38	Grounding Fingers (Omit for Standard)	Contact Type *31* - Solder *41* - Crimp	*06* - Straight Plug	Connector/Backshell Class *F* - Environmental; Supplied with Backshell, Grommet, Cable Clamp and Polychloroprene Bushing	Shell Size and Insert Arrangement (See Section A)	Contact Gender *P* - Pin *S* - Socket	Alternate Insert Rotation (W, X, Y, Z) Omit for Normal (See Section A)	Mod Code Option (See Table II)

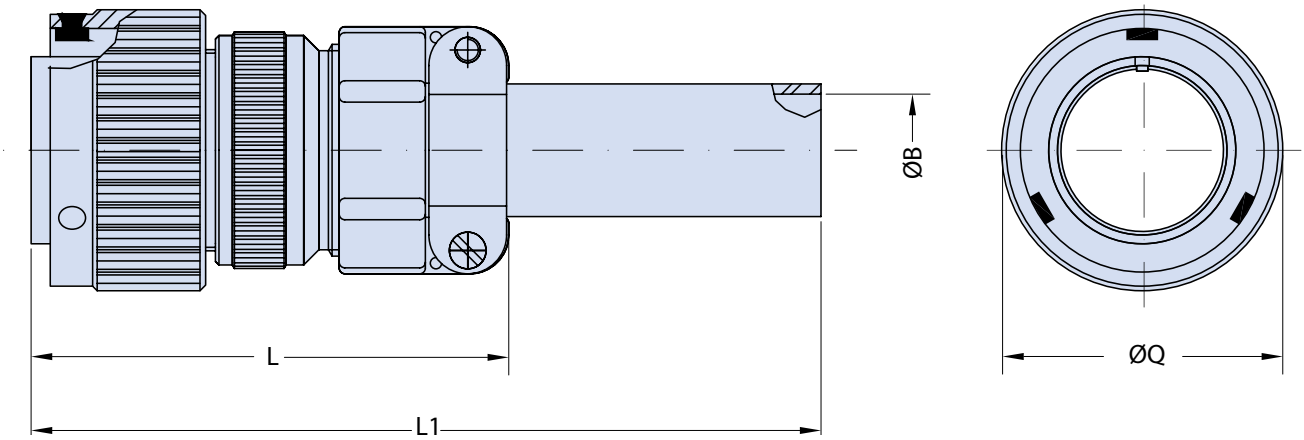

Application Notes

1. Straight plug with an insulating grommet, environmental backshell, class A IT3057cable clamp for individual wires and polychloroprene bushing.
2. Connector/Backshell Class "F" (environmental)—Supplied with wire sealing grommet.
3. Standard materials configuration consists of aluminum alloy. For platings, see TABLE II finish options.
4. Standard contact material consists of copper alloy with silver plating or gold plating.

© 2015 Glenair, Inc. U.S. CAGE Code 06324 Printed in Italy

Downloaded from Arrow.com.

ITS 3106 F and ITS 4106 F
Straight Cylindrical Plug Assembly
with Class A IT3057 Cable Clamp and Polychloroprene Bushing

TABLE I: DIMENSIONS

Shell Size	ØB ±0.1	L Max.	L1 Max.	ØQ ±0.2
10 SL	5.58	56.0	113.5	22.6
14 S	7.92	60.0	113.5	29.0
16 S	11.09	61.5	113.5	31.6
16	11.09	72.5	121.0	31.6
18	14.27	73.0	121.0	36.2
20	15.87	73.5	121.0	39.8
22	15.87	73.5	121.0	43.0
24	19.05	77.5	121.0	46.4
28	19.05	83.0	121.0	53.0
32	23.79	88.0	122.5	60.0
36	31.75	94.5	124.5	66.2
40	34.92	108.5	124.5	72.3

TABLE II: MODIFICATION CODES

CONTACT OPTIONS		
Sym	**Description**	
B0	Connector without Contacts**	
B1	Connector with Gold Plated Contacts	
Omit for standard version (Silver plated)		
STANDARD MATERIAL AND FINISH (*)		
Sym	**Description**	**RoHS**
	Omit for Aluminum/ Cadmium Olive Drab	
F6	Aluminum/ Black Electrodeposited Paint	✓
F7	Aluminum/ Black Zinc Nickel	✓
F11	Aluminum/ Electroless Nickel	✓

(*) For further options, please contact the factory.

(**) Crimp Contacts Only

TABLE III

ELASTOMER OPTIONS	
Sym	**Description**
	Omit for Polychloroprene Elastomer
FR	Fire Resistant Elastomer
S	Silicone Elastomer

© 2015 Glenair, Inc. U.S. CAGE Code 06324 Printed in Italy

Downloaded from Arrow.com.

ITS 3106 A N5 and ITS 3106 R N5
ITS 4106 A N5 and ITS 4106 R N5
Straight Cylindrical Plug Assembly with Class C (Environmental) IT3057 Cable Clamp

Elastomer Option (See Table III)	Grounding Fingers (Omit for Standard)		Shell Size and Insert Arrangement (See Section A)	Contact Gender *P* - Pin *S* - Socket	Contact Options (See Table IV)	Mod Code Option (See Table II)
		06 - Straight Plug				

XX	ITS	G	31	06	A	20-27	P	Y	XX	N5	XXX

Reverse Bayonet Coupling	Contact Type	Connector/Backshell Class	Alternate Insert Rotation	Class "C" Environmental Cable Clamp
ITS - Alumium Shell with Stainless Steel Studs *ITB* - Marine Bronze or Stainless Steel Shell without Stainless Steel Studs For further details, see diagram on page A-38	*31* - Solder *41* - Crimp	*A* - Non-Environmental; Supplied with Backshell Only *R* - Environmental; Supplied with Backshell and Grommet	(W, X, Y, Z) Omit for Normal (See Section A)	

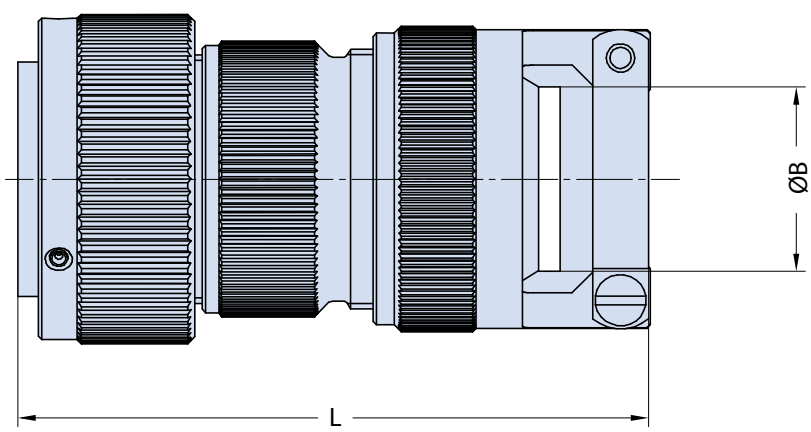

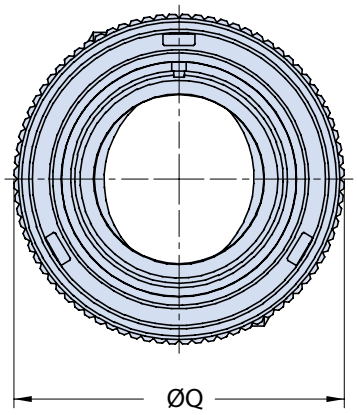

Application Notes

1. Straight cylindrical plug with a class C (environmental) IT3057cable clamp for use with jacketed cable.
2. Connector/Backshell Class "A" (non-environmental)—Not supplied with wire sealing grommet; Class "R" (environmental)—Supplied with grommet.
3. Standard materials configuration consists of aluminum alloy. For platings, see TABLE II finish options.
4. Standard contact material consists of copper alloy with silver plating or gold plating available.

© 2015 Glenair, Inc. U.S. CAGE Code 06324 Printed in Italy

Downloaded from Arrow.com.

ITS 3106 A N5 and ITS 3106 R N5
ITS 4106 A N5 and ITS 4106 R N5
Straight Cylindrical Plug Assembly with Class C (Environmental) IT3057 Cable Clamp

TABLE I: DIMENSIONS

Shell Size	ØB		L Max.	ØQ ±0.2
	Open	Closed		
10 SL	7.93	2.38	73.0	22.6
14 S	11.12	5.84	76.0	29.0
16 S	13.48	8.00	73.0	31.6
16	13.48	8.00	84.0	31.6
18	15.87	9.60	88.0	36.2
20	19.00	11.30	90.0	39.8
22	19.00	11.30	89.0	43.0
24	23.80	15.50	95.0	46.4
28	23.80	15.50	103.0	53.0
32	31.75	23.40	111.0	60.0
36	35.00	23.40	123.0	66.2
40	41.25	29.90	123.0	72.3

TABLE II: MODIFICATION CODES

STANDARD MATERIAL AND FINISH (*)		
Sym	**Description**	**RoHS**
	Omit for Aluminum/ Cadmium Olive Drab	
F6	Aluminum/ Black Electrodeposited Paint	✓
F7	Aluminum/ Black Zinc Nickel	✓
F11	Aluminum/ Electroless Nickel	✓
MB	Marine Bronze/ Unplated	✓
FK	Stainless Steel/ Passivate	✓

TABLE III

ELASTOMER OPTIONS	
Sym	**Description**
	Omit for Polychloroprene Elastomer
FR	Fire Resistant Elastomer
S	Silicone Elastomer

TABLE IV: MODIFICATION CODES

CONTACT OPTIONS	
Sym	**Description**
B0	Connector without Contacts**
B1	Connector with Gold Plated Contacts
Omit for standard version (Silver plated)	

(*) For further options, please contact the factory.

(**) Crimp Contacts Only

© 2015 Glenair, Inc. U.S. CAGE Code 06324 Printed in Italy

Downloaded from Arrow.com.

ITS 3106 G and ITS 4106 G
Straight Cylindrical Plug Assembly
with Environmental Backshell for Heat-Shrink Tubing

XX	ITS	G	31	06	G	20-27	P	Y	XXX
Elastomer Option (See Table III)	Reverse Bayonet Coupling *ITS* - Alumium Shell with Stainless Steel Studs *ITB* - Marine Bronze or Stainless Steel Shell without Stainless Steel Studs For further details, see diagram on page A-38	Grounding Fingers (Omit for Standard)	Contact Type *31* - Solder *41* - Crimp	*06* - Straight Plug	Connector/Backshell Class *G* - Environmental; Supplied with Grommet and Backshell for Heat-Shrink Tubing	Shell Size and Insert Arrangement (See Section A)	Contact Gender *P* - Pin *S* - Socket	Alternate Insert Rotation (W, X, Y, Z) Omit for Normal (See Section A)	Mod Code Option (See Table II)

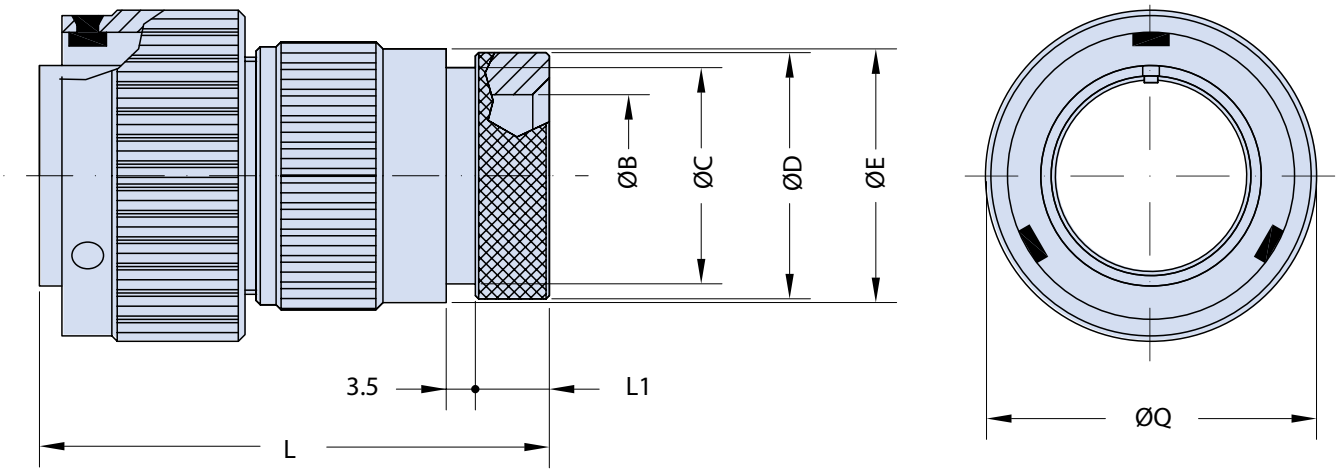

Application Notes

1. Straight cylindrical plug with a backshell for heat-shrink tubing.
2. Connector/Backshell Class "G" (environmental)—Wire sealing grommet supplied.
3. Standard materials configuration consists of aluminum alloy. For platings, see TABLE II finish options.
4. Standard contact material consists of copper alloy with silver plating or gold plating.

© 2015 Glenair, Inc. U.S. CAGE Code 06324 Printed in Italy

Downloaded from Arrow.com.

ITS 3106 G and ITS 4106 G
Straight Cylindrical Plug Assembly
with Environmental Backshell for Heat-Shrink Tubing

TABLE I: DIMENSIONS

Shell Size	ØB Min.	ØC ±0.1	ØD ±0.2	ØE ±0.2	L Max.	L1 Max.	ØQ ±0.2
10 SL	8.5	13.0	15.5	17.0	53.0	8.2	22.6
14 S	12.0	16.5	19.1	20.1	53.0	8.2	29.0
16 S	14.5	21.5	23.9	23.5	53.0	8.2	31.6
16	14.5	21.5	23.9	23.5	66.0	8.0	31.6
18	17.5	21.7	23.9	26.5	66.0	8.0	36.2
20	19.5	26.0	29.6	30.5	66.0	8.9	39.8
22	22.0	26.0	29.6	33.6	66.0	8.9	43.0
24	25.0	34.5	37.8	36.1	66.0	9.2	46.4
28	29.0	34.5	37.8	41.4	66.0	9.2	53.0
32	34.0	43.6	47.8	48.6	84.0	11.7	60.0
36	38.5	43.6	47.8	54.8	84.0	11.7	66.2
40	48.0	51.5	52.4	60.9	84.0	11.7	72.3

TABLE II: MODIFICATION CODES

CONTACT OPTIONS		
Sym	**Description**	
B0	Connector without Contacts**	
B1	Connector with Gold Plated Contacts	
Omit for standard version (Silver plated)		
STANDARD MATERIAL AND FINISH (*)		
Sym	**Description**	**RoHS**
	Omit for Aluminum/ Cadmium Olive Drab	
F6	Aluminum/ Black Electrodeposited Paint	✓
F7	Aluminum/ Black Zinc Nickel	✓
F11	Aluminum/ Electroless Nickel	✓
MB	Marine Bronze/ Unplated	✓
FK	Stainless Steel/ Passivate	✓

(*) For further options, please contact the factory.

(**) Crimp Contacts Only

TABLE III

ELASTOMER OPTIONS	
Sym	**Description**
	Omit for Polychloroprene Elastomer
FR	Fire Resistant Elastomer
S	Silicone Elastomer

© 2015 Glenair, Inc.

Downloaded from Arrow.com.

ITS 3106 GR and ITS 4106 GR
Straight Cylindrical Plug Assembly
with Rotating Coupling Nut Shrink Boot Adapter

XX	ITS	G	31	06	GR	20-27	P	Y	XXX
Elastomer Option (See Table III)	Reverse Bayonet Coupling *ITS* - Alumium Shell with Stainless Steel Studs *ITB* - Marine Bronze or Stainless Steel Shell without Stainless Steel Studs For further details, see diagram on page A-38	Grounding Fingers (Omit for Standard)	Contact Type *31* - Solder *41* - Crimp	*06* - Straight Plug	Connector/Backshell Class *GR* - Environmental; Supplied with Backshell for Heat-Shrink Tubing and Rotating Clamp Nut	Shell Size and Insert Arrangement (See Section A)	Contact Gender *P* - Pin *S* - Socket	Alternate Insert Rotation (W, X, Y, Z) Omit for Normal (See Section A)	Mod Code Option (See Table II)

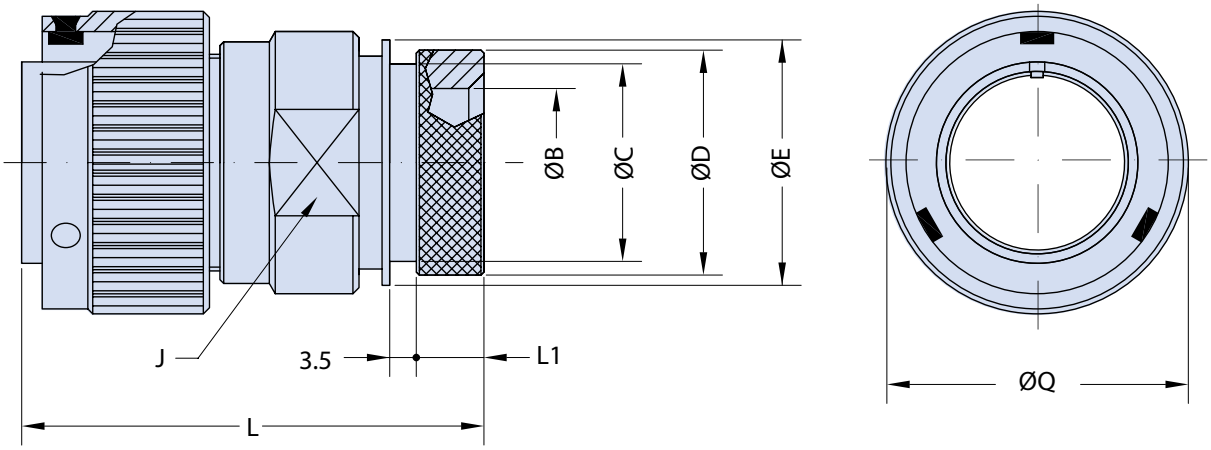

Application Notes

1. Straight cylindrical plug with a backshell for heat shrink tubing. Rotating coupling nut supplied.
2. Connector/Backshell Class "GR" (environmental)—Wire sealing grommet supplied.
3. Standard materials configuration consists of aluminum alloy. For platings, see TABLE II finish options.
4. Standard contact material consists of copper alloy with silver plating or gold plating.

© 2015 Glenair, Inc. U.S. CAGE Code 06324 Printed in Italy

Downloaded from Arrow.com.

ITS 3106 GR and ITS 4106 GR
Straight Cylindrical Plug Assembly
with Rotating Coupling Nut Shrink Boot Adapter

Glenair®

TABLE I: DIMENSIONS

Shell Size	ØB Min.	ØC ±0.1	ØD ±0.2	ØE ±0.1	J Key	L Max.	L1 ±0.1	ØQ ±0.2
10 SL	8.6	13.0	15.5	17.0	20	54.0	8.2	22.6
14 S	10.7	16.5	19.1	20.1	23	54.0	8.2	29.0
16 S	14.0	24.9	23.9	23.5	26	54.0	8.0	31.6
16	14.0	24.9	23.9	23.5	26	61.0	8.0	31.6
18	17.5	21.7	23.9	26.5	28	63.5	8.0	36.2
20	18.8	26.2	29.6	30.2	32	63.5	8.9	39.8
22	21.0	26.2	29.6	33.6	36	63.5	9.2	43.0
24	25.4	34.0	37.8	36.1	39	67.5	9.5	46.4
28	28.4	34.3	37.8	41.4	46	67.5	9.2	53.0
32	34.0	43.6	47.8	48.6	52	69.5	11.7	60.0
36	40.5	43.6	47.8	54.0	58	69.5	11.5	66.2
40	49.0	52.6	57.8	61.0	65	69.5	11.5	72.3

TABLE II: MODIFICATION CODES

CONTACT OPTIONS		
Sym	**Description**	
B0	Connector without Contacts**	
B1	Connector with Gold Plated Contacts	
Omit for standard version (Silver plated)		
STANDARD MATERIAL AND FINISH (*)		
Sym	**Description**	**RoHS**
	Omit for Aluminum/ Cadmium Olive Drab	
F6	Aluminum/ Black Electrodeposited Paint	✓
F7	Aluminum/ Black Zinc Nickel	✓
F11	Aluminum/ Electroless Nickel	✓
MB	Marine Bronze/ Unplated	✓
FK	Stainless Steel/ Passivate	✓

(*) For further options, please contact the factory.

(**) Crimp Contacts Only

TABLE III

ELASTOMER OPTIONS	
Sym	**Description**
	Omit for Polychloroprene Elastomer
FR	Fire Resistant Elastomer
S	Silicone Elastomer

© 2015 Glenair, Inc.

Downloaded from Arrow.com.

ITS 3106 RS and ITS 4106 RS
Straight Cylindrical Plug Assembly
with Lipped Backshell

Elastomer Option (See Table III)	Grounding Fingers (Omit for Standard)	*06* - Straight Plug Assembly	Shell Size and Insert Arrangement (See Section A)	Contact Gender *P* - Pin *S* - Socket	Mod Code Option (See Table II)
XX	G	06	20-27	P	XXX

XX	ITS	G	31	06	RS	20-27	P	Y	XXX

ITS: Reverse Bayonet Coupling
ITS - Alumium Shell with Stainless Steel Studs
ITB - Marine Bronze or Stainless Steel Shell without Stainless Steel Studs
For further details, see diagram on page A-38

31: Contact Type
31 - Solder
41 - Crimp

RS: Connector/Backshell Class
RS - Environmental; Supplied with Grommet and Lipped Backshell

Y: Alternate Insert Rotation (W, X, Y, Z) Omit for Normal (See Section A)

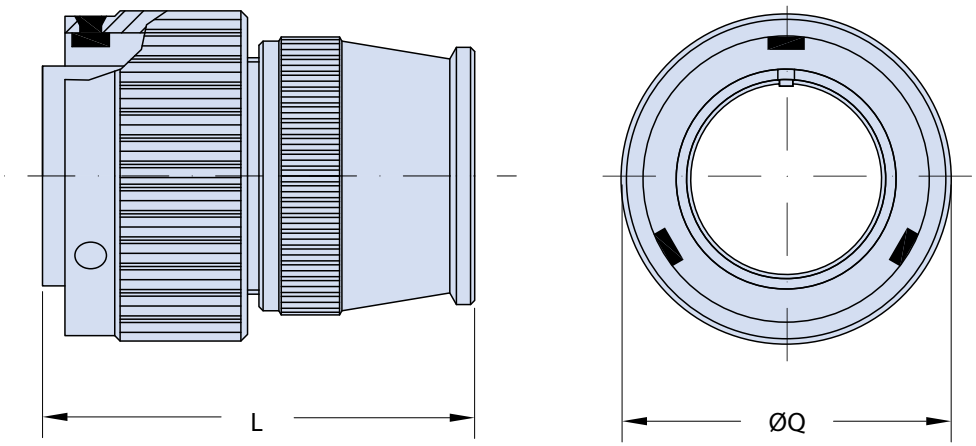

Application Notes

1. Straight plug assembly with a wire sealing grommet and backshell for use with individual wire assemblies.
2. Connector/Backshell Class "RS" (environmental)—Wire sealing grommet supplied.
3. Standard materials configuration consists of aluminum alloy. For platings, see TABLE II finish options.
4. Standard contact material consists of copper alloy with silver plating or gold plating.

© 2015 Glenair, Inc. U.S. CAGE Code 06324 Printed in Italy

Downloaded from Arrow.com.

TABLE I: DIMENSIONS

Shell Size	L Max.	ØQ ±0.2
10 SL	44.0	22.6
14 S	48.5	29.0
16 S	48.5	31.6
16	56.5	31.6
18	57.0	36.2
20	57.0	39.8
22	58.0	43.0
24	58.5	46.4
28	58.5	53.0
32	60.5	60.0
36	60.5	66.2
40	60.5	72.3

TABLE II: MODIFICATION CODES

CONTACT OPTIONS		
Sym	**Description**	
B0	Connector without Contacts**	
B1	Connector with Gold Plated Contacts	
Omit for standard version (Silver plated)		
STANDARD MATERIAL AND FINISH (*)		
Sym	**Description**	**RoHS**
	Omit for Aluminum/ Cadmium Olive Drab	
F6	Aluminum/ Black Electrodeposited Paint	✓
F7	Aluminum/ Black Zinc Nickel	✓
F11	Aluminum/ Electroless Nickel	✓
MB	Marine Bronze/ Unplated	✓
FK	Stainless Steel/ Passivate	✓

(*) For further options, please contact the factory.

(**) Crimp Contacts Only

TABLE III

ELASTOMER OPTIONS	
Sym	**Description**
	Omit for Polychloroprene Elastomer
FR	Fire Resistant Elastomer
S	Silicone Elastomer

© 2015 Glenair, Inc.

Downloaded from Arrow.com.

ITS 3106 SP and ITS G 3106 SP
ITS 4106 SP and ITS G 4106 SP
Straight Cylindrical Plug Assembly
with Environmental Backshell for EMI/RFI Shield Termination

Elastomer Option (See Table III)	Grounding Fingers (Omit for Standard)	*06* - Straight Plug Assembly	Shell Size and Insert Arrangement (See Section A)	Contact Gender *P* - Pin *S* - Socket	Mod Code Option (See Table II)
XX	G	06	20-27	P	XXX

ITS	31	SP	Y
Reverse Bayonet Coupling *ITS* - Alumium Shell with Stainless Steel Studs *ITB* - Marine Bronze or Stainless Steel Shell without Stainless Steel Studs For further details, see diagram on page A-38	Contact Type *31* - Solder *41* - Crimp	Connector/Backshell Class *SP* - Environmental; Supplied with Grommet and EMI/RFI Backshell	Alternate Insert Rotation (W, X, Y, Z) Omit for Normal (See Section A)

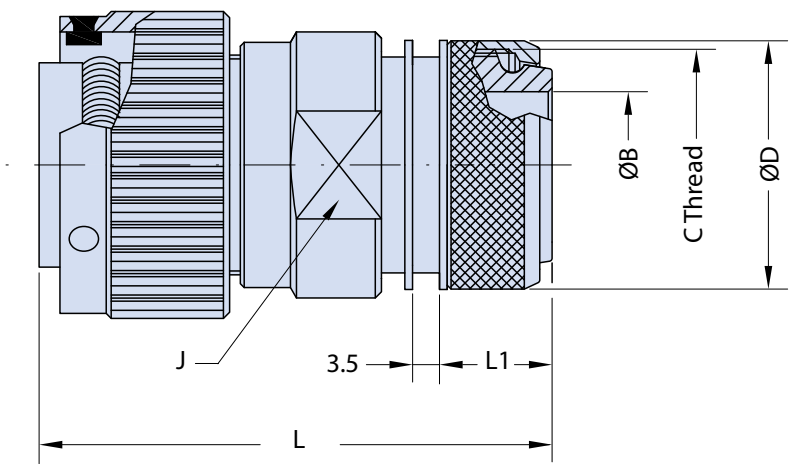

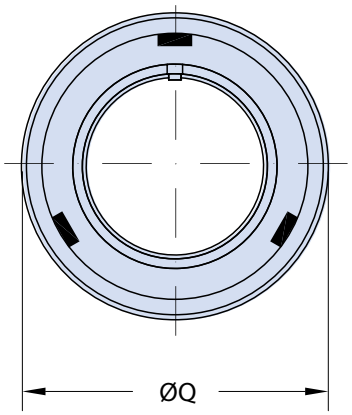

Application Notes

1. Straight plug assembly with EMI/RFI shield termination backshell. Backshell features rotating coupling nut and a "braid-trap" for termination of cable shielding. Heat-shrink tubing may also be attached for additional environmental and mechanical protection.
2. Connector/Backshell Class "SP" (environmental)—Wire sealing grommet supplied.
3. Standard materials configuration consists of aluminum alloy. For platings, see TABLE II finish options.
4. Standard contact material consists of copper alloy with silver plating or gold plating.

© 2015 Glenair, Inc. U.S. CAGE Code 06324 Printed in Italy

Downloaded from Arrow.com.

ITS 3106 SP and ITS G 3106 SP
ITS 4106 SP and ITS G 4106 SP
Straight Cylindrical Plug Assembly
with Environmental Backshell for EMI/RFI Shield Termination

TABLE I: DIMENSIONS

Shell Size	ØB Min.	C Thread	ØD ±0.2	J key	L Max.	L1 Max.	ØQ ±0.2
10 SL	8.6	M16x1	18.5	20	56.0	14.0	22.6
14 S	10.7	M20x1	22.3	23	56.0	14.0	29.0
16 S	13.9	M23x1	25.3	26	58.0	15.6	31.6
16	13.9	M23x1	25.3	26	67.5	15.6	31.6
18	15.0	M26x1	28.0	28	68.5	14.6	36.2
20	18.8	M30x1	32.3	32	68.5	14.6	39.8
22	22.0	M32x1	34.3	36	68.5	14.6	43.0
24	25.0	M36x1	38.3	39	70.0	14.6	46.4
28	28.4	M39x1	41.2	46	70.0	14.6	53.0
32	34.0	M45x1	48.3	52	71.5	14.6	60.0
36	40.5	M52x1	55.0	58	72.0	15.0	66.2
40	49.0	M59x1	62.0	65	72.0	15.5	72.3

TABLE II: MODIFICATION CODES

CONTACT OPTIONS		
Sym	**Description**	
B0	Connector without Contacts**	
B1	Connector with Gold Plated Contacts	
Omit for standard version (Silver plated)		
STANDARD MATERIAL AND FINISH (*)		
Sym	**Description**	**RoHS**
	Omit for Aluminum/ Cadmium Olive Drab	
F7	Aluminum/ Black Zinc Nickel	✓
F11	Aluminum/ Electroless Nickel	✓
MB	Marine Bronze/ Unplated	✓
FK	Stainless Steel/ Passivate	✓

(*) For further options, please contact the factory.

(**) Crimp Contacts Only

TABLE III

ELASTOMER OPTIONS	
Sym	**Description**
	Omit for Polychloroprene Elastomer
FR	Fire Resistant Elastomer
S	Silicone Elastomer

© 2015 Glenair, Inc. U.S. CAGE Code 06324 Printed in Italy

Downloaded from Arrow.com.

ITS 3106 KG AND ITS 4106 KG
Straight Cilindrical Plug Assembly
with Kellem Grip Backshell

XX	ITS	31	06	R	32-12	P	Y	XX	KG3	XXX
Elastomer Option (See Table III)	Reverse Bayonet Coupling *ITS* - Alumium Shell with Stainless Steel Studs *ITB* - Marine Bronze or Stainless Steel Shell without Stainless Steel Studs For further details, see diagram on page A-38	Contact Type *31* - Solder *41* - Crimp	Connector Shell Styles *06* - Straight Plug	Environmental Class *R* - Supplied with Backshell and Grommet	Shell Size and Insert Arrangement (See Section A)	Contact Gender *P* - Pin *S* - Socket	Alternate Insert Rotation (W, X, Y, Z) Omit for Normal (See Section A)	Contact Options (See Table IV)	Kellem Grip Size (See Table I)	Mod Code Option (See Table II)

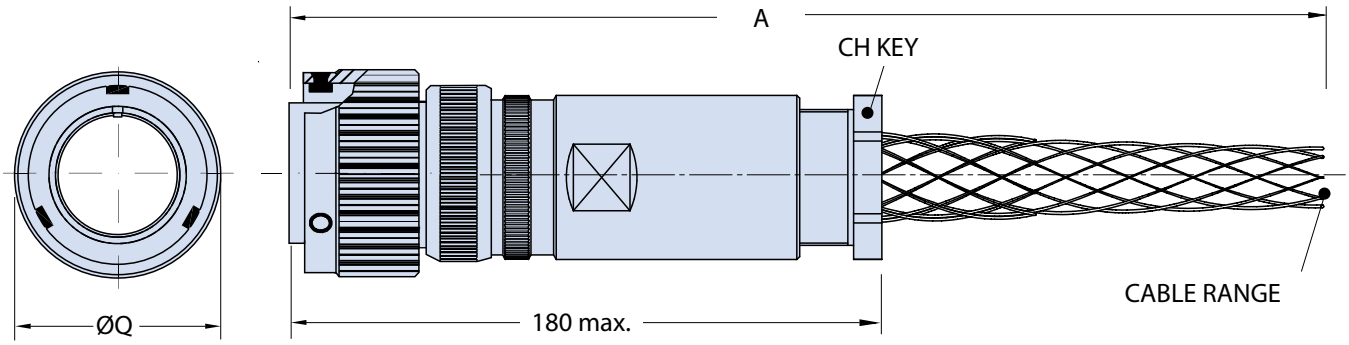

Application Notes

1.Straight cylindrical plug assemply with backshell and kellem grip for heavy duty application.
2. Class "R" (Enviromental): supplied with grommet and rear sleeve in the back nut.
3. Standard materials configuration consists of aluminum alloy. For platings, see Table II finish options.
4. Standard contact material consists of copper alloy with silver plating or gold plating.
5. Kellem Grip: Stainless steel.

© 2015 Glenair, Inc. U.S. CAGE Code 06324 Printed in Italy

Downloaded from Arrow.com.

ITS 3106 KG AND ITS 4106 KG
Straight Cilindrical Plug Assembly
with Kellem Grip Backshell

TABLE I: KELLEM GRIP SIZE AND DIMENSIONS

Kellem Grip Size	Shell Size	Cable Range		A	CH Key	Ø Q ±0.2
		Min.	Max.			
KG1	32	21.10	24.60	380	52	60
KG2		25.50	29.10	380	52	
KG3		26.80	32.00	410	52	
KG4		17.47	21.45	380	52	
KG13		30.10	34.10	420	52	
KG1	36	21.10	24.60	380	52	66.2
KG2		25.50	29.10	380	52	
KG3		26.80	32.00	410	52	
KG4		17.47	21.45	380	52	
KG13		30.10	34.10	420	52	
KG2	40	25.50	29.10	380	52	72.3
KG3		26.80	32.00	380	52	
KG13		30.10	34.10	420	52	
KG15		34.50	38.50	470	62	
KG19		39.40	44.40	500	62	

TABLE II: MODIFICATION CODES

STANDARD MATERIAL AND FINISH (*)		
Sym	**Description**	**RoHS**
	Omit for Aluminum/ Cadmium Olive Drab	
F6	Aluminum/ Black Electrodeposited Paint	✓
F7	Aluminum/ Black Zinc Nickel	✓
F11	Aluminum/ Electroless Nickel	✓
MB	Marine Bronze/ Unplated	✓
FK	Stainless Steel/ Passivate	✓

TABLE III

ELASTOMER OPTIONS	
Sym	**Description**
	Omit for Polychloroprene Elastomer
FR	Fire Resistant Elastomer
S	Silicone Elastomer

TABLE IV: MODIFICATION CODES

CONTACT OPTIONS	
Sym	**Description**
B0	Connector without Contacts**
B1	Connector with Gold Plated Contacts
Omit for standard version (Silver plated)	

(*) For further options, please contact the factory.
(**) Crimp Contacts Only

© 2015 Glenair, Inc. U.S. CAGE Code 06324 Printed in Italy

Downloaded from Arrow.com.

ITS 3106 A ZL and ITS 3106 R ZL
ITS 4106 A ZL and ITS 4106 R ZL
Straight Cylindrical Plug Assembly with BAND-IT Backshell

Elastomer Option (See Table V)	Grounding Fingers (Omit for Standard)	Contact Type *31* - Solder *41* - Crimp	Shell Size and Insert Arrangement (See Section A)	Contact Gender *P* - Pin *S* - Socket	BAND-IT Backshell *ZLF* - Supplied with Metallic Band	Entry Size (See Table II)
XX	G	31	20-27	P	ZL	XX

ITS	06	A	Y	XX	XXX
Reverse Bayonet Coupling *ITS* - Alumium Shell with Stainless Steel Studs *ITB* - Marine Bronze or Stainless Steel Shell without Stainless Steel Studs For further details, see diagram on page A-38	*06* - Straight Plug	Connector/Backshell Class *A* - Non-Environmental; Supplied with Backshell Only *R* - Environmental; Supplied with Backshell and Grommet	Alternate Insert Rotation (W, X, Y, Z) Omit for Normal (See Section A)	Contact Options (See Table III)	Finish Options (See Table IV)

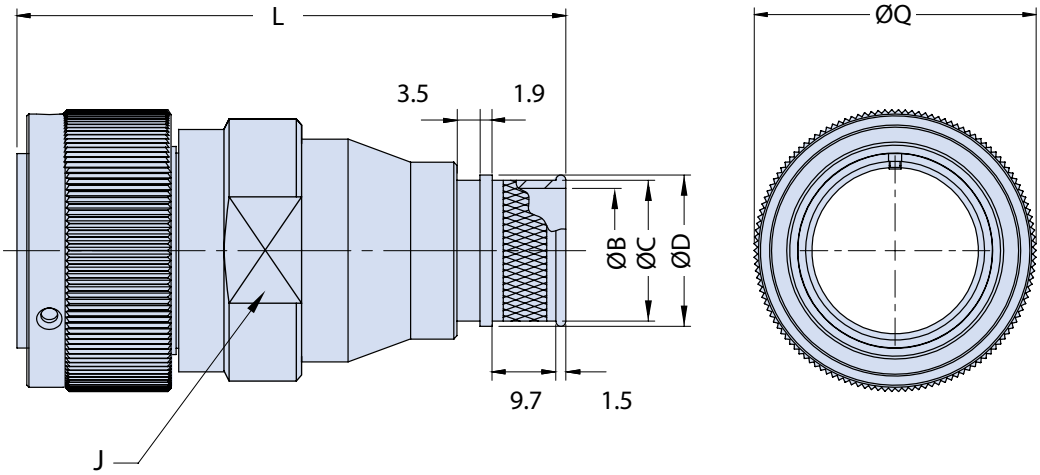

Application Notes

1. Straight cylindrical plug assembly with backshell for attachment of BAND-IT.
2. Connector/Backshell Class "A" (non-environmental)—Not supplied with wire sealing grommet; Class "R" (environmental)—Supplied with grommet.
3. Standard materials configuration consists of aluminum alloy. For platings, see TABLE IV finish options.
4. Standard contact material consists of copper alloy with silver plating or gold plating.

© 2015 Glenair, Inc. U.S. CAGE Code 06324 Printed in Italy

Downloaded from Arrow.com.

ITS 3106 A ZL and ITS 3106 R ZL
ITS 4106 A ZL and ITS 4106 R ZL
Straight Cylindrical Plug Assembly with BAND-IT Backshell

TABLE I: DIMENSIONS

Size	L Max.	ØQ ±0.2	J Key	Entry Size [a]
10 SL	69.5	22.6	20	01÷06
14 S	70.0	29.0	23	03÷08
16 S	70.0	31.6	26	05÷10
16	79.0	31.6	26	05÷10
18	83.5	36.2	28	07÷12
20	94.0	39.8	32	09÷14
22	99.0	43.0	36	11÷16
24	101.0	46.4	39	12÷17
28	106.0	53.0	46	13÷19
32	112.5	60.0	52	17÷22
36	112.5	66.2	58	19÷23
40	117.5	72.3	65	21÷24

(a) For further entry size, please contact the factory.

TABLE II: ENTRY SIZE TABLE

Entry size	ØB	ØC	ØD
01	3.2	6.4	7.9
02	4.8	7.9	9.5
03	6.4	9.5	11.1
04	7.9	11.1	12.7
05	9.5	12.7	14.3
06	11.1	14.3	15.8
07	12.7	15.9	17.4
08	14.3	17.5	19.1
09	15.9	19.1	20.6
10	17.5	20.6	22.2
11	19.1	22.2	23.8
12	20.6	23.8	25.4
13	22.2	25.4	27.0
14	23.8	27.0	28.5
15	25.4	28.6	30.1
16	27.0	30.2	31.8
17	28.6	31.8	33.3
18	31.8	34.9	36.5
19	34.9	38.1	39.7
20	38.1	41.3	42.8
21	41.3	44.5	46.0
22	44.5	47.6	49.2
23	47.6	50.8	52.4
24	50.8	54.0	55.5

TABLE III: MODIFICATION CODES

CONTACT OPTIONS	
Sym	**Description**
B0	Connector without Contacts**
B1	Connector with Gold Plated Contacts
Omit for standard version (Silver plated)	

TABLE IV: MODIFICATION CODES

STANDARD MATERIAL AND FINISH (*)		
Sym	**Description**	**RoHS**
	Omit for Aluminum/ Cadmium Olive Drab	
F7	Aluminum/ Black Zinc Nickel	✓
F11	Aluminum/ Electroless Nickel	✓
MB	Marine Bronze/ Unplated	✓
FK	Stainless Steel/ Passivate	✓

TABLE V

ELASTOMER OPTIONS	
Sym	**Description**
	Omit for Polychloroprene Elastomer
FR	Fire Resistant Elastomer
S	Silicone Elastomer

(*) For further options, please contact the factory.

(**) Crimp Contacts Only

© 2015 Glenair, Inc. U.S. CAGE Code 06324 Printed in Italy

Downloaded from Arrow.com.

ITS 31045 A and ITS 31045 R
ITS 41045 A and ITS 41045 R
Cylindrical Plug Assembly with 45° Backshell

XX	ITS	G	31	045	A	20-27	P	Y	XXX
Elastomer Option (See Table III)	Reverse Bayonet Coupling *ITS* - Alumium Shell with Stainless Steel Studs *ITB* - Marine Bronze or Stainless Steel Shell without Stainless Steel Studs For further details, see diagram on page A-38	Grounding Fingers (Omit for Standard)	Contact Type *31* - Solder	*45°* - Plug Assembly	Connector/Backshell Class *A* - Non-Environmental; Supplied with Backshell Only *R* - Environmental; Supplied with Backshell and Grommet	Shell Size and Insert Arrangement (See Section A)	Contact Gender *P* - Pin *S* - Socket	Alternate Insert Rotation (W, X, Y, Z) Omit for Normal (See Section A)	Mod Code Option (See Table II)

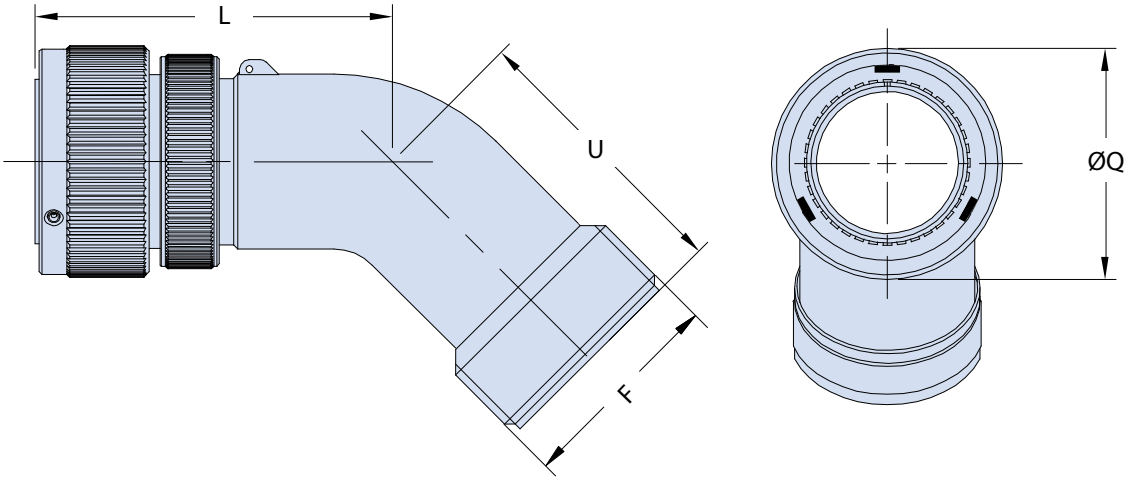

Application Notes

1. 45° plug assembly with backshell for the attachment of strain relief cable clamps.
2 Connector/Backshell Class "A" (non-environmental)—Not supplied with wire sealing grommet; Class "R" (environmental)—Supplied with grommet.
3. Standard materials configuration consists of aluminum alloy. For platings, see TABLE II finish options.
4. Standard contact material consists of copper alloy with silver plating or gold plating.
5. A broad range of other front and rear connector accessories are available. See our website and/or contact the factory for complete information.
6. Order cable clamps separately.

© 2015 Glenair, Inc. U.S. CAGE Code 06324 Printed in Italy

Downloaded from Arrow.com.

ITS 31045 A and ITS 31045 R
ITS 41045 A and ITS 41045 R
Cylindrical Plug Assembly with 45° Backshell

TABLE I: DIMENSIONS

Shell Size	F Thread	L Max.	ØQ ±0.2	U ±0.2
16 S	0.8750 - 20UNEF	55.0	31.6	24.6
16	0.8750 - 20UNEF	64.0	31.6	24.6
18	1.0000 - 20UNEF	68.0	36.2	27.0
20	1.1875 - 18UNEF	73.0	39.8	28.6
22	1.1875 - 18UNEF	73.0	43.0	36.0
24	1.4375 - 18UNEF	81.0	46.4	44.3

For further sizes, please contact the factory.

TABLE II: MODIFICATION CODES

CONTACT OPTIONS		
Sym	**Description**	
B0	Connector without Contacts**	
B1	Connector with Gold Plated Contacts	
Omit for standard version (Silver plated)		
STANDARD MATERIAL AND FINISH (*)		
Sym	**Description**	**RoHS**
	Omit for Aluminum/ Cadmium Olive Drab	
F6	Aluminum/ Black Electrodeposited Paint	✓
F7	Aluminum/ Black Zinc Nickel	✓
F11	Aluminum/ Electroless Nickel	✓

(*) For further options, please contact the factory.

(**) Crimp Contacts Only

TABLE III

ELASTOMER OPTIONS	
Sym	**Description**
	Omit for Polychloroprene Elastomer
FR	Fire Resistant Elastomer
S	Silicone Elastomer

© 2015 Glenair, Inc. U.S. CAGE Code 06324 Printed in Italy

Downloaded from Arrow.com.

ITS 3108 A and ITS 3108 R
ITS 4108 A and ITS 4108 R
Cylindrical Plug Assembly with 90° Backshell

XX	ITS	G	31	08	A	20-27	P	Y	XXX
Elastomer Option (See Table III)	Reverse Bayonet Coupling *ITS* - Alumium Shell with Stainless Steel Studs *ITB* - Marine Bronze or Stainless Steel Shell without Stainless Steel Studs For further details, see diagram on page A-38	Grounding Fingers (Omit for Standard)	Contact Type *31* - Solder *41* - Crimp	*08* - 90° Plug Assembly	Connector/Backshell Class *A* - Non-Environmental; Supplied with Backshell Only *R* - Environmental; Supplied with Backshell and Grommet	Shell Size and Insert Arrangement (See Section A)	Contact Gender *P* - Pin *S* - Socket	Alternate Insert Rotation (W, X, Y, Z) Omit for Normal (See Section A)	Mod Code Option (See Table II)

B

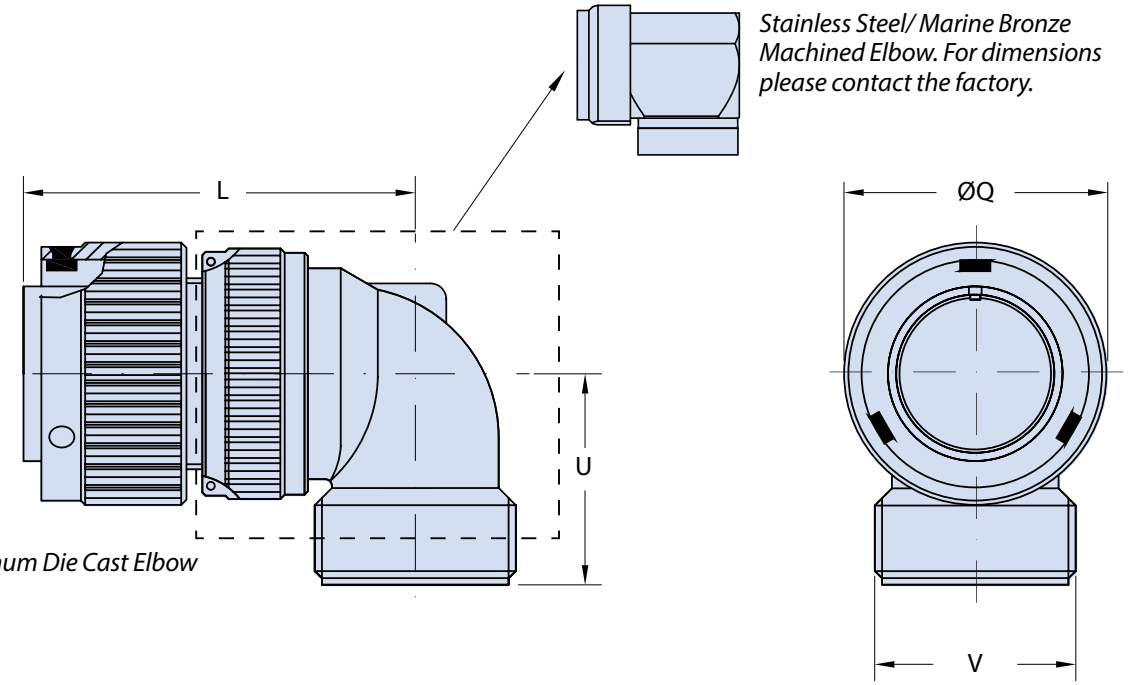

Application Notes

1. 90° plug assembly with backshell for the attachment of strain relief cable clamps.
2. Connector/Backshell Class "A" (non-environmental)—Not supplied with wire sealing grommet; Class "R" (environmental)—Supplied with grommet.
3. Standard materials configuration consists of aluminum alloy. For platings, see TABLE II finish options.
4. Standard contact material consists of copper alloy with silver plating or gold plating.
5. A broad range of other front and rear connector accessories are available. See our website and/or contact the factory for complete information.
6. Order cable clamps separately.

© 2015 Glenair, Inc. U.S. CAGE Code 06324 Printed in Italy

Downloaded from Arrow.com.

ITS 3108 A and ITS 3108 R
ITS 4108 A and ITS 4108 R
Cylindrical Plug Assembly with 90° Backshell

TABLE I: DIMENSIONS

Shell Size	V Thread	L Max.	ØQ ±0.2	U ±0.2
10 SL	0.6250 - 24UNEF	40	22.6	25.0
14 S	0.7500 - 20UNEF	42	29.0	26.5
16 S	0.8750 - 20UNEF	46	31.6	27.0
16	0.8750 - 20UNEF	55	31.6	27.0
18	1.0000 - 20UNEF	57	36.2	30.0
20	1.1875 - 18UNEF	62	39.8	32.0
22	1.1875 - 18UNEF	62	43.0	32.0
24	1.4375 - 18UNEF	67	46.4	37.0
28	1.4375 - 18UNEF	67	53.0	38.0
32	1.7500 - 18UNS	72	60.0	45.5
36	2.0000 - 18UNS	75	66.2	47.2
40	2.2500 - 16UN	78	72.3	52.0

TABLE II: MODIFICATION CODES

CONTACT OPTIONS		
Sym	**Description**	
B0	Connector without Contacts**	
B1	Connector with Gold Plated Contacts	
Omit for standard version (Silver plated)		
STANDARD MATERIAL AND FINISH (*)		
Sym	**Description**	**RoHS**
	Omit for Aluminum/ Cadmium Olive Drab	
F6	Aluminum/ Black Electrodeposited Paint	✓
F7	Aluminum/ Black Zinc Nickel	✓
F11	Aluminum/ Electroless Nickel	✓
MB	Marine Bronze/ Unplated	✓
FK	Stainless Steel/ Passivate	✓

(*) For further options, please contact the factory.

(**) Crimp Contacts Only

TABLE III

ELASTOMER OPTIONS	
Sym	**Description**
	Omit for Polychloroprene Elastomer
FR	Fire Resistant Elastomer
S	Silicone Elastomer

© 2015 Glenair, Inc.

Downloaded from Arrow.com.

ITS 3108 A BR and ITS 3108 R BR
ITS 4108 A BR and ITS 4108 R BR
Cylindrical Plug Assembly
with 90° Backshell for Termination of UNI4883 Rubber Conduits

Elastomer Option (See Table V)	Grounding Fingers (Omit for Standard)	Contact Type *31* - Solder *41* - Crimp	Shell Size and Insert Arrangement (See Section A)	Contact Gender *P* - Pin *S* - Socket	Alternate Insert Rotation (W, X, Y, Z) Omit for Normal (See Section A)	UNI4883 Backshell Adapter Shell Size Designator (See Table II)
XX	G	31	20-27	P	Y	BR2722

XX ITS G 31 08 A 20-27 P Y XX BR2722 XXX

- **ITS** — Reverse Bayonet Coupling
  - *ITS* - Alumium Shell with Stainless Steel Studs
  - *ITB* - Marine Bronze or Stainless Steel Shell without Stainless Steel Studs
  - For further details, see diagram on page A-38
- **08** — *08* - 90° Plug Assembly
- **A** — Connector/Backshell Class
  - *A* - Non-Environmental; Supplied with Backshell Only
  - *R* - Environmental; Supplied with Backshell and Grommet
- **XX** — Contact Options (See Table IV)
- **XXX** — Mod Code Option (See Table III)

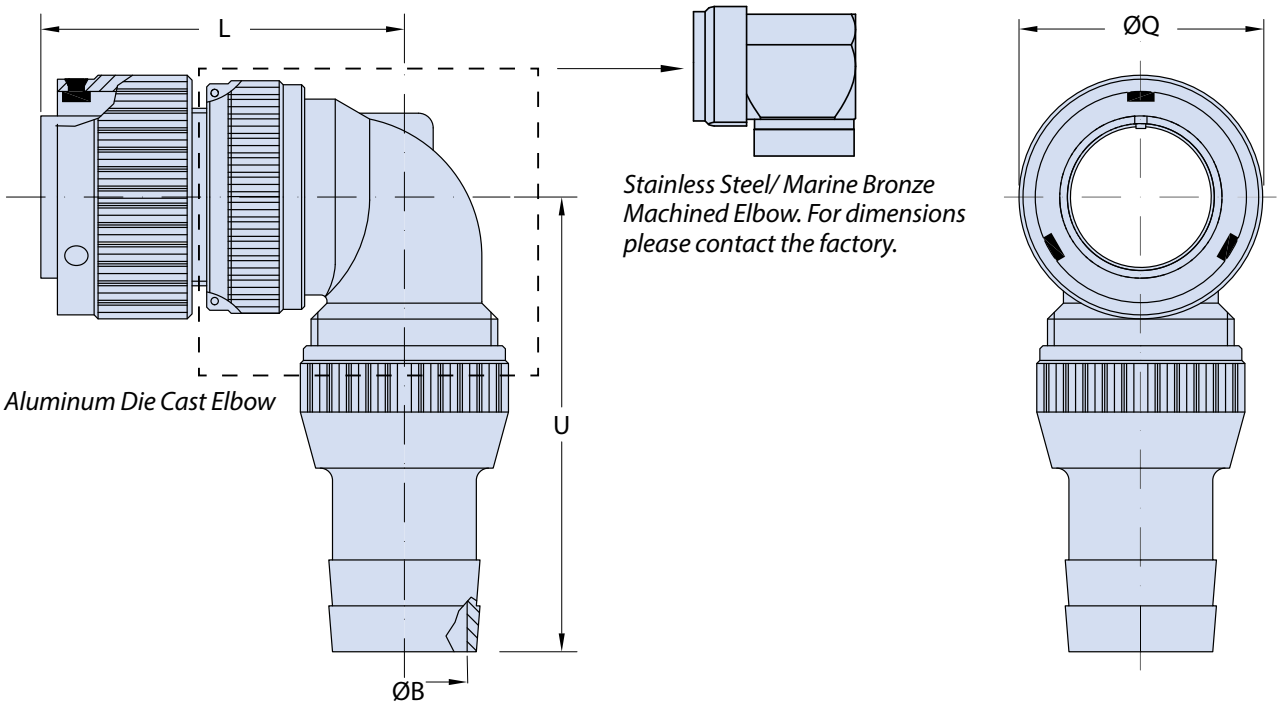

Application Notes

1. 90° plug assembly with backshell for the attachment of strain relief cable clamps.
2. Connector/Backshell Class "A" (non-environmental)—Not supplied with wire sealing grommet; Class "R" (environmental)—Supplied with grommet.
3. Standard materials configuration consists of aluminum alloy. For platings, see TABLE III finish options.
4. Standard contact material consists of copper alloy with silver plating or gold plating.

© 2015 Glenair, Inc. U.S. CAGE Code 06324 Printed in Italy

GLENAIR, INC. • 1211 AIR WAY • GLENDALE, CA 91201-2497 • 818-247-6000 • FAX 818-500-9912
www.glenair.com E-Mail: sales@glenair.com

Downloaded from Arrow.com.

ITS 3108 A BR and ITS 3108 R BR
ITS 4108 A BR and ITS 4108 R BR
Cylindrical Plug Assembly
with 90° Backshell for Termination of UNI4883 Rubber Conduits

TABLE I: DIMENSIONS

Shell Size	ØB ±0.1	L Max.	ØQ ±0.2	U ±0.2
10 SL	See Table II Below	40	22.6	70.0
14 S		42	29.0	71.5
16 S		46	31.6	72.0
16		55	31.6	72.0
18		57	36.2	75.0
20		62	39.8	77.0
22		62	43.0	77.0
24		67	46.4	82.0
28		67	53.0	83.0
32		72	60.0	90.5
36		75	66.2	92.2
40		78	72.3	97.0

TABLE II: BACKSHELL DIMENSIONS

Shell Size	Rubber tube in accordance with UNI 4883 to be used by size		ØB ±0.1
	Ø Min.	Ø Max.	
10 SL	12.0	17.0	10.5
14 S	22.0	27.0	16.5
16-16S	12.0	17.0	10.5
16-16S	15.0	20.0	14.0
18	22.0	27.0	20.5
20 - 22	12.0	17.0	10.5
20 - 22	20.0	25.0	18.5
20 - 22	22.0	27.0	20.5
20 - 22	28.0	33.0	25.0
20 - 22	30.0	35.0	28.5
20 - 22	33.0	38.0	31.5
24 - 28	20.0	25.0	18.5
24 - 28	22.0	27.0	20.5
24 - 28	25.0	30.0	23.5
24 - 28	28.0	33.0	26.5
24 - 28	30.0	35.0	28.5
24 - 28	33.0	38.0	31.5
24 - 28	45.0	50.0	43.5
32	25.0	30.0	23.5
32	28.0	33.0	26.5
32	30.0	35.0	28.5
32	35.0	40.0	31.5
32	40.0	45.0	38.5
32	45.0	50.0	40.0
36	30.0	35.0	28.5
36	35.0	40.0	31.5
36	45.0	50.0	43.5
40	30.0	35.0	28.5
40	35.0	40.0	31.5
40	40.0	45.0	38.5
40	45.0	50.0	43.5
40	50.0	55.0	48.5

TABLE II: MODIFICATION CODES

STANDARD MATERIAL AND FINISH (*)		
Sym	**Description**	**RoHS**
	Omit for Aluminum/ Cadmium Olive Drab	
F6	Aluminum/ Black Electrodeposited Paint	✓
F7	Aluminum/ Black Zinc Nickel	✓
F11	Aluminum/ Electroless Nickel	✓
MB	Marine Bronze/ Unplated	✓
FK	Stainless Steel/ Passivate	✓

TABLE IV: MODIFICATION CODES

CONTACT OPTIONS	
Sym	**Description**
B0	Connector without Contacts**
B1	Connector with Gold Plated Contacts
Omit for standard version (Silver plated)	

TABLE V

ELASTOMER OPTIONS	
Sym	**Description**
	Omit for Polychloroprene Elastomer
FR	Fire Resistant Elastomer
S	Silicone Elastomer

(*) For further options, please contact the factory.

(**) Crimp Contacts Only

© 2015 Glenair, Inc.

U.S. CAGE Code 06324

Printed in Italy

Downloaded from Arrow.com.

ITS 3108 A PG and ITS 3108 R PG
ITS 4108 A PG and ITS 4108 R PG
Cylindrical Plug Assembly
with 90° Backshell for Use with PG Cable Glands

Elastomer Option (See Table III)	Grounding Fingers (Omit for Standard)	Contact Type *31* - Solder *41* - Crimp	Shell Size and Insert Arrangement (See Section A)	Contact Gender *P* - Pin *S* - Socket	Alternate Insert Rotation (W, X, Y, Z) Omit for Normal (See Section A)	Mod Code Option (See Table II)
XX	ITS	G	31	08	A	20-27	P	Y	XX	PG16	XXX

- **ITS** — Reverse Bayonet Coupling
  - *ITS* - Alumium Shell with Stainless Steel Studs
  - *ITB* - Marine Bronze or Stainless Steel Shell without Stainless Steel Studs
  - For further details, see diagram on page A-38
- **08** — *08* - 90° Plug Assembly
- **A** — Connector/Backshell Class
  - *A* - Non-Environmental; Supplied with Backshell Only
  - *R* - Environmental; Supplied with Backshell and Grommet
- **XX** — Contact Options (See Table IV)
- **PG16** — PG Thread (See Table I)

B

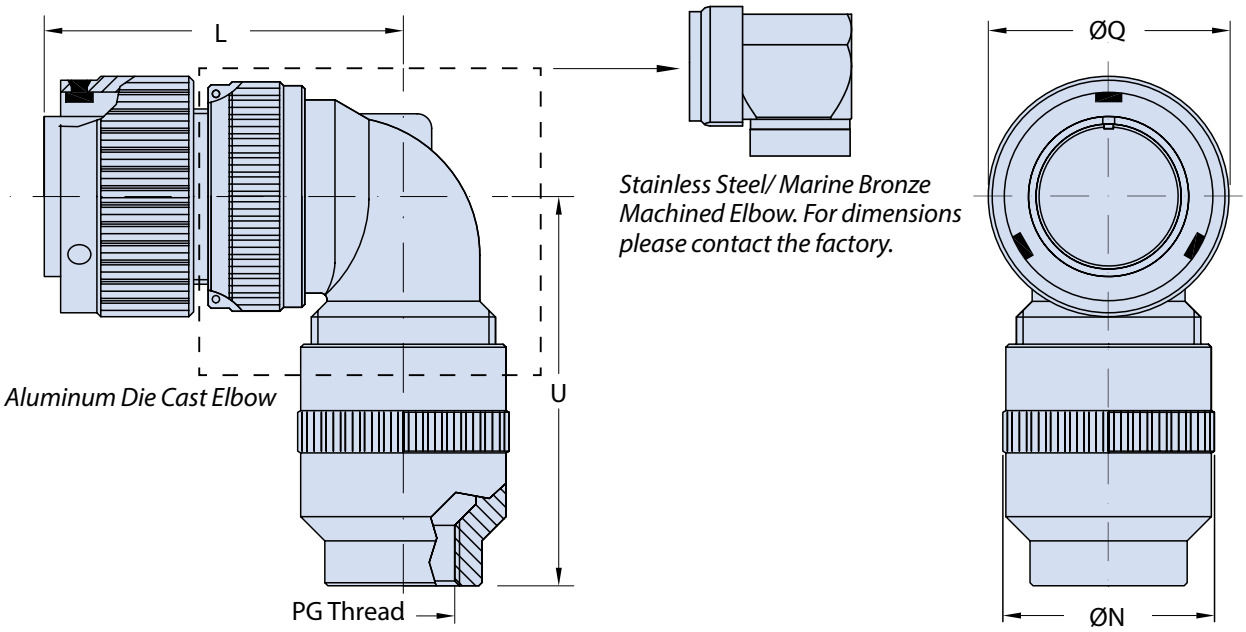

Application Notes

1. 90° plug with backshell for use with PG cable glands (not included).
   Other types of PG adaptors can be supplied in various sizes and angles upon request.
2. Connector/Backshell Class "A" (non-environmental)—Not supplied with wire sealing grommet;
   Class "R" (environmental)—Supplied with grommet.
3. Standard materials configuration consists of aluminum alloy. For platings, see TABLE II finish options.
4. Standard contact material consists of copper alloy with silver plating or gold plating available.

© 2015 Glenair, Inc. U.S. CAGE Code 06324 Printed in Italy

Downloaded from Arrow.com.

ITS 3108 A PG and ITS 3108 R PG
ITS 4108 A PG and ITS 4108 R PG
Cylindrical Plug Assembly
with 90° Backshell for Use with PG Cable Glands

TABLE I: DIMENSIONS

Shell Size	L Max.	ØN Max.	PG Thread Other PG Threads available on request	ØQ ±0.2	U Max.
10 SL	40	26	7 / 9 / 11	22.6	50.0
14 S	42	26	9/ 11 / 13.5	29.0	51.0
16 S	46	26	11 / 13.5 / 16	31.6	60.0
16	55	26	11 / 13.5 / 16	31.6	60.0
18	57	33	13.5 / 16 / 21	36.2	60.0
20	62	43	13.5 / 16 / 21	39.8	60.0
22	62	43	13.5 / 16 / 21	43.0	60.0
24	67	45	16 / 21/ 29	46.4	63.0
28	67	46	16 / 21/ 29	53.0	63.0
32	72	51	16 / 21/ 29	60.0	73.0
36	75	58	21 / 29 / 36	66.2	77.0
40	78	63	21 / 29 / 36	72.3	82.0

TABLE II: MODIFICATION CODES

STANDARD MATERIAL AND FINISH (*)		
Sym	**Description**	**RoHS**
	Omit for Aluminum/ Cadmium Olive Drab	
F6	Aluminum/ Black Electrodeposited Paint	✓
F7	Aluminum/ Black Zinc Nickel	✓
F11	Aluminum/ Electroless Nickel	✓
MB	Marine Bronze/ Unplated	✓
FK	Stainless Steel/ Passivate	✓

TABLE III

ELASTOMER OPTIONS	
Sym	**Description**
	Omit for Polychloroprene Elastomer
FR	Fire Resistant Elastomer
S	Silicone Elastomer

TABLE IV: MODIFICATION CODES

CONTACT OPTIONS	
Sym	**Description**
B0	Connector without Contacts**
B1	Connector with Gold Plated Contacts
Omit for standard version (Silver plated)	

(*) For further options, please contact the factory.

(**) Crimp Contacts Only

© 2015 Glenair, Inc. U.S. CAGE Code 06324 Printed in Italy

Downloaded from Arrow.com.

ITS 3108 A FM and ITS 3108 R FM
ITS 4108 A FM and ITS 4108 R FM
Cylindrical Plug Assembly
with 90° Backshell for Use with Metric Cable Glands

Elastomer Option (See Table III)	Grounding Fingers (Omit for Standard)	Contact Type *31* - Solder *41* - Crimp	Connector/Backshell Class *A* - Non-Environmental; Supplied with Backshell Only *R* - Environmental; Supplied with Backshell and Grommet	Alternate Insert Rotation (W, X, Y, Z) Omit for Normal (See Section A)	Metric Thread (See Table I)

XX	ITS	G	31	08	A	20 -27	P	Y	XX	FM25	XXX

Reverse Bayonet Coupling *ITS* - Alumium Shell with Stainless Steel Studs *ITB* - Marine Bronze or Stainless Steel Shell without Stainless Steel Studs For further details, see diagram on page A-38	*08* - 90° Plug Assembly	Shell Size and Insert Arrangement (See Section A)	Contact Gender *P* - Pin *S* - Socket	Contact Options (See Table IV)	Mod Code Option (See Table II)

B

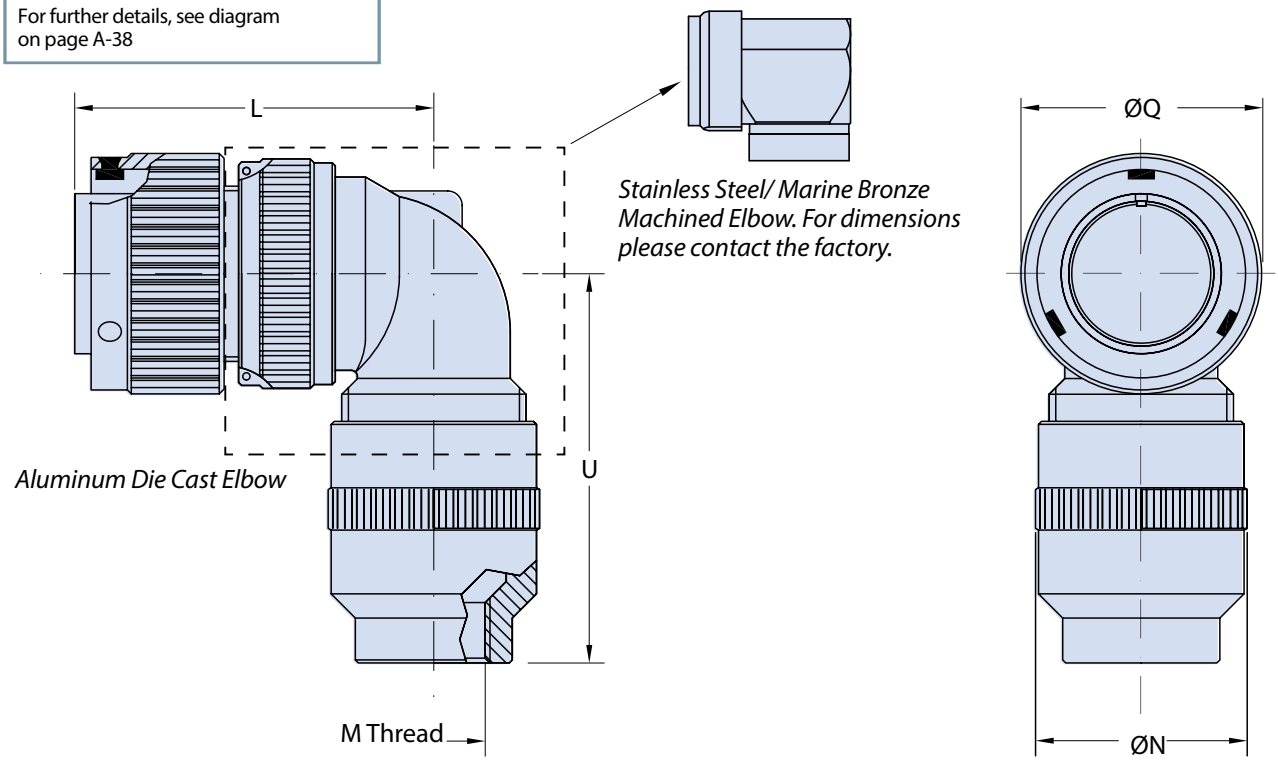

Application Notes

1. 90° plug with backshell for the attachment of metric thread cable glands (not included).
2. Connector/Backshell Class "A" (non-environmental)—Not supplied with wire sealing grommet; Class "R" (environmental)—Supplied with grommet.
3. Standard materials configuration consists of aluminum alloy. For platings, see TABLE II finish options.
4. Standard contact material consists of copper alloy with silver plating or gold plating.

© 2015 Glenair, Inc. U.S. CAGE Code 06324 Printed in Italy

Downloaded from Arrow.com.

ITS 3108 A FM and ITS 3108 R FM
ITS 4108 A FM and ITS 4108 R FM
Cylindrical Plug Assembly
with 90° Backshell for Use with Metric Cable Glands

TABLE I: DIMENSIONS

Shell Size	L Max.	ØN Max.	M Thread Other M Threads Available on request	ØQ ±0.2	U Max.
10 SL	40	25	M12x1,5	22.6	50.0
14 S	42	26	M16x1,5	29.0	55.0
16 S	46	26	M16x1,5	31.6	60.0
16	55	26	M16x1,5	31.6	60.0
18	57	33	M20x1,5	36.2	60.0
20	62	43	M25x1,5	39.8	60.0
22	62	43	M25x1,5	43.0	60.0
24	67	45	M32x1,5	46.4	63.0
28	67	45	M32x1,5	53.0	63.0
32	72	51	M36x1,5	60.0	75.0
36	75	58	M40x1,5	66.2	80.0
40	78	63	M40x1,5	72.3	82.0

TABLE II: MODIFICATION CODES

STANDARD MATERIAL AND FINISH (*)		
Sym	**Description**	**RoHS**
	Omit for Aluminum/ Cadmium Olive Drab	
F6	Aluminum/ Black Electrodeposited Paint	✓
F7	Aluminum/ Black Zinc Nickel	✓
F11	Aluminum/ Electroless Nickel	✓
MB	Marine Bronze/ Unplated	✓
FK	Stainless Steel/ Passivate	✓

TABLE III

ELASTOMER OPTIONS	
Sym	**Description**
	Omit for Polychloroprene Elastomer
FR	Fire Resistant Elastomer
S	Silicone Elastomer

TABLE IV: MODIFICATION CODES

CONTACT OPTIONS	
Sym	**Description**
B0	Connector without Contacts**
B1	Connector with Gold Plated Contacts
Omit for standard version (Silver plated)	

(*) For further options, please contact the factory.

(**) Crimp Contacts Only

© 2015 Glenair, Inc. U.S. CAGE Code 06324 Printed in Italy

Downloaded from Arrow.com.

ITS 3108 A PHM and ITS 3108 R PHM
ITS 4108 A PHM and ITS 4108 R PHM
Cylindrical Plug Assembly with 90° Backshell
with Environmental PHM Backshell

Elastomer Option (See Table III)	Grounding Fingers (Omit for Standard)	Contact Type *31* - Solder *41* - Crimp	Connector/Backshell Class *A* - Non-Environmental; Supplied with Backshell Only *R* - Environmental; Supplied with Backshell and Grommet	Alternate Insert Rotation (W, X, Y, Z) Omit for Normal (See Section A)	PHM Size (See Table I)

XX	ITS	G	31	08	A	20-27	P	Y	XX	PHM11	XXX

- **ITS**: Reverse Bayonet Coupling *ITS* - Alumium Shell with Stainless Steel Studs *ITB* - Marine Bronze or Stainless Steel Shell without Stainless Steel Studs. For further details, see diagram on page A-38
- **08**: *08* - 90° Plug Assembly
- **20-27**: Shell Size and Insert Arrangement (See Section A)
- **P**: Contact Gender *P* - Pin *S* - Socket
- **XX**: Contact Options (See Table IV)
- **XXX**: Mod Code Option (See Table II)

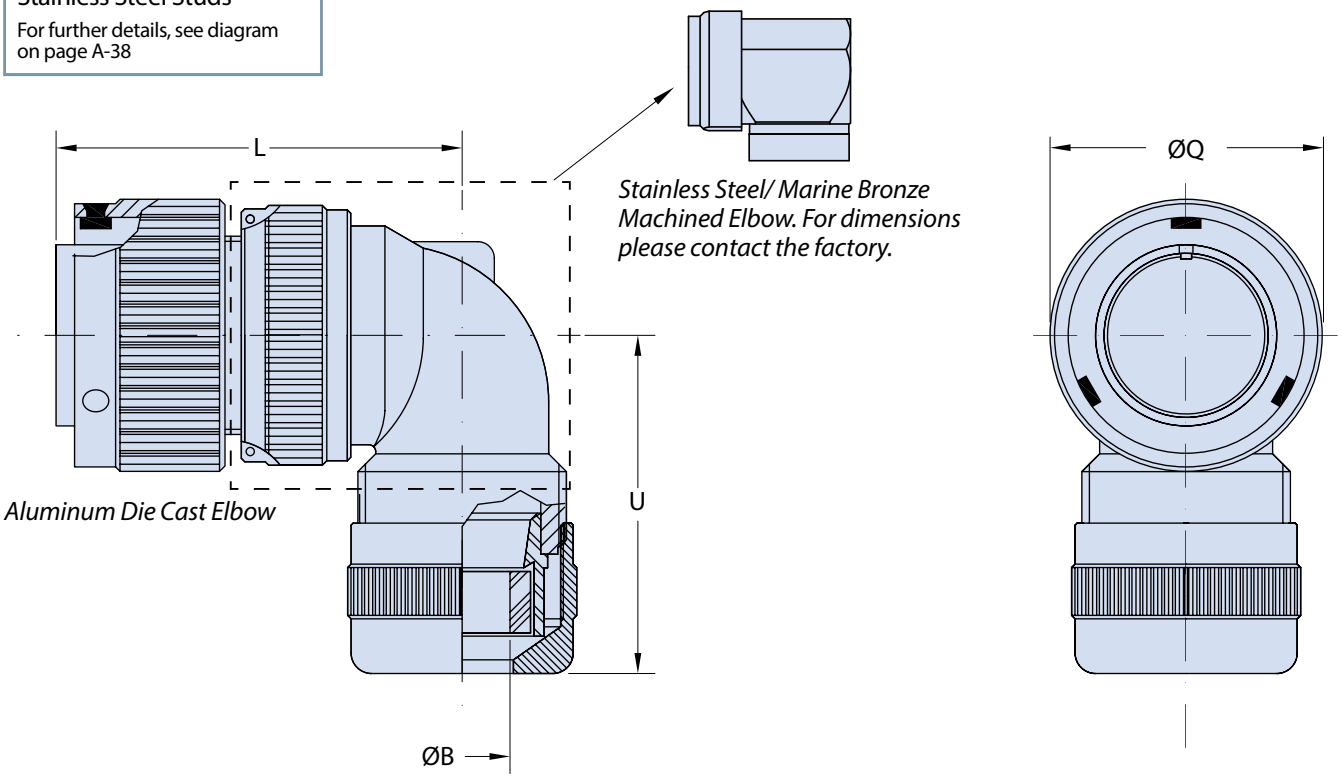

Application Notes

1. 90° plug assembly with a cable-sealing PHM Backshell.
2. Connector/Backshell Class "A" (non-environmental)—Not supplied with wire sealing grommet; Class "R" (environmental)—Supplied with grommet.
3. Standard materials configuration consists of aluminum alloy. For platings, see TABLE II finish options.
4. Standard contact material consists of copper alloy with silver plating or gold plating.

© 2015 Glenair, Inc. U.S. CAGE Code 06324 Printed in Italy

Downloaded from Arrow.com.

ITS 3108 A PHM and ITS 3108 R PHM
ITS 4108 A PHM and ITS 4108 R PHM
Cylindrical Plug Assembly with 90° Backshell
with Environmental PHM Backshell

TABLE I: DIMENSIONS

Shell Size	PHM Size	ØB Min. - Max.	L Max.	ØQ ±0.2	U Max.
10 SL	9	2 - 9	40	22.6	55.0
14 S	11	2 - 11	42	29.0	60.0
16 S	11	2 - 11	46	31.6	55.0
16	11	2 - 11	55	31.6	55.0
18	11 / 18	2 -11 / 2 - 16.5	57	36.2	55.0
20	11 / 18	2 -11 / 2 - 16.5	62	39.8	70.0
22	18	2 - 16.5	62	43.0	65.0
24	18 / 22 / 24	2 - 16.5 / 15 - 20 / 19 - 24	67	46.4	90.0
28	18 / 22 / 24	2 - 16.5 / 15 - 20 / 19 - 24	67	53.0	90.0
32	22 / 24	15 - 20 / 19 - 24	72	60.0	100.0
36	35	23 - 35	75	66.2	120.2
40	35	23 - 35	78	72.3	81.0

TABLE II: MODIFICATION CODES

STANDARD MATERIAL AND FINISH (*)		
Sym	**Description**	**RoHS**
	Omit for Aluminum/ Cadmium Olive Drab	
F6	Aluminum/ Black Electrodeposited Paint	✓
F7	Aluminum/ Black Zinc Nickel	✓
F11	Aluminum/ Electroless Nickel	✓
MB	Marine Bronze/ Unplated	✓
FK	Stainless Steel/ Passivate	✓

TABLE III

ELASTOMER OPTIONS	
Sym	**Description**
	Omit for Polychloroprene Elastomer
FR	Fire Resistant Elastomer
S	Silicone Elastomer

TABLE IV: MODIFICATION CODES

CONTACT OPTIONS	
Sym	**Description**
B0	Connector without Contacts**
B1	Connector with Gold Plated Contacts
Omit for standard version (Silver plated)	

(*) For further options, please contact the factory.

(**) Crimp Contacts Only

© 2015 Glenair, Inc. U.S. CAGE Code 06324 Printed in Italy

Downloaded from Arrow.com.

ITS 3108 F and ITS 4108 F
Cylindrical Plug Assembly with 90° Backshell
with Class A IT3057 Cable Clamp and Polychloroprene Bushing

Reverse Bayonet Coupling
ITS - Alumium Shell with Stainless Steel Studs
ITB - Marine Bronze or Stainless Steel Shell without Stainless Steel Studs
For further details, see diagram on page A-38

Connector/Backshell Class
F - Environmental; Supplied with Backshell, Grommet, Cable Clamp and Polychloroprene Bushing

Alternate Insert Rotation (W, X, Y, Z) Omit for Normal (See Section A)

XX	ITS	G	31	08	F	20-27	P	Y	XXX
Elastomer Option (See Table III)		Grounding Fingers (Omit for Standard)	Contact Type *31* - Solder *41* - Crimp	*08* - 90° Plug Assembly		Shell Size and Insert Arrangement (See Section A)	Contact Gender *P* - Pin *S* - Socket		Mod Code Option (See Table II)

B

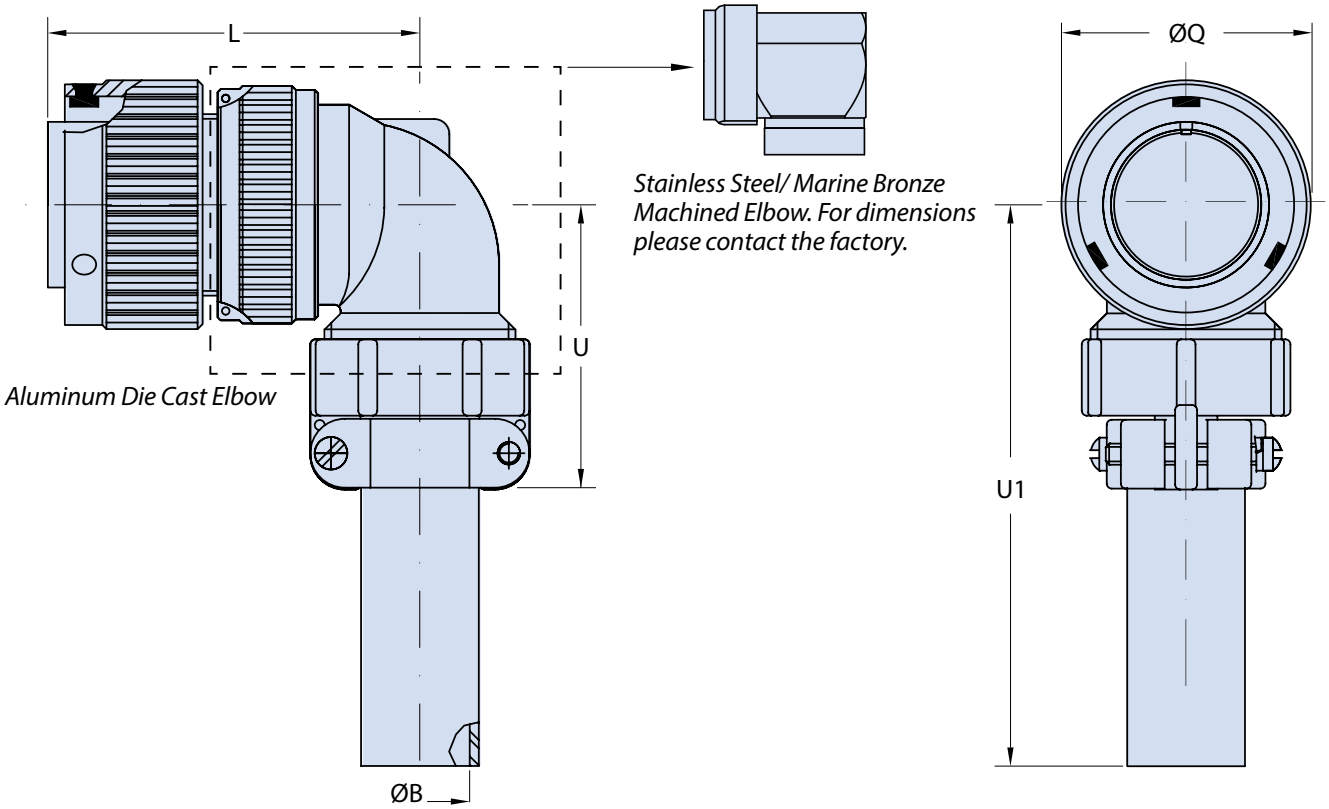

Application Notes

1. 90° plug assembly with an insulating grommet, environmental backshell, class A IT3057 cable clamp for individual wires and polychloroprene bushing.
2. Connector/Backshell Class "F" (environmental)—Wire sealing grommet supplied.
3. Standard materials configuration consists of aluminum. For platings, see TABLE II finish options.
4. Standard contact material consists of copper alloy with silver plating or gold plating.

© 2015 Glenair, Inc. U.S. CAGE Code 06324 Printed in Italy

Downloaded from Arrow.com.

ITS 3108 F and ITS 4108 F
Cylindrical Plug Assembly with 90° Backshell
with Class A IT3057 Cable Clamp and Polychloroprene Bushing

TABLE I: DIMENSIONS

Shell Size	ØB ±0.1	L Max.	ØQ ±0.2	U Max.	U1 Max.
10 SL	5.58	40	22.6	36.0	105
14 S	7.92	42	29.0	38.5	105
16 S	11.09	46	31.6	41.0	105
16	11.09	55	31.6	41.0	105
18	14.27	57	36.2	50.0	105
20	15.87	62	39.8	48.0	105
22	15.87	62	43.0	48.0	105
24	19.05	67	46.4	54.0	107
28	19.05	67	53.0	55.0	107
32	23.79	72	60.0	64.5	115
36	31.75	75	66.2	67.2	115
40	34.92	78	72.3	91.0	135

TABLE II: MODIFICATION CODES

CONTACT OPTIONS		
Sym	**Description**	
B0	Connector without Contacts**	
B1	Connector with Gold Plated Contacts	
Omit for standard version (Silver plated)		
STANDARD MATERIAL AND FINISH (*)		
Sym	**Description**	**RoHS**
	Omit for Aluminum/ Cadmium Olive Drab	
F6	Aluminum/ Black Electrodeposited Paint	✓
F7	Aluminum/ Black Zinc Nickel	✓
F11	Aluminum/ Electroless Nickel	✓

(*) For further options, please contact the factory.

(**) Crimp Contacts Only

TABLE III

ELASTOMER OPTIONS	
Sym	**Description**
	Omit for Polychloroprene Elastomer
FR	Fire Resistant Elastomer
S	Silicone Elastomer

© 2015 Glenair, Inc.

Downloaded from Arrow.com.

ITS 3108 A N5 and ITS 3108 R N5
ITS 4108 A N5 and ITS4108 R N5
Cylindrical Plug Assembly with 90° Backshell
with Class C (Environmental) IT3057 Cable Clamp

Elastomer Option (See Table III)	Grounding Fingers (Omit for Standard)	Connector/Backshell Class *A* - Non-Environmental; Supplied with Backshell Only *R* - Environmental; Supplied with Backshell and Grommet	Alternate Insert Rotation (W, X, Y, Z) Omit for Normal (See Section A)	Contact Options (See Table IV)	Mod Code Option (See Table II)

XX	ITS	G	31	08	A	20-27	P	Y	XX	N5	XXX

Reverse Bayonet Coupling *ITS* - Alumium Shell with Stainless Steel Studs *ITB* - Marine Bronze or Stainless Steel Shell without Stainless Steel Studs For further details, see diagram on page A-38	Contact Type *31* - Solder *41* - Crimp	*08* - 90° Plug Assembly	Shell Size and Insert Arrangement (See Section A)	Contact Gender *P* - Pin *S* - Socket	Class "C" Environmental Cable Clamp

B

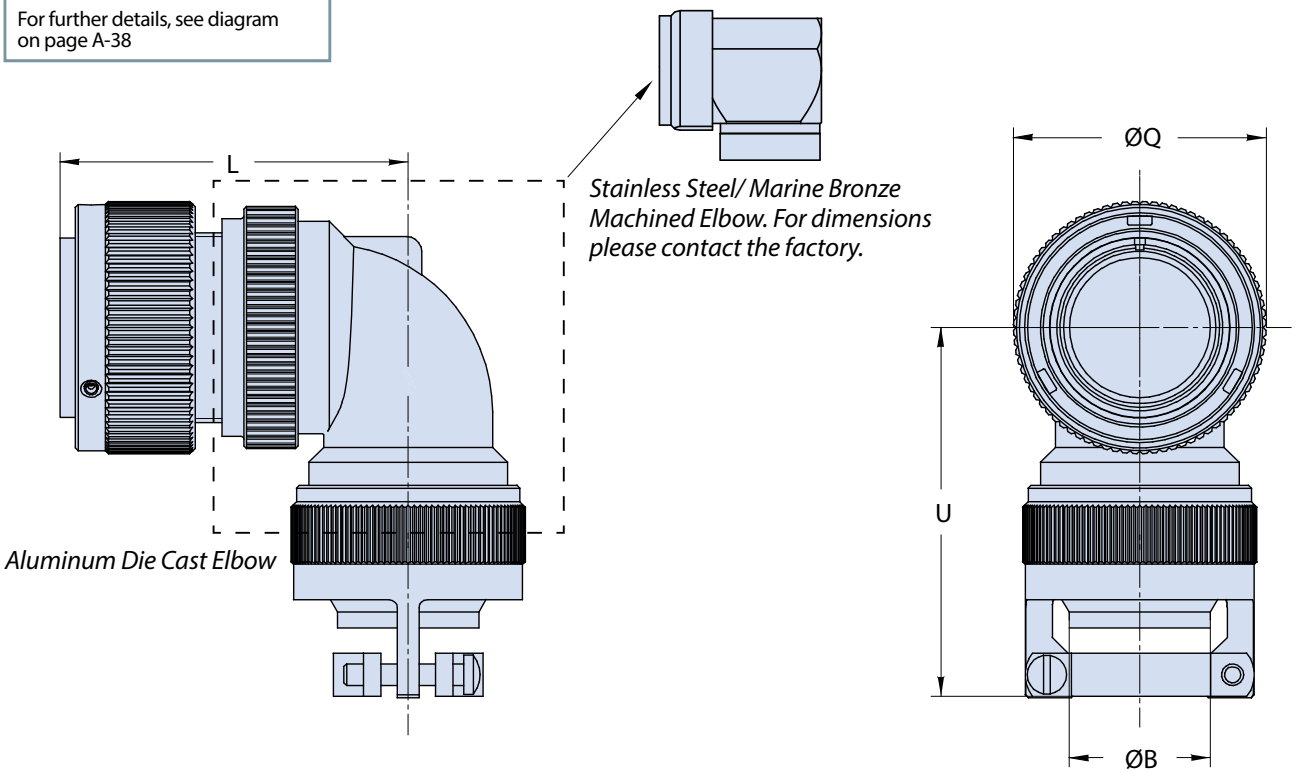

Application Notes

1. 90° plug assembly with a class "C" (environmental) IT3057 cable clamp for use with jacketed cable.
2. Connector/Backshell Class "A" (non-environmental)—Not supplied with wire sealing grommet; Class "R" (environmental)—Supplied with wire sealing grommet.
3. Standard materials configuration consists of aluminum alloy. For platings, see TABLE II finish options.
4. Standard contact material consists of copper alloy with silver plating or gold plating.

© 2015 Glenair, Inc. U.S. CAGE Code 06324 Printed in Italy

Downloaded from Arrow.com.

ITS 3108 A N5 and ITS 3108 R N5
ITS 4108 A N5 and ITS4108 R N5
Cylindrical Plug Assembly with 90° Backshell
with Class C (Environmental) IT3057 Cable Clamp

TABLE I: DIMENSION

Shell Size	ØB		L Max.	ØQ ±0.2	U Max.
	Open	Closed			
10 SL	7.93	2.38	40	22.6	65
14 S	11.12	5.84	42	29.0	65
16 S	13.48	8.00	46	31.6	65
16	13.48	8.00	55	31.6	70
18	15.87	9.60	57	36.2	70
20	19.00	11.30	62	39.8	70
22	19.00	11.30	62	43.0	70
24	23.80	15.50	67	46.4	78
28	23.80	15.50	67	53.0	78
32	31.75	23.40	72	60.0	90
36	35.00	23.40	75	66.2	103
40	41.25	29.90	78	72.3	106

TABLE II: MODIFICATION CODES

STANDARD MATERIAL AND FINISH (*)		
Sym	**Description**	**RoHS**
	Omit for Aluminum/ Cadmium Olive Drab	
F6	Aluminum/ Black Electrodeposited Paint	✓
F7	Aluminum/ Black Zinc Nickel	✓
F11	Aluminum/ Electroless Nickel	✓
MB	Marine Bronze/ Unplated	✓
FK	Stainless Steel/ Passivate	✓

TABLE III

ELASTOMER OPTIONS	
Sym	**Description**
	Omit for Polychloroprene Elastomer
FR	Fire Resistant Elastomer
S	Silicone Elastomer

TABLE IV: MODIFICATION CODES

CONTACT OPTIONS	
Sym	**Description**
B0	Connector without Contacts**
B1	Connector with Gold Plated Contacts
Omit for standard version (Silver plated)	

(*) For further options, please contact the factory.

(**) Crimp Contacts Only

© 2015 Glenair, Inc.

Downloaded from Arrow.com.

ITS 3108 GR and ITS 4108 GR
Cylindrical Plug Assembly with 90° Backshell
and Rotating Coupling Nut Backshell for Heat Shrink Tubing

Reverse Bayonet Coupling
ITS - Alumium Shell with Stainless Steel Studs
ITB - Marine Bronze or Stainless Steel Shell without Stainless Steel Studs
For further details, see diagram on page A-38

Connector/Backshell Class
GR - Environmental; Supplied with Backshell for Heat-Shrink Tubing and Rotating Clamp Nut

Contact Gender
P - Pin
S - Socket

Mod Code Option (See Table II)

XX	ITS	G	31	08	GR	20-27	P	Y	XXX
Elastomer Option (See Table III)		Grounding Fingers (Omit for Standard)	Contact Type *31* - Solder *41* - Crimp	*08* - 90° Plug Assembly		Shell Size and Insert Arrangement (See Section A)		Alternate Insert Rotation (W, X, Y, Z) Omit for Normal (See Section A)	

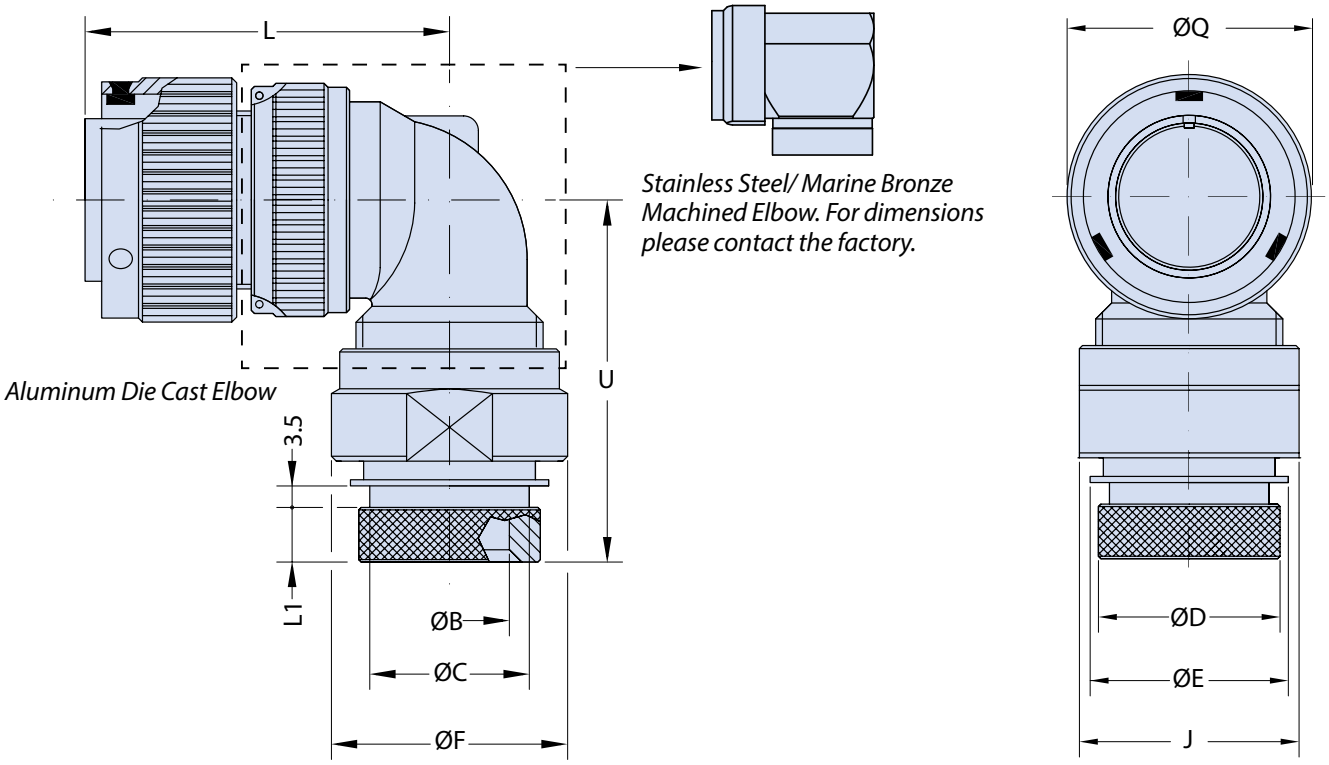

Application Notes

1. 90° plug with backshell for heat-shrink tubing. Rotating coupling nut supplied
2. Connector/Backshell Class "GR" (environmental)—Wire sealing grommet supplied.
3. Standard materials configuration consists of aluminum alloy. For platings, see TABLE II finish options.
4. Standard contact material consists of copper alloy with silver plating or gold plating.

© 2015 Glenair, Inc. U.S. CAGE Code 06324 Printed in Italy

Downloaded from Arrow.com.

ITS 3108 GR and ITS 4108 GR
Cylindrical Plug Assembly with 90° Backshell
and Rotating Coupling Nut Backshell for Heat Shrink Tubing

TABLE I: DIMENSION

Shell Size	ØB Min.	ØC +0 -0.2	ØD ±0.2	ØE ±0.2	ØF ±0.2	J Key	L Max.	L1 ±0.1	ØQ ±0.2	U Max.
10 SL	8.6	13.0	15.5	17.0	22	20	40.0	8.2	22.6	55.0
14 S	10.7	16.5	19.1	22.3	25	23	42.0	8.2	29.0	57.0
16 S	14.0	21.5	23.9	25.3	28	26	46.0	8.0	31.6	60.0
16	14.0	21.7	23.9	25.3	28	26	55.0	8.0	31.6	63.0
18	17.5	21.7	23.9	28.0	30	28	57.0	8.0	36.2	64.0
20	18.8	26.2	29.6	30.2	36	34	62.0	8.9	39.8	60.0
22	21.0	26.0	29.6	34.3	38	36	62.0	9.2	43.0	67.0
24	25.4	34.5	37.8	38.3	43	41	67.0	9.5	46.4	70.0
28	28.4	34.3	37.8	41.4	44	42	67.0	9.2	53.0	70.0
32	34.0	43.6	47.8	48.6	54	52	72.0	11.7	60.0	80.0
36	39.5	43.6	47.8	54.8	61	58	75.0	11.5	66.2	80.0
40	49.0	52.6	57.8	61.0	68	65	78.0	11.5	72.3	85.0

TABLE II: MODIFICATION CODES

CONTACT OPTIONS		
Sym	**Description**	
B0	Connector without Contacts**	
B1	Connector with Gold Plated Contacts	
Omit for standard version (Silver plated)		
STANDARD MATERIAL AND FINISH (*)		
Sym	**Description**	**RoHS**
	Omit for Aluminum/ Cadmium Olive Drab	
F6	Aluminum/ Black Electrodeposited Paint	✓
F7	Aluminum/ Black Zinc Nickel	✓
F11	Aluminum/ Electroless Nickel	✓
MB	Marine Bronze/ Unplated	✓
FK	Stainless Steel/ Passivate	✓

(*) For further options, please contact the factory.

(**) Crimp Contacts Only

TABLE III

ELASTOMER OPTIONS	
Sym	**Description**
	Omit for Polychloroprene Elastomer
FR	Fire Resistant Elastomer
S	Silicone Elastomer

© 2015 Glenair, Inc.

Downloaded from Arrow.com.

ITS 3108 GS and ITS 4108 GS
Cylindrical Plug Assembly with 90° Backshell
with Grommet and Backshell for Heat Shrink Tubing

Reverse Bayonet Coupling
ITS - Alumium Shell with Stainless Steel Studs
ITB - Marine Bronze or Stainless Steel Shell without Stainless Steel Studs
For further details, see diagram on page A-38

Connector/Backshell Class
GS - Environmental; Supplied with Grommet and Backshell for Head Shrink Tubing

Contact Gender
P - Pin
S - Socket

Mod Code Option (See Table II)

XX	ITS	G	31	08	GS	20-27	P	Y	XXX
Elastomer Option (See Table III)		Grounding Fingers (Omit for Standard)	Contact Type *31* - Solder *41* - Crimp	*08* - 90° Plug Assembly		Shell Size and Insert Arrangement (See Section A)		Alternate Insert Rotation (W, X, Y, Z) Omit for Normal (See Section A)	

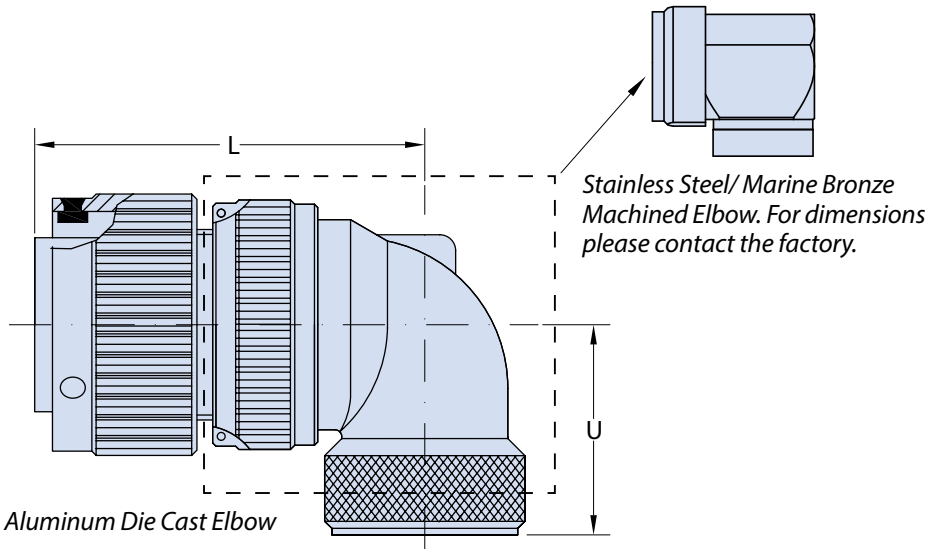

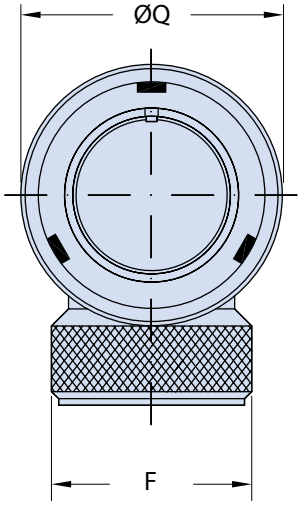

Application Notes

1. 90° plug assembly with backshell with knurl for heat shrink tubing.
2. Connector Backshell Class "GS" - Environmental; Supplied with Grommet;
3. Standard contact material consists of copper alloy with silver plating or gold plating.
4. A broad range of other front and rear connector accessories are available.
   See our website and/or contact the factory for complete information.

© 2015 Glenair, Inc. U.S. CAGE Code 06324 Printed in Italy

Downloaded from Arrow.com.

TABLE I: DIMENSION

Shell Size	L Max.	ØQ ±0.2	ØF +0 -0.5	U Max.
10 SL	40	22.6	15.9	30.0
14 S	42	29.0	19.1	30.0
16 S	46	31.6	22.3	30.0
16	55	31.6	22.3	30.0
18	57	36.2	25.5	35.0
20	62	39.8	30.2	35.0
22	62	43.0	30.2	35.0
24	67	46.4	36.6	40.0
28	67	53.0	36.6	40.0
32	72	60.0	44.5	46.0
36	75	66.2	50.9	50.0
40	78	72.3	57.2	54.6

TABLE II: MODIFICATION CODES

CONTACT OPTIONS		
Sym	**Description**	
B0	Connector without Contacts**	
B1	Connector with Gold Plated Contacts	
Omit for standard version (Silver plated)		
STANDARD MATERIAL AND FINISH (*)		
Sym	**Description**	**RoHS**
	Omit for Aluminum/ Cadmium Olive Drab	
F6	Aluminum/ Black Electrodeposited Paint	✓
F7	Aluminum/ Black Zinc Nickel	✓
F11	Aluminum/ Electroless Nickel	✓
MB	Marine Bronze/ Unplated	✓
FK	Stainless Steel/ Passivate	✓

(*) For further options, please contact the factory.

(**) Crimp Contacts Only

TABLE III

ELASTOMER OPTIONS	
Sym	**Description**
	Omit for Polychloroprene Elastomer
FR	Fire Resistant Elastomer
S	Silicone Elastomer

© 2015 Glenair, Inc.

Downloaded from Arrow.com.

ITS 3108 SP and ITS G 3108 SP
ITS 4108 SP and ITS G 4108 SP
Cylindrical Plug Assembly with 90° Backshell
and EMI/RFI Shield Termination Backshell

Reverse Bayonet Coupling
ITS - Alumium Shell with Stainless Steel Studs
ITB - Marine Bronze or Stainless Steel Shell without Stainless Steel Studs
For further details, see diagram on page A-38

Connector/Backshell Class
SP - Environmental; Supplied with Grommet and EMI/RFI Backshell

Shell Size and Insert Arrangement (See Section A)

Alternate Insert Rotation (W, X, Y, Z) Omit for Normal (See Section A)

XX	ITS	G	31	08	SP	20-27	P	Y	XXX

Elastomer Option (See Table III)

Grounding Fingers (Omit for Standard)

Contact Type
31 - Solder
41 - Crimp

08 - 90° Plug Assembly

Contact Gender
P - Pin
S - Socket

Mod Code Option (See Table II)

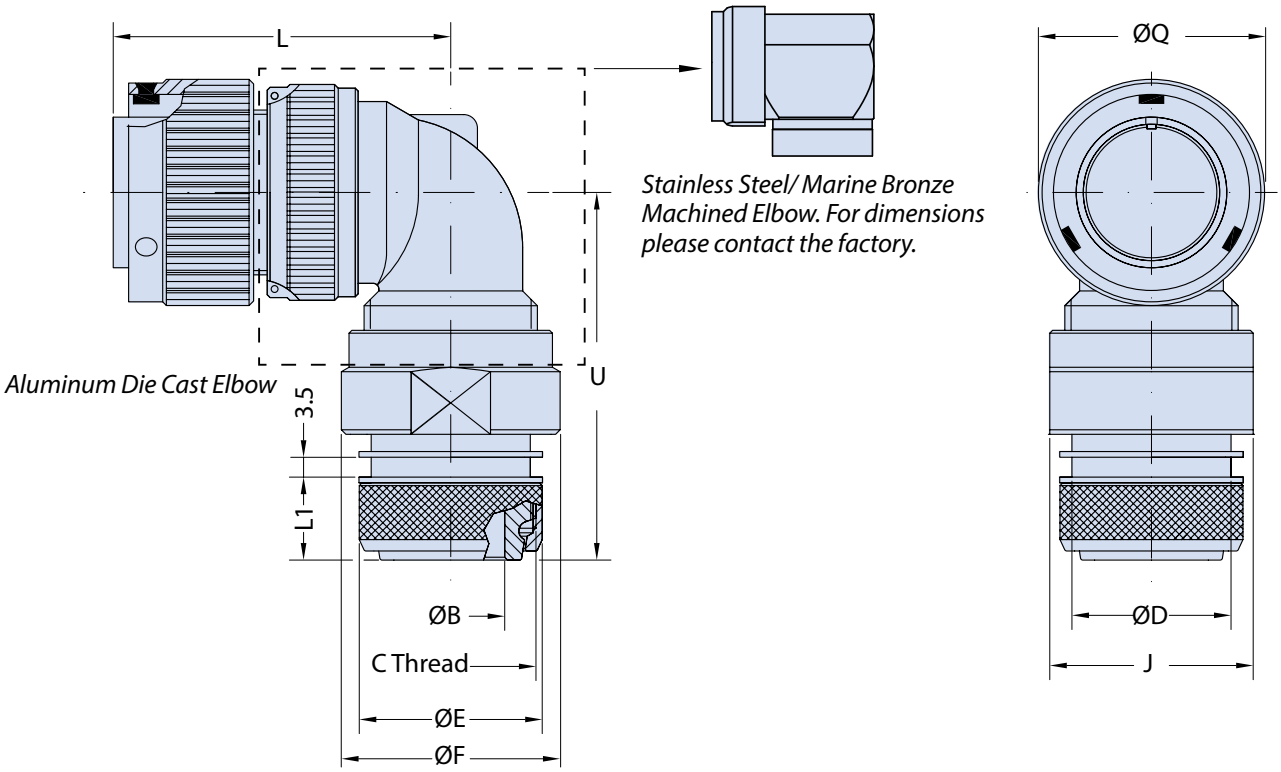

Application Notes

1. 90° plug assembly with EMI/RFI shield termination backshell and rotating coupling nut. Cable shield is terminated with a "braid-trap" nut. Heat-shrink tubing may also be attached for additional environmental sealing.
2. Connector/Backshell Class "SP" (environmental)—Wire sealing grommet supplied.
3. Standard materials configuration consists of aluminum alloy. For platings, see TABLE II finish options.
4. Standard contact material consists of copper alloy with silver plating or gold plating.

© 2015 Glenair, Inc. U.S. CAGE Code 06324 Printed in Italy

Downloaded from Arrow.com.

TABLE I: DIMENSION

Shell Size	ØB min.	C Thread	ØD ±0.1	ØE ±0.2	ØF ±0.2	J Key	L Max.	L1 Max.	ØQ ±0.1	U Max.
10 SL	8.6	M16X1	15.8	18.5	22	20	40	14.0	22.6	55.0
14 S	10.7	M20X1	19.8	22.3	25	23	42	14.0	29.0	57.0
16 S	13.9	M23X1	22.0	25.3	28	26	46	15.6	31.6	60.0
16	13.9	M23X1	22.0	25.3	28	26	55	15.6	31.6	63.0
18	15.0	M26X1	24.5	28.0	30	28	57	14.6	36.2	64.0
20	18.8	M30X1	28.0	32.3	36	34	62	14.6	39.8	66.0
22	22.0	M32X1	30.0	34.3	38	36	62	14.6	43.0	66.0
24	25.0	M36X1	34.0	38.3	43	41	67	14.6	46.4	71.0
28	28.3	M39X1	36.9	41.2	44	42	67	14.6	53.0	80.0
32	34.0	M45X1	43.5	48.3	54	52	72	14.6	60.0	81.0
36	40.5	M52X1	50.0	55.0	61	58	75	15.0	66.2	81.0
40	48.0	M59X1	57.0	62.0	68	65	78	15.5	72.3	86.0

TABLE II: MODIFICATION CODES

CONTACT OPTIONS		
Sym	**Description**	
B0	Connector without Contacts**	
B1	Connector with Gold Plated Contacts	
Omit for standard version (Silver plated)		
STANDARD MATERIAL AND FINISH (*)		
Sym	**Description**	**RoHS**
	Omit for Aluminum/ Cadmium Olive Drab	
F7	Aluminum/ Black Zinc Nickel	✓
F11	Aluminum/ Electroless Nickel	✓
MB	Marine Bronze/ Unplated	✓
FK	Stainless Steel/ Passivate	✓

(*) For further options, please contact the factory.

(**) Crimp Contacts Only

TABLE III

ELASTOMER OPTIONS	
Sym	**Description**
	Omit for Polychloroprene Elastomer
FR	Fire Resistant Elastomer
S	Silicone Elastomer

© 2015 Glenair, Inc.

Downloaded from Arrow.com.

ITS 3108 A ZL and ITS 3108 R ZL
ITS 4108 A ZL and ITS 4108 R ZL
Cylindrical Plug Assembly
with 90° BAND-IT Backshell

Elastomer Option (See Table V)	Grounding Fingers (Omit for Standard)	Contact Type *31* - Solder *41* - Crimp	Shell Size and Insert Arrangement (See Section A)	Contact Gender *P* - Pin *S* - Socket	BAND-IT Backshell *ZLF* - Supplied with Metallic Band	Entry Size (See Table II)

XX	ITS	G	31	08	A	20-27	P	Y	XX	ZL	XX	XXX

Reverse Bayonet Coupling *ITS* - Alumium Shell with Stainless Steel Studs *ITB* - Marine Bronze or Stainless Steel Shell without Stainless Steel Studs For further details, see diagram on page A-38	*08* - 90° Plug Assembly	Connector/Backshell Class *A* - Non-Environmental; Supplied with Backshell Only *R* - Environmental; Supplied with Backshell and Grommet	Alternate Insert Rotation (W, X, Y, Z) Omit for Normal (See Section A)	Contact Options (See Table III)	Finish Options (See Table IV)

B

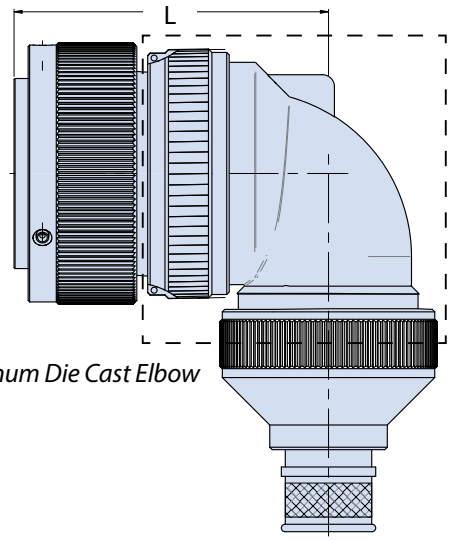

Aluminum Die Cast Elbow

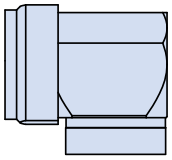

Stainless Steel/ Marine Bronze Machined Elbow. For dimensions please contact the factory.

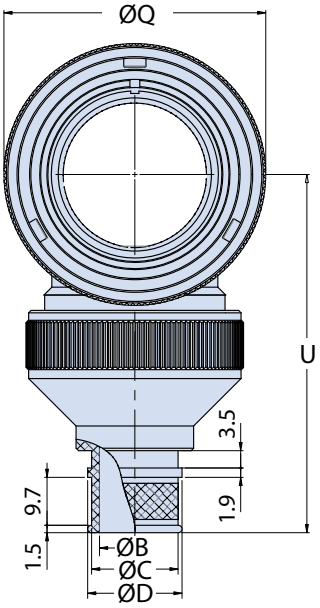

Application Notes

1. Straight cylindrical plug assembly with backshell for attachment of BAND-IT.
2. Connector/Backshell Class "A" (non-environmental)—Not supplied with wire sealing grommet; Class "R" (environmental)—Supplied with grommet.
3. Standard materials configuration consists of aluminum alloy. For platings, see TABLE IV finish options.
4. Standard contact material consists of copper alloy with silver plating or gold plating.

© 2015 Glenair, Inc. U.S. CAGE Code 06324 Printed in Italy

Downloaded from Arrow.com.

ITS 3108 A ZL and ITS 3108 R ZL
ITS 4108 A ZL and ITS 4108 R ZL
Cylindrical Plug Assembly
with 90° BAND-IT Backshell

TABLE I: DIMENSION

Shell size	ØQ ±0.2	L Max.	U Max.	Entry size [a]
10 SL	22.6	40	48	01÷06
14 S	29.0	42	60	03÷08
16 S	31.6	46	60	05÷10
16	31.6	55	60	05÷10
18	36.2	57	55	07÷12
20	39.8	62	57	09÷14
22	43.0	62	70	11÷16
24	46.4	67	83	12÷17
28	53.0	67	73	13÷19
32	60.0	72	74	17÷22
36	66.2	75	81	19÷23
40	72.3	78	86	21÷24

(a) For further entry size, please contact the factory.

TABLE II: ENTRY SIZE TABLE

Entry Size	ØB	ØC	ØD
01	3.2	6.4	7.9
02	4.8	7.9	9.5
03	6.4	9.5	11.1
04	7.9	11.1	12.7
05	9.5	12.7	14.3
06	11.1	14.3	15.8
07	12.7	15.9	17.4
08	14.3	17.5	19.1
09	15.9	19.1	20.6
10	17.5	20.6	22.2
11	19.1	22.2	23.8
12	20.6	23.8	25.4
13	22.2	25.4	27.0
14	23.8	27.0	28.5
15	25.4	28.6	30.1
16	27.0	30.2	31.8
17	28.6	31.8	33.3
18	31.8	34.9	36.5
19	34.9	38.1	39.7
20	38.1	41.3	42.8
21	41.3	44.5	46.0
22	44.5	47.6	49.2
23	47.6	50.8	52.4
24	50.8	54.0	55.5

TABLE III: MODIFICATION CODES

CONTACT OPTIONS	
Sym	**Description**
B0	Connector without Contacts**
B1	Connector with Gold Plated Contacts
Omit for standard version (Silver plated)	

TABLE IV: MODIFICATION CODES

STANDARD MATERIAL AND FINISH (*)		
Sym	**Description**	**RoHS**
	Omit for Aluminum/ Cadmium Olive Drab	
F7	Aluminum/ Black Zinc Nickel	✓
F11	Aluminum/ Electroless Nickel	✓
MB	Marine Bronze/ Unplated	✓
FK	Stainless Steel/ Passivate	✓

TABLE V

ELASTOMER OPTIONS	
Sym	**Description**
	Omit for Polychloroprene Elastomer
FR	Fire Resistant Elastomer
S	Silicone Elastomer

(*) For further options, please contact the factory.
(**) Crimp Contacts Only

© 2015 Glenair, Inc.
U.S. CAGE Code 06324
Printed in Italy

Downloaded from Arrow.com.

ITS 3126 A and ITS 3126 R
ITS 4126 A and ITS 4126 R
Square Flange Panel Mount Plug

Elastomer Option (See Table III)	Grounding Fingers (Omit for Standard)	*26* - Panel Mount Plug	Shell Size and Insert Arrangement (See Section A)	Contact Gender *P* - Pin *S* - Socket	Mod Code Option (See Table II)
XX	G	26	20-27	P	XXX

ITS	31	A	Y
Reverse Bayonet Coupling *ITS* - Alumium Shell with Stainless Steel Studs *ITB* - Marine Bronze or Stainless Steel Shell without Stainless Steel Studs For further details, see diagram on page A-38	Contact Type *31* - Solder *41* - Crimp	Connector/Backshell Class *A* - General Duty *R* - Sealed Insulators	Alternate Insert Rotation (W, X, Y, Z) Omit for Normal (See Section A)

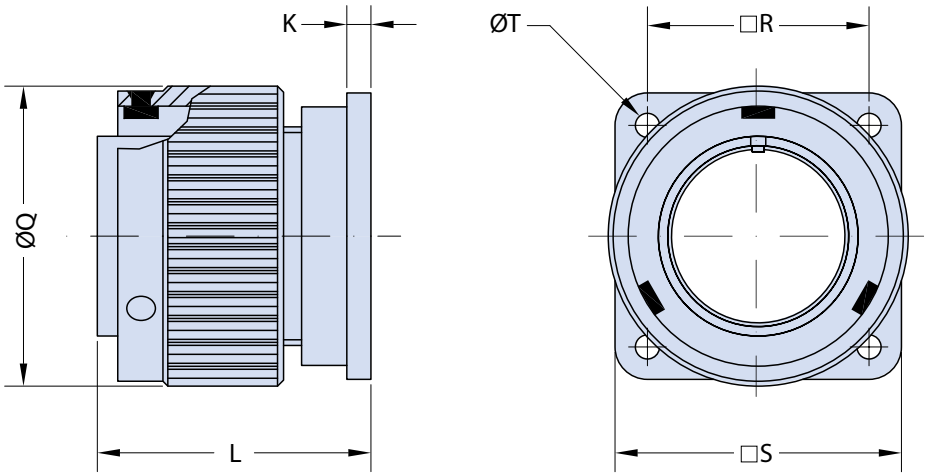

Application Notes

1. Panel mount square flange plug with coupling nut to be mated with ITS 3101 or ITS 4101 in line connectors. Through mounting holes.
2. Connector Class "A" (general duty).
   Connector Class "R" (environmental)—Sealed insulator only with solder contacts.
3. Standard materials configuration consists of aluminum alloy. For platings, see TABLE II finish options.
4. Standard contact material consists of copper alloy with silver plating or gold plating.

© 2015 Glenair, Inc. U.S. CAGE Code 06324 Printed in Italy

Downloaded from Arrow.com.

ITS 3126 A and ITS 3126 R
ITS 4126 A and ITS 4126 R
Square Flange Panel Mount Plug

TABLE I: DIMENSION

Shell Size	K ±0.2	L Max.	ØQ ±0.2	R ±0.2	S ±0.2	ØT +0.1 -0
10 SL	2.8	29.9	22.6	18.25	25.4	3.2
14 S	3.2	29.9	29.0	23.00	30.4	3.2
16 S	3.2	35.1	31.6	24.60	32.5	3.2
16	3.2	35.1	31.6	24.60	32.5	3.2
18	4.0	40.2	36.2	27.00	35.0	3.2
20	4.0	43.8	39.8	29.40	38.0	3.2
22	4.0	43.8	43.0	31.75	41.0	3.2
24	4.0	43.8	46.4	34.90	44.5	3.7
28	4.0	44.0	53.0	39.70	50.9	3.7
32	4.0	45.1	60.0	44.50	57.0	4.3
36	4.0	45.1	66.2	49.20	63.5	4.3
40	4.0	45.1	72.3	55.55	69.9	4.3

TABLE II: MODIFICATION CODES

CONTACT OPTIONS		
Sym	**Description**	
B0	Connector without Contacts**	
B1	Connector with Gold Plated Contacts	
Omit for standard version (Silver plated)		
STANDARD MATERIAL AND FINISH (*)		
Sym	**Description**	**RoHS**
	Omit for Aluminum/ Cadmium Olive Drab	
F6	Aluminum/ Black Electrodeposited Paint	✓
F7	Aluminum/ Black Zinc Nickel	✓
F11	Aluminum/ Electroless Nickel	✓
MB	Marine Bronze/ Unplated	✓
FK	Stainless Steel/ Passivate	✓

(*) For further options, please contact the factory.

(**) Crimp Contacts Only

TABLE III

ELASTOMER OPTIONS	
Sym	**Description**
	Omit for Polychloroprene Elastomer
FR	Fire Resistant Elastomer
S	Silicone Elastomer

© 2015 Glenair, Inc.

Downloaded from Arrow.com.

turboflex®

Ultra flexible and rugged power distribution cables with Glenair Duralectric™ jacketing

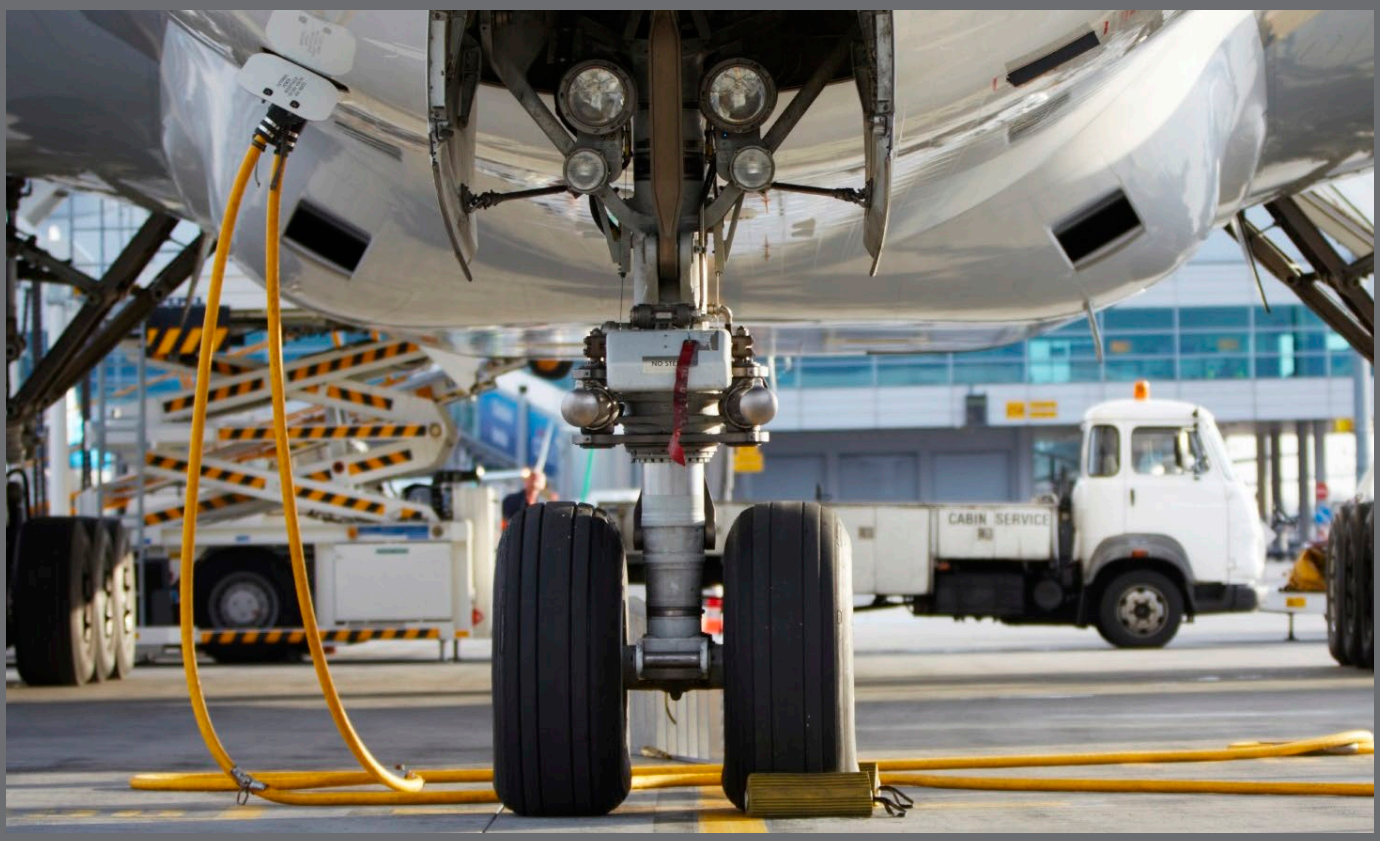

Power distribution cables present a unique challenge to electrical wire interconnect system engineers. Typically fabricated from stiff, non-flexible conductors with extremely large bend radii, such cables are heavy, hard to route, and prone to jacket damage from weathering and abrasion. TurboFlex® power distribution cables are constructed from high strand-count rope lay inner conductors made with tin-, nickel- and silver-plated copper. These highly-flexible conductors, combined with Glenair's high-performance jacketing result in cables ideally suited for applications where flexibility, durability, and weight reduction are required.

Amazingly durable—especially in cold weather—TurboFlex cable is jacketed with Glenair's innovative Duralectric™ insulation compound that provides outstanding resistance to temperature extremes, ozone exposure, caustic chemicals including jet fuel, gamma radiation, and other forms of environmental and mechanical damage. Long life and performance are critical in power distribution applications. TurboFlex, with its flexible conductors and durable jacketing delivers both.

- **Ultra-flexible rope lay power cable construction**
- **Available in a broad range of gages, from 20 AWG to 450 MCM**
- **Jacketed with ruggedized Duralectric™ insulation**
- **Low-smoke, zero halogen, and RoHS compliant**
- **Copper and aluminum conductors available**
- **New lightweight Duralectric™ L**

Ultra-flexible rope lay construction: bend radius is 3X the outer diameter

TurboFlex® with Duralectric™ jacketing ideally suited for equipment grounding

Wide range of available sizes—from 16AWG to 450 MCM

Downloaded from Arrow.com.

GLENAIR POWER CONNECTORS FOR USE WITH **TURBOFLEX®** CABLE

BLQ POWER

Ultra high-performance aerospace and industrial-strength power connectors

Military-grade power distribution connectors. Qualified for harsh-environment aerospace, industrial, nuclear, rail, land, sea, air, and space applications.

IEC IECQ

SMOKE TOXICITY FST FLAME COMPLIANT

RoHS COMPLIANT

HIGH-VOLTAGE AND/OR HIGH-CURRENT SINGLE AND MULTIPOLE POWER CONNECTORS

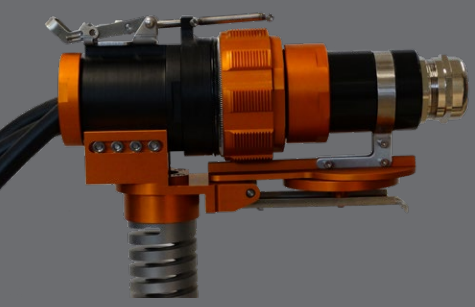

Glenair high-power flex-mount connector with TurboFlex™ cable, locking/lever coupling, and flexible standoff

Series IRT rectangular multipole high-voltage traction motor connectors

UJ Series power joint connector system

PowerLoad™ backup and integrated drive connector for high-current applications

Downloaded from Arrow.com.

Glenair Series ITS-RG
Rubber-Coated 5015 Type Reverse Bayonet Connectors
Product Line Overviewa

PRODUCT FEATURES

- **Fast, Easy Bayonet Coupling: 1/4 Turn**
- **Up to IP67 Rated Outer Shell Rubber Coating**
- **All Shell Styles: Box Mount, Jam-Nut, In-Line, etc.**
- **High Shock and Vibration Resistance**
- **Contact Sizes from #20 to #4/0 in more than 200 Insert Arrangements**
- **Audible and Visual Coupling Indicators**
- **Keyed Polarization**
- **Solder, Crimp, PCB and Thermocouple Terminations**

Rubber-Coated Reverse Bayonet Connector Provides Optimal Mechanical and Environmental Protection

For Harsh Applications

The Glenair Series ITS-RG Connector is a unique rubber coated version of the Series ITS designed for use in harsh environmental applications. The ITS-RG connector offers the same electrical performance as the standard ITS family with better insulation of the connector from high current and voltage. The ruggedized rubber covering prevents infiltrations and guarantees a Protection Index up to IP67. Designed for railway applications, oil-patch applications and other environments where critical interconnects are exposed to the effects of oils, dust, water or other irksome pollutants, the ITS-RG is ready for immediate application with a wide range of standard shell styles, backshells and accessories.

Material Specifications

Rubber Coating: insulating material is in conformity with the most important railway international norms regarding fire resistance, toxicity and smoke including ASTM E162, ASTM e662, NFPA 130 and EN 45545.

Metal Parts: Aluminum alloy.

Contacts: Copper alloy with silver plating (standard) or gold plating (available on request).

Insulating Parts: High insulation synthetic rubber, halogen free, resistant to oils and temperature extremes (-55°C to +125°C).

© 2015 Glenair, Inc. U.S. CAGE Code 06324 Printed in Italy

GLENAIR, INC. • 1211 AIR WAY • GLENDALE, CA 91201-2497 • 818-247-6000 • FAX 818-500-9912
www.glenair.com E-Mail: sales@glenair.com

Downloaded from Arrow.com.

Glenair Series ITS-RG
Reverse Bayonet Connector Assemblies
How to Order • Part Number Breakdown

Connector/Backshell Class

AFS, AGG, RG, RGP, RGBF - *Non-Environmental; No Grommet Supplied*
RGG, RRG, RRGP, RRGBF - *Environmental; Grommet Supplied*

Reverse Bayonet Coupling Connector

Contact Type
31 - *Solder*
41 - *Crimp*

Contact Gender
P - *Pin*
S - *Socket*

Contact Options

Accessory Description Code

Mod Code Option

FR	ITS	G	31	06	RG	20-27	P	Y	XX	N0	XXX

Fire Resistant Inserts
Add "***FR***" to Any Part Number

Grounding Fingers
Available for Plugs Only; Omit for Standard

Shell Size and Insert Arrangement

Alternate Insert Rotation
Omit for Normal

Connector Shell Styles

00 - *Front Panel Mount Square Flange Receptacle with Accessory Threads*
01 - *In-Line Cylindrical Receptacle with Accessory Threads*
02 - *Front Panel Mount Square Flange Receptacle—No Accessory Threads*
030 - *Rear Panel Mount Square Flange Receptacle with Accessory Threads*
06 - *Straight Cylindrical Plug Connector with Accessory Threads*
08 - *Cylindrical Plug Connector with 90° Backshell*

© 2015 Glenair, Inc. U.S. CAGE Code 06324 Printed in Italy

Downloaded from Arrow.com.

ITS 4100 RG and ITS 4100 RRG
Front Panel Mount Square Flange Receptacle
with Rubber-Coated Cable Sealing Backshell

FR	ITS	41	00	RG	20-27	P	Y	XXX
Fire Resistant Rubber Compound	Reverse Bayonet Coupling	Contact Type *41* - Crimp	*00* - Front Wall Mount	Connector/Backshell Class *RG* - Non-Environmental; Supplied with Backshell Only *RRG* -Environmental; Supplied with Wire Sealing Grommet	Shell Size and Insert Arrangement (See Section A)	Contact Gender *P* - Pin *S* - Socket	Alternate Insert Rotation (W, X, Y, Z) Omit for Normal (See Section A)	Mod Code Option (See Table II)

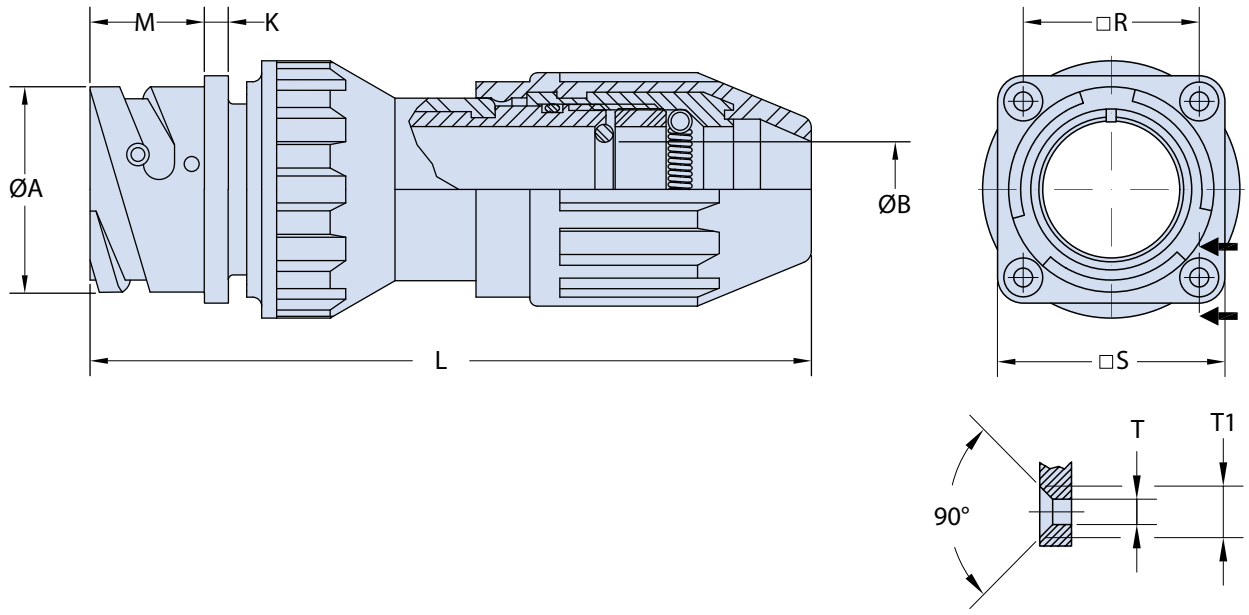

Application Notes

1. Front panel mount square flange receptacle with rubber-coated cable sealing backshell with spring style strain relief for use with jacketed cables. Through mounting holes.
2. RG - Non-Environmental; grommet not supplied.
   RRG - Environmental; supplied with wire sealing grommet.
3. Standard materials configuration consists of aluminum alloy.
4. Standard contact material consists of copper alloy with silver plating or gold plating.

© 2015 Glenair, Inc. U.S. CAGE Code 06324 Printed in Italy

Downloaded from Arrow.com.

ITS 4100 RG and ITS 4100 RRG
Front Panel Mount Square Flange Receptacle
with Rubber-Coated Cable Sealing Backshell

TABLE I: DIMENSIONS

Shell Size	ØA +0.2 -0.1	ØB		K ±0.2	L Max.	M +0.4 -0	R ±0.2	S ±0.2	ØT H13	ØT1
		Min.	Max							
14 S	24.5	9.52	12.70	3.2	90	14.2	23.00	30.4	3.2	6.5
16 S	27.2	12.70	15.90	3.2	90	14.2	24.60	32.5	3.2	6.5
16	27.2	12.70	15.90	3.2	100	19.0	24.60	32.5	3.2	6.5
18	30.7	12.70	15.90	4.0	105	19.0	27.00	35.0	3.2	6.5
20	34.0	15.90	19.00	4.0	110	19.0	29.40	38.0	3.2	6.5
22	37.3	15.90	19.00	4.0	110	19.0	31.75	41.0	3.2	6.5
24	40.9	19.00	22.20	4.0	140	20.6	34.90	44.5	3.7	7.5
28	46.7	22.20	25.40	4.0	140	20.6	39.70	50.9	3.7	7.5
32	53.4	28.50	31.75	4.0	145	22.2	44.50	57.0	4.3	8.0
36	59.6	31.75	34.90	4.0	160	22.2	49.20	63.5	4.3	8.0
40	65.5	38.00	41.27	4.0	165	22.2	55.55	69.9	4.3	8.0

TABLE II: MODIFICATION CODES

CONTACT OPTIONS		
Sym	**Description**	
B0	Connector without Contacts**	
B1	Connector with Gold Plated Contacts	
Omit for standard version (Silver plated)		
STANDARD MATERIAL AND FINISH (*)		
Sym	**Description**	**RoHS**
	Omit for Aluminum/ Cadmium Olive Drab	
F6	Aluminum/ Black Electrodeposited Paint	✓
F7	Aluminum/ Black Zinc Nickel	✓
F11	Aluminum/ Electroless Nickel	✓

(*) Apply to components without rubber covering only.
For further finish options, please contact the factory.

(**) Crimp Contacts Only

© 2015 Glenair, Inc.

Downloaded from Arrow.com.

ITS 4100 RG D1 and ITS 4100 RRG D1
Front Panel Mount Square Flange Receptacle
with Backshell for Termination of UNI4883 Rubber Conduit

FR	ITS	41	00	RG	20-27	P	Y	XX	D12722	XXX
Fire Resistant Rubber Compound	Reverse Bayonet Coupling	Contact Type *41* - Crimp	*00* - Front Wall Mount	Connector/Backshell Class *RG* - Non-Environmental; Supplied with Backshell Only *RRG* -Environmental; Supplied with Wire Sealing Grommet	Shell Size and Insert Arrangement (See Section A)	Contact Gender *P* - Pin *S* - Socket	Alternate Insert Rotation (W, X, Y, Z) Omit for Normal (See Section A)	Contact Options (See Table IV)	UNI4883 Backshell Adapter Shell Size Designator (See Table II)	Mod Code Option (See Table III)

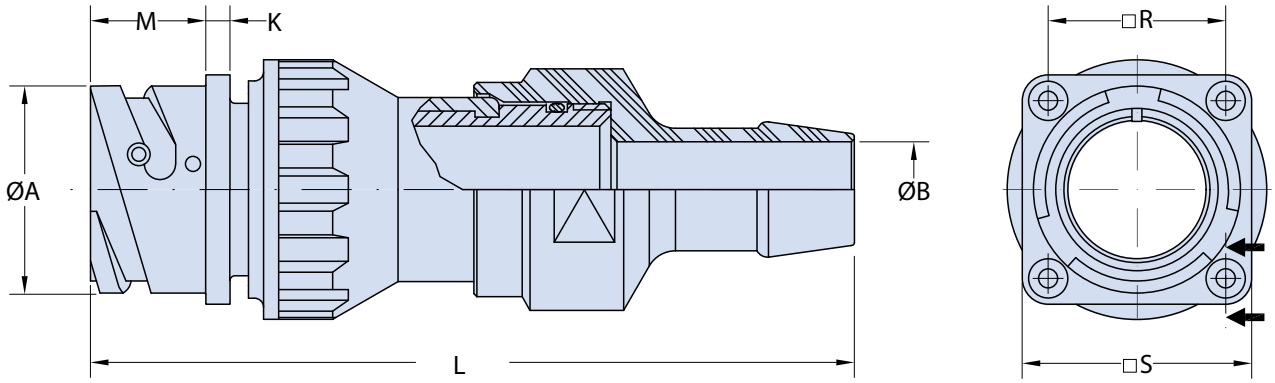

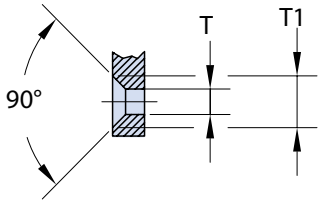

Application Notes

1. Front panel mount square flange receptacle with rear backshell for termination of UNI41883 type rubber conduit. Through mounting holes.
2. RG - Non-Environmental; grommet not supplied.
   RRG - Environmental; supplied with wire sealing grommet.
3. Standard materials configuration consists of aluminum alloy.
4. Standard contact material consists of copper alloy with silver plating or gold plating.

© 2015 Glenair, Inc. U.S. CAGE Code 06324 Printed in Italy

Downloaded from Arrow.com.

ITS 4100 RG D1 and ITS 4100 RRG D1
Front Panel Mount Square Flange Receptacle
with Backshell for Termination of UNI4883 Rubber Conduit

Glenair®

TABLE I: DIMENSIONS

Shell Size	ØA +0.2 -0.1	ØB	K ±0.2	L Max.	M +0.4 -0	R ±0.2	S ±0.2	ØT H13	ØT1
14 S	24.5	See Table III Below	3.2	107	14.2	23.00	30.4	3.2	6.5
16 S	27.2		3.2	115	14.2	24.60	32.5	3.2	6.5
16	27.2		3.2	115	19.0	24.60	32.5	3.2	6.5
18	30.7		4.0	122	19.0	27.00	35.0	3.2	6.5
20	34.0		4.0	131	19.0	29.40	38.0	3.2	6.5
22	37.3		4.0	131	19.0	31.75	41.0	3.2	6.5
24	40.9		4.0	153	20.6	34.90	44.5	3.7	7.5
28	46.7		4.0	153	20.6	39.70	50.9	3.7	7.5
32	53.4		4.0	146	22.2	44.50	57.0	4.3	8.0
36	59.6		4.0	164	22.2	49.20	63.5	4.3	8.0
40	65.5		4.0	169	22.2	55.55	69.9	4.3	8.0

TABLE II: BACKSHELL DIMENSIONS RUBBER CONDUIT

Shell Size	In accordance with UNI 4883		ØB ±0.1
	Ø Min.	Ø Max.	
14 S	12.0	17.0	11.0
18	15.0	20.0	13.3
20 - 22	12.0	17.0	11.0
20 - 22	18.0	23.0	15.8
20 - 22	22.0	27.0	20.0
20 - 22	25.0	30.0	22.0
20 - 22	35.0	40.0	32.0
24 - 28	20.0	25.0	15.0
24 - 28	22.0	27.0	20.0
24 - 28	25.0	30.0	22.0
24 - 28	28.0	33.0	26.0
24 - 28	30.0	35.0	25.0
24 - 28	35.0	40.0	32.0
24 - 28	45.0	50.0	42.0
32	25.0	30.0	22.0
32	30.0	35.0	25.0
32	35.0	40.0	32.0
32	40.0	45.0	38.0
36	30.0	35.0	25.0
36	35.0	40.0	32.0
40	40.0	45.0	38.0
40	45.0	50.0	42.0
40	50.0	55.0	47.0

TABLE III: MODIFICATION CODES

STANDARD MATERIAL AND FINISH (*)		
Sym	**Description**	**RoHS**
	Omit for Aluminum/ Cadmium Olive Drab	
F6	Aluminum/ Black Electrodeposited Paint	✓
F7	Aluminum/ Black Zinc Nickel	✓
F11	Aluminum/ Electroless Nickel	✓

TABLE IV: MODIFICATION CODES

CONTACT OPTIONS	
Sym	**Description**
B0	Connector without Contacts**
B1	Connector with Gold Plated Contacts
Omit for standard version (Silver plated)	

(*) Apply to components without rubber covering only. For further finish options, please contact the factory.

(**) Crimp Contacts Only

© 2015 Glenair, Inc. U.S. CAGE Code 06324 Printed in Italy

Downloaded from Arrow.com.

ITS 4101 RG and ITS 4101 RRG
Cylindrical In-Line Receptacle Assembly
with Rubber-Coated Cable Sealing Backshell

FR	ITS	41	01	RG	20-27	P	Y	XXX
Fire Resistant Rubber Compound	Reverse Bayonet Coupling	Contact Type *41* - Crimp	*01* - In-Line Receptacle Assembly	Connector/Backshell Class *RG* - Non-Environmental; Supplied with Backshell Only *RRG* -Environmental; Supplied with Wire Sealing Grommet	Shell Size and Insert Arrangement (See Section A)	Contact Gender *P* - Pin *S* - Socket	Alternate Insert Rotation (W, X, Y, Z) Omit for Normal (See Section A)	Mod Code Option (See Table II)

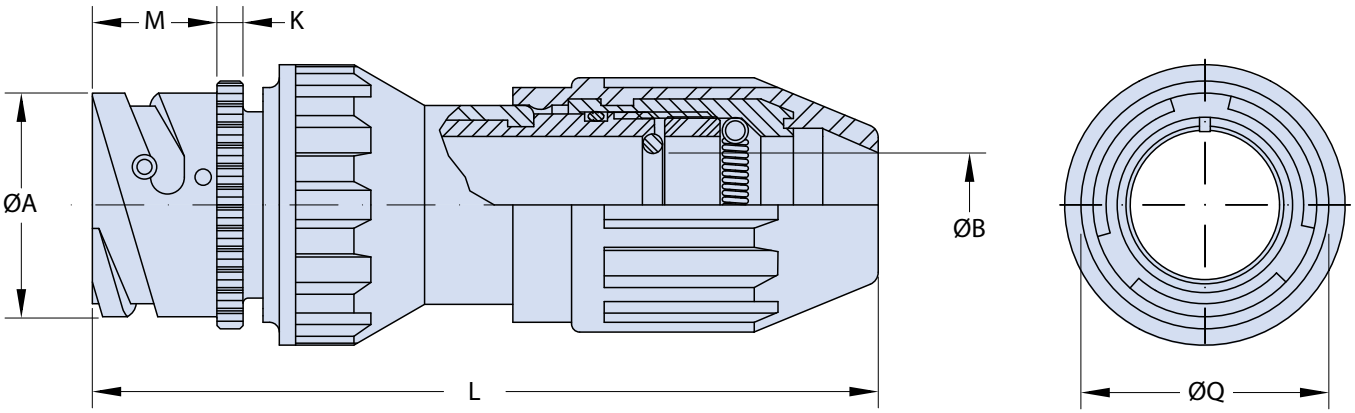

Application Notes

1. Cylindrical in-line receptacle assembly with rubber-coated cable sealing backshell with spring style strain relief for use with jacketed cables.
2. RG - Non-Environmental; grommet not supplied.
   RRG - Environmental; supplied with wire sealing grommet.
3. Standard materials configuration consists of aluminum alloy.
4. Standard contact material consists of copper alloy with silver plating or gold plating.

© 2015 Glenair, Inc. U.S. CAGE Code 06324 Printed in Italy

Downloaded from Arrow.com.

ITS 4101 RG and ITS 4101 RRG
Cylindrical In-Line Receptacle Assembly
with Rubber-Coated Cable Sealing Backshell

TABLE I: DIMENSIONS

Shell Size	ØA +0.2 -0.1	ØB		K ±0.2	L Max.	M +0.4 -0	ØQ ±0.1
		Min.	Max.				
14 S	24.5	9.52	12.70	3.2	90	14.2	28.8
16 S	27.2	12.70	15.90	3.2	90	14.2	30.5
16	27.2	12.70	15.90	3.2	100	19.0	30.5
18	30.7	12.70	15.90	4.0	105	19.0	33.8
20	34.0	15.90	19.00	4.0	110	19.0	36.9
22	37.3	15.90	19.00	4.0	110	19.0	39.5
24	40.9	19.00	22.20	4.0	140	20.6	43.9
28	46.7	22.20	25.40	4.0	140	20.6	48.4
32	53.4	28.50	31.75	4.0	145	22.2	56.0
36	59.6	31.75	34.90	4.0	160	22.2	62.4
40	65.5	38.00	41.27	4.0	165	22.2	68.6

TABLE II: MODIFICATION CODES

CONTACT OPTIONS		
Sym	**Description**	
B0	Connector without Contacts**	
B1	Connector with Gold Plated Contacts	
Omit for standard version (Silver plated)		
STANDARD MATERIAL AND FINISH (*)		
Sym	**Description**	**RoHS**
	Omit for Aluminum/ Cadmium Olive Drab	
F6	Aluminum/ Black Electrodeposited Paint	✓
F7	Aluminum/ Black Zinc Nickel	✓
F11	Aluminum/ Electroless Nickel	✓

(*) Apply to components without rubber covering only.
For further finish options, please contact the factory.

(**) Crimp Contacts Only

© 2015 Glenair, Inc.

Downloaded from Arrow.com.

ITS 4101 RG D1 and ITS 4101 RRG D1
Cylindrical In-Line Receptacle Assembly
with Rubber-Coated Backshell
for Termination of UNI4883 Rubber Conduit

FR	ITS	41	01	RG	20-27	P	Y	XX	D12722	XXX
Fire Resistant Rubber Compound	Reverse Bayonet Coupling	Contact Type *41* - Crimp	*01* - In-Line Receptacle Assembly	Connector/Backshell Class *RG* - Non-Environmental; Supplied with Backshell Only *RRG* -Environmental; Supplied with Wire Sealing Grommet	Shell Size and Insert Arrangement (See Section A)	Contact Gender *P* - Pin *S* - Socket	Alternate Insert Rotation (W, X, Y, Z) Omit for Normal (See Section A)	Contact Options (See Table IV)	UNI4883 Backshell Adapter Shell Size Designator (See Table II)	Mod Code Option (See Table III)

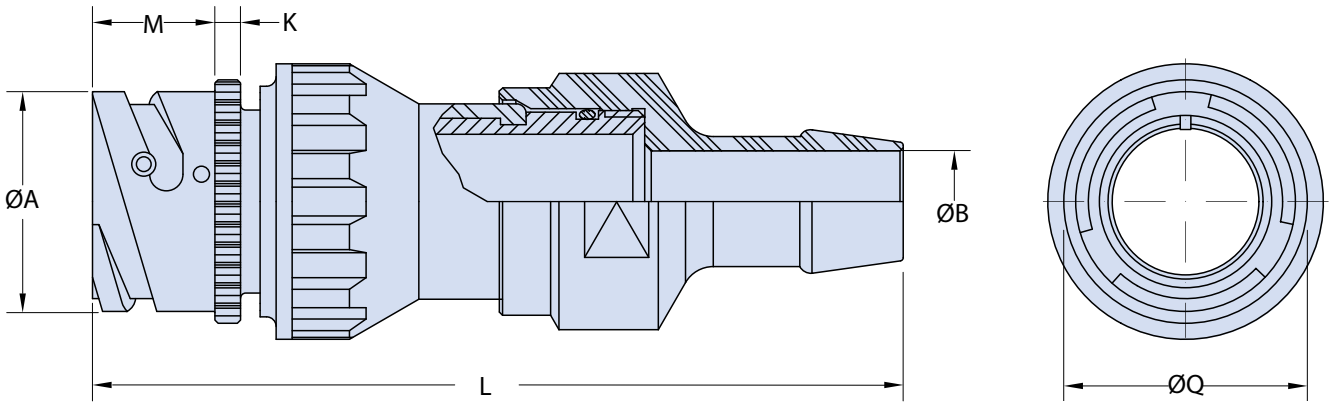

Application Notes

1. In-line receptacle assembly with rear backshell for termination of UNI41883 type rubber conduit.
2. RG - Non-Environmental; grommet not supplied.
   RRG - Environmental; supplied with wire sealing grommet.
3. Standard materials configuration consists of aluminum alloy.
4. Standard contact material consists of copper alloy with silver plating or gold plating.

© 2015 Glenair, Inc. U.S. CAGE Code 06324 Printed in Italy

Downloaded from Arrow.com.

ITS 4101 RG D1 and ITS 4101 RRG D1
Cylindrical In-Line Receptacle Assembly
with Rubber-Coated Backshell
for Termination of UNI4883 Rubber Conduit

Glenair®

TABLE I: DIMENSIONS

Shell Size	ØA +0.2 -0.1	ØB	K ±0.2	L Max.	M +0.4 -0	ØQ ±0.1
14 S	24.5	See Table III Below	3.2	107	14.2	28.8
16 S	27.2		3.2	115	14.2	30.5
16	27.2		3.2	115	19.0	30.5
18	30.7		4.0	122	19.0	33.8
20	34.0		4.0	131	19.0	36.9
22	37.3		4.0	131	19.0	39.5
24	40.9		4.0	153	20.6	43.9
28	46.7		4.0	153	20.6	48.4
32	53.4		4.0	146	22.2	56.0
36	59.6		4.0	164	22.2	62.4
40	65.5		4.0	169	22.2	68.6

TABLE II: BACKSHELL DIMENSIONS RUBBER CONDUIT

Shell Size	In accordance with UNI 4883		ØB ±0.1
	Ø Min.	Ø Max.	
14 S	12.0	17.0	11.0
18	15.0	20.0	13.3
20 - 22	12.0	17.0	11.0
20 - 22	18.0	23.0	15.8
20 - 22	22.0	27.0	20.0
20 - 22	25.0	30.0	22.0
20 - 22	35.0	40.0	32.0
24 - 28	20.0	25.0	15.0
24 - 28	22.0	27.0	20.0
24 - 28	25.0	30.0	22.0
24 - 28	28.0	33.0	26.0
24 - 28	30.0	35.0	25.0
24 - 28	35.0	40.0	32.0
24 - 28	45.0	50.0	42.0
32	25.0	30.0	22.0
32	30.0	35.0	25.0
32	35.0	40.0	32.0
32	40.0	45.0	38.0
36	30.0	35.0	25.0
36	35.0	40.0	32.0
40	40.0	45.0	38.0
40	45.0	50.0	42.0
40	50.0	55.0	47.0

TABLE III: MODIFICATION CODES

STANDARD MATERIAL AND FINISH (*)		
Sym	**Description**	**RoHS**
	Omit for Aluminum/ Cadmium Olive Drab	
F6	Aluminum/ Black Electrodeposited Paint	✓
F7	Aluminum/ Black Zinc Nickel	✓
F11	Aluminum/ Electroless Nickel	✓

TABLE IV: MODIFICATION CODES

CONTACT OPTIONS	
Sym	**Description**
B0	Connector without Contacts**
B1	Connector with Gold Plated Contacts
Omit for standard version (Silver plated)	

(*) Apply to components without rubber covering only. For further finish options, please contact the factory.

(**) Crimp Contacts Only

© 2015 Glenair, Inc. U.S. CAGE Code 06324 Printed in Italy

Downloaded from Arrow.com.

ITS 4102 AFS
Front Panel Mount Square Flange Receptacle
No Accessory Threads

FR	ITS	41	02	AFS	20-27	P	Y	XXX
Fire Resistant Rubber Compound	Reverse Bayonet Coupling	Contact Type *41* - Crimp	*02* - Front Box Mount	Connector Class *AFS* - General Duty Chamfered mounting holes *RFS* - Sealed Insulator Chamfered mounting holes	Shell Size and Insert Arrangement (See Section A)	Contact Gender *P* - Pin *S* - Socket	Alternate Insert Rotation (W, X, Y, Z) Omit for Normal (See Section A)	Mod Code Option (See Table III)

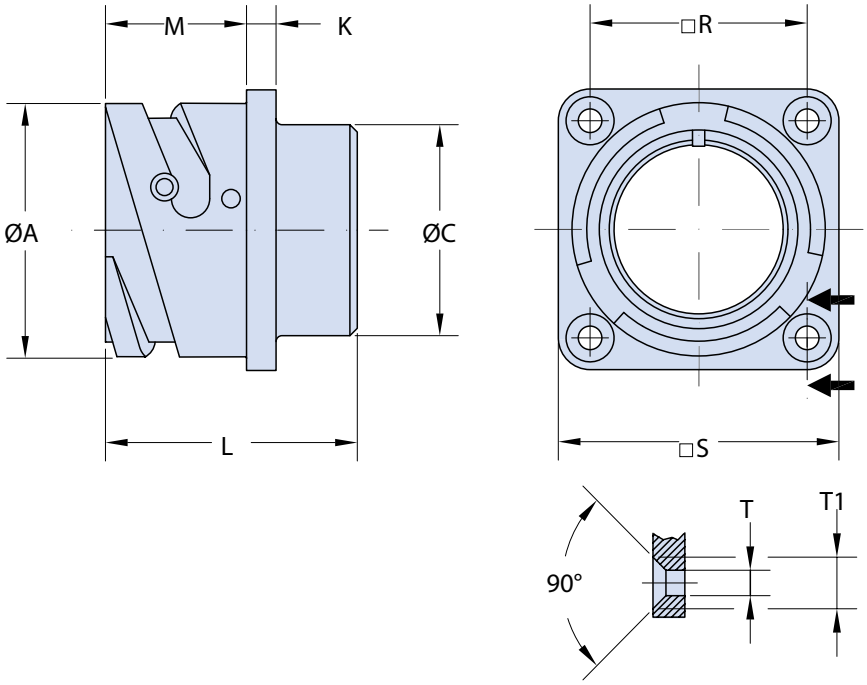

Application Notes

1. Front panel mount square flange receptacle—No accessory threads. Chamfered mounting holes.
2. Connector class:
   AFS - General Duty. Chamfered mounting holes.
   RFS - Sealed Insulator only with solder contacts. Chamfered mounting holes.
3. Standard materials configuration consists of aluminum alloy.
4. Standard contact material consists of copper alloy with silver plating or gold plating.

© 2015 Glenair, Inc. U.S. CAGE Code 06324 Printed in Italy

Downloaded from Arrow.com.

ITS 4102 AFS
Front Panel Mount Square Flange Receptacle
No Accessory Threads

TABLE I: DIMENSIONS

Shell Size	ØA +0.2 -0.1	ØC Max.	K ±0.2	L ±0.3	M +0.4 -0	R ±0.2	S ±0.2	ØT H13	ØT1
14 S	24.5	19.2	3.2	24.9	14.2	23.00	30.4	3.2	6.5
16 S	27.2	22.4	3.2	24.9	14.2	24.60	32.5	3.2	6.5
16	27.2	22.4	3.2	33.9	19.0	24.60	32.5	3.2	6.5
18	30.7	25.6	4.0	34.3	19.0	27.00	35.0	3.2	6.5
20	34.0	29.0	4.0	34.3	19.0	29.40	38.0	3.2	6.5
22	37.3	32.2	4.0	34.3	19.0	31.75	41.0	3.2	6.5
24	40.9	35.3	4.0	35.8	20.6	34.90	44.5	3.7	7.5
28	46.7	41.4	4.0	35.8	20.6	39.70	50.9	3.7	7.5
32	53.4	47.8	4.0	37.4	22.2	44.50	57.0	4.3	8.0
36	59.6	54.1	4.0	37.4	22.2	49.20	63.5	4.3	8.0
40	65.5	59.0	4.0	37.4	22.2	55.55	69.9	4.3	8.0

TABLE II: MODIFICATION CODES

CONTACT OPTIONS		
Sym	**Description**	
B0	Connector without Contacts**	
B1	Connector with Gold Plated Contacts	
Omit for standard version (Silver plated)		
STANDARD MATERIAL AND FINISH (*)		
Sym	**Description**	**RoHS**
	Omit for Aluminum/ Cadmium Olive Drab	
F6	Aluminum/ Black Electrodeposited Paint	✓
F7	Aluminum/ Black Zinc Nickel	✓
F11	Aluminum/ Electroless Nickel	✓

(*) Apply to components without rubber covering only.
For further finish options, please contact the factory.

(**) Crimp Contacts Only

© 2015 Glenair, Inc.

Downloaded from Arrow.com.

ITS 41030 RG and ITS 41030 RRG
Rear Panel Mount Square Flange Receptacle
with Rubber-Coated Cable Sealing Backshell

FR	ITS	41	030	RG	FP	20-27	P	Y	XXX
Fire Resistant Rubber Compound	Reverse Bayonet Coupling	Contact Type *41* - Crimp	*030* - Rear Wall Mount	Connector/Backshell Class *RG* - Non-Environmental; Supplied with Backshell Only *RRG* -Environmental; Supplied with Wire Sealing Grommet	Mounting Holes *FP* - Non-Threaded Through Mounting Holes *OMIT* - For Standard (Threaded) Mounting Holes	Shell Size and Insert Arrangement (See Section A)	Contact Gender *P* - Pin *S* - Socket	Alternate Insert Rotation (W, X, Y, Z) Omit for Normal (See Section A)	Mod Code Option (See Table II)

C

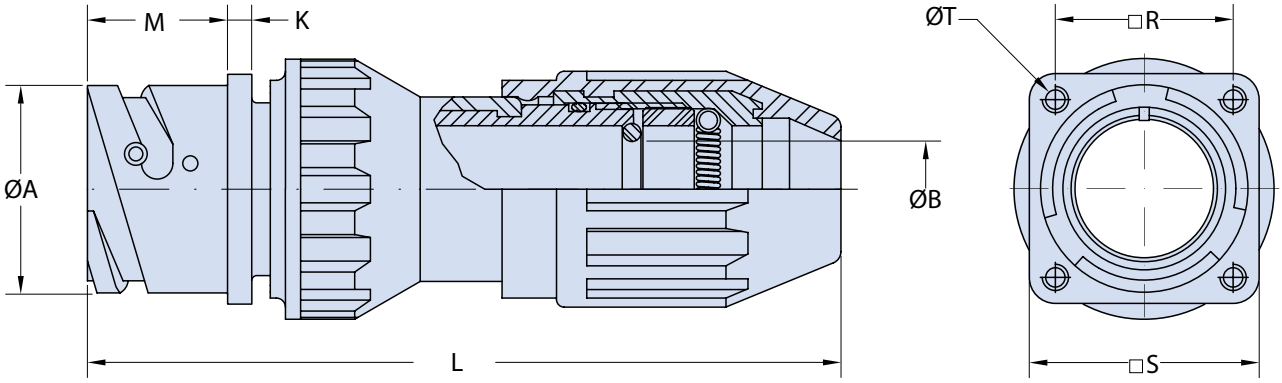

Application Notes

1. Rear panel mount square flange receptacle assembly with rubber-coated cable sealing backshell with spring style strain relief for use with jacketed cables.
   Threaded mounting holes. Optional non-threaded mounting holes available.
2. RG - Non-Environmental; grommet not supplied.
   RRG - Environmental; supplied with wire sealing grommet.
3. Standard materials configuration consists of aluminum alloy.
4. Standard contact material consists of copper alloy with silver plating or gold plating.

© 2015 Glenair, Inc. U.S. CAGE Code 06324 Printed in Italy

Downloaded from Arrow.com.

ITS 41030 RG and ITS 41030 RRG
Rear Panel Mount Square Flange Receptacle
with Rubber-Coated Cable Sealing Backshell

TABLE I: DIMENSIONS

Shell Size	ØA +0.2 -0.1	ØB		K ±0.2	L Max.	M +0.2 -0	R ±0.2	S ±0.2	T Thread
		Min.	Max.						
14 S	24.5	9.52	12.70	3.2	95	18.4	23.00	30.4	M4
16 S	27.2	12.70	15.90	3.2	95	18.4	24.60	32.5	M4
16	27.2	12.70	15.90	3.2	105	23.2	24.60	32.5	M4
18	30.7	12.70	15.90	4.0	107	23.2	27.00	35.0	M4
20	34.0	15.90	19.00	4.0	114	23.2	29.40	38.0	M4
22	37.3	15.90	19.00	4.0	114	23.2	31.75	41.0	M4
24	40.9	19.00	22.20	4.0	142	23.2	34.90	44.5	M4
28	46.7	22.20	25.40	4.0	144	24.2	39.70	50.9	M5
32	53.4	28.50	31.75	4.0	147	24.2	44.50	57.0	M5
36	59.6	31.75	34.90	4.0	162	24.2	49.20	63.5	M5
40	65.5	38.00	41.27	4.0	167	24.2	55.55	69.9	M5

TABLE II: MODIFICATION CODES

CONTACT OPTIONS		
Sym	**Description**	
B0	Connector without Contacts**	
B1	Connector with Gold Plated Contacts	
Omit for standard version (Silver plated)		
STANDARD MATERIAL AND FINISH (*)		
Sym	**Description**	**RoHS**
	Omit for Aluminum/ Cadmium Olive Drab	
F6	Aluminum/ Black Electrodeposited Paint	✓
F7	Aluminum/ Black Zinc Nickel	✓
F11	Aluminum/ Electroless Nickel	✓

(*) Apply to components without rubber covering only.
For further finish options, please contact the factory.

(**) Crimp Contacts Only

© 2015 Glenair, Inc.

Downloaded from Arrow.com.

ITS 4106 AGG and ITS 4106 RGG
Straight Plug Connector with Rubber-Coated Coupling Nut

FR	ITS	G	41	06	AGG	20-27	P	Y	XXX
Fire Resistant Rubber Compound	Reverse Bayonet Coupling	Grounding Fingers (Omit for Standard)	Contact Type *41* - Crimp Contacts	*06* -Straight Plug Connector	Connector/Backshell Class *AGG* - Non-Environmental *RGG* - Environmental; Supplied with Grommet	Shell Size and Insert Arrangement (See Section A)	Contact Gender *P* - Pin *S* - Socket	Alternate Insert Rotation (W, X, Y, Z) Omit for Normal (See Section A)	Mod Code Option (See Table II)

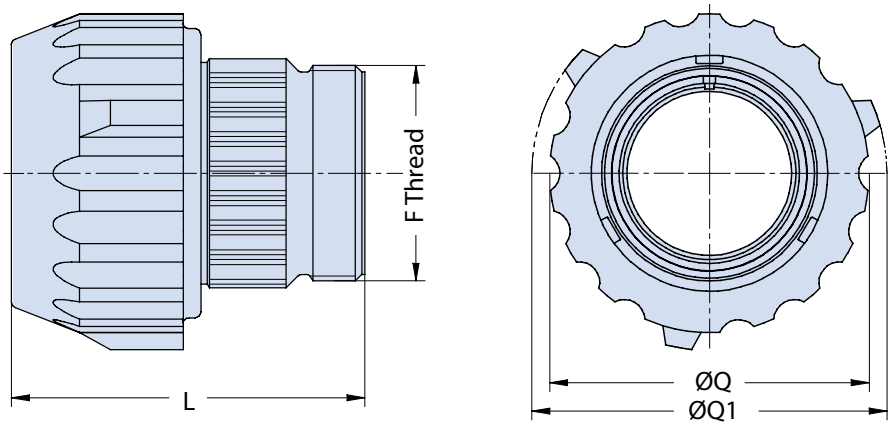

Application Notes

1. Straight plug connector with rubber covered coupling nut.
2. Connector/Backshell class "AGG" (no grommet supplied) or "RGG" (insulating grommet supplied).
3. Standard materials configuration consists of aluminum alloy.
4. Standard contact material consists of copper alloy with silver plating or gold plating.
5. A broad range of additional connector accessories are available.
   See our website and/or contact the factory for complete information.
6. Order cable clamps separately.

© 2015 Glenair, Inc. U.S. CAGE Code 06324 Printed in Italy

Downloaded from Arrow.com.

ITS 4106 AGG and ITS 4106 RGG Straight Plug Connector with Rubber-Coated Coupling Nut

TABLE I: DIMENSIONS

Shell Size	L Max.	ØQ ±0.5	ØQ1 ±0.5	F Thread
10 SL	46.0	28.6	33.5	0.6250 - 24UNEF
14 S	48.4	35.0	42.0	0.7500 - 20UNEF
16 S	48.4	38.0	45.0	0.8750 - 20UNEF
16	59.8	38.0	45.0	0.8750 - 20UNEF
18	59.8	43.5	49.0	1.0000 - 20UNEF
20	60.1	46.5	52.0	1.1875 - 18UNEF
22	60.1	50.5	56.0	1.1875 - 18UNEF
24	61.7	54.0	60.0	1.4375 - 18UNEF
28	68.2	61.0	67.0	1.4375 - 18UNEF
32	73.3	68.0	76.0	1.7500 - 18UNS
36	78.8	74.0	82.0	2.0000 - 18UNS
40	78.8	80.0	88.0	2.2500 - 16UN

TABLE II: MODIFICATION CODES

CONTACT OPTIONS		
Sym	**Description**	
B0	Connector without Contacts**	
B1	Connector with Gold Plated Contacts	
Omit for standard version (Silver plated)		
STANDARD MATERIAL AND FINISH (*)		
Sym	**Description**	**RoHS**
	Omit for Aluminum/ Cadmium Olive Drab	
F6	Aluminum/ Black Electrodeposited Paint	✓
F7	Aluminum/ Black Zinc Nickel	✓
F11	Aluminum/ Electroless Nickel	✓

(*) Apply to components without rubber covering only.
For further finish options, please contact the factory.

(**) Crimp Contacts Only

© 2015 Glenair, Inc.

Downloaded from Arrow.com.

ITS 4106 RG and ITS 4106 RRG
Straight Cylindrical Plug Connector
with Rubber-Coated Cable Sealing Backshell

FR	ITS	G	41	06	RG	20-27	P	Y	XX
Fire Resistant Rubber Compound	Reverse Bayonet Coupling	Grounding Fingers (Omit for Standard)	Contact Type *41* - Crimp Contacts	*06* -Straight Plug Connector	Connector/Backshell Class *RG* - Non-Environmental; Supplied with Backshell Only *RRG* -Environmental; Supplied with Wire Sealing Grommet	Shell Size and Insert Arrangement (See Section A)	Contact Gender *P* - Pin *S* - Socket	Alternate Insert Rotation (W, X, Y, Z) Omit for Normal (See Section A)	Mod Code Option (See Table II)

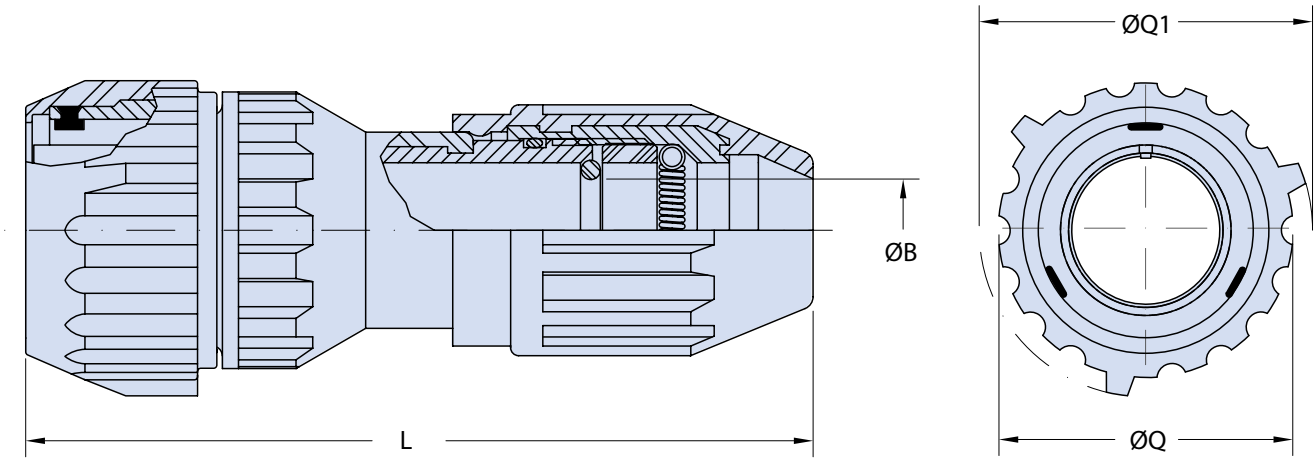

Application Notes

1. Straight plug connector with rubber-coated cable sealing backshell with spring style strain relief for use with jacketed cables.
2. RG - Non-Environmental; grommet not supplied.
   RRG - Environmental; supplied with wire sealing grommet.
3. Standard materials configuration consists of aluminum alloy with plating RoHS compliant.
4. Standard contact material consists of copper alloy with silver plating or gold plating.

© 2015 Glenair, Inc. U.S. CAGE Code 06324 Printed in Italy

Downloaded from Arrow.com.

TABLE I: DIMENSIONS

Shell Size	ØB		L	ØQ	ØQ1
	Min.	Max.	Max.	±0.5	±0.5
14 S	9.52	12.70	95	35.0	42.0
16 S	12.70	15.90	95	38.0	45.0
16	12.70	15.90	105	38.0	45.0
18	12.70	15.90	110	43.5	49.0
20	15.90	19.00	115	46.5	52.0
22	15.90	19.00	115	50.5	56.0
24	19.00	22.20	145	54.0	60.0
28	22.20	25.40	145	61.0	67.0
32	28.50	31.75	150	68.0	76.0
36	31.75	34.90	165	74.0	82.0
40	38.00	41.27	170	80.0	88.0

TABLE II: MODIFICATION CODES

CONTACT OPTIONS	
Sym	**Description**
B0	Connector without Contacts*
B1	Connector with Gold Plated Contacts
Omit for standard version (Silver plated)	

(*) Crimp Contacts Only

© 2015 Glenair, Inc.

Downloaded from Arrow.com.

ITS 4106 RGP and ITS 4106 RRGP
Straight Cylindrical Plug Connector
with Rubber-Coated Cable Sealing Backshell for Use with 03 and 030 Receptacle

FR	ITS	G	41	06	RGP	20-27	P	Y	XX
Fire Resistant Rubber Compound	Reverse Bayonet Coupling	Grounding Fingers (Omit for Standard)	Contact Type *41* - Crimp Contacts	*06* -Straight Plug Connector	Connector/Backshell Class *RGP* - Non-Environmental; Supplied with Backshell Only *RRGP* -Environmental; Supplied with Wire Sealing Grommet	Shell Size and Insert Arrangement (See Section A)	Contact Gender *P* - Pin *S* - Socket	Alternate Insert Rotation (W, X, Y, Z) Omit for Normal (See Section A)	Mod Code Option (See Table II)

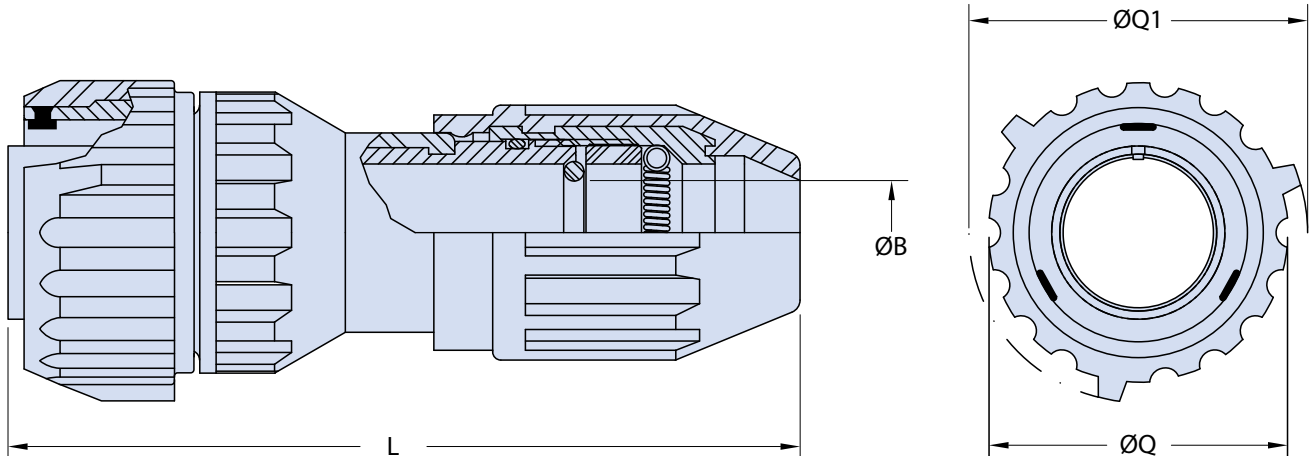

Application Notes

1. Straight plug connector with rubber-coated cable sealing backshell with spring style strain relief for use with jacketed cables. Designed for use with 03 and 030 receptacles.
2. RGP - Non-Environmental; grommet not supplied.
   RRGP - Environmental; supplied with wire sealing grommet.
3. Standard materials configuration consists of aluminum alloy with plating RoHS compliant.
4. Standard contact material consists of copper alloy with silver plating or gold plating.

© 2015 Glenair, Inc. U.S. CAGE Code 06324 Printed in Italy

Downloaded from Arrow.com.

TABLE I: DIMENSIONS

Shell Size	ØB		L Max.	ØQ ±0.5	ØQ1 ±0.5
	Min.	Max.			
14 S	9.52	12.70	90	35.0	42.0
16 S	12.70	15.90	90	38.0	45.0
16	12.70	15.90	100	38.0	45.0
18	12.70	15.90	105	43,5	49.0
20	15.90	19.00	110	46.5	52.0
22	15.90	19.00	110	50.5	56.0
24	19.00	22.20	140	54.0	60.0
28	22.20	25.40	140	61.0	67.0
32	28.50	31.75	145	68.0	76.0
36	31.75	34.90	160	74.0	82.0
40	38.00	41.27	165	80.0	88.0

TABLE II: MODIFICATION CODES

CONTACT OPTIONS	
Sym	**Description**
B0	Connector without Contacts*
B1	Connector with Gold Plated Contacts
Omit for standard version (Silver plated)	

(*) Crimp Contacts Only

© 2015 Glenair, Inc.

Downloaded from Arrow.com.

ITS 4106 RGBF and ITS 4106 RRGBF
Straight Cylindrical Plug Connector
with Rubber-Coated Threaded Adapter for Use with UNI4883 Conduit

FR	ITS	G	41	06	RGBF	20-27	P	Y	XX	2924
Fire Resistant Rubber Compound	Reverse Bayonet Coupling	Grounding Fingers (Omit for Standard)	Contact Type *41* - Crimp Contacts	*06* -Straight Plug Connector	Connector/Backshell Class *RGBF* - Non-Environ mental; Supplied with Backshell Only *RRGBF* - Environmental; Supplied with Wire Sealing Grommet	Shell Size and Insert Arrangement (See Section A)	Contact Gender *P* - Pin *S* - Socket	Alternate Insert Rotation (W, X, Y, Z) Omit for Normal (See Section A)	Contact Options (See Table II)	UNI4883 Conduit Dimension

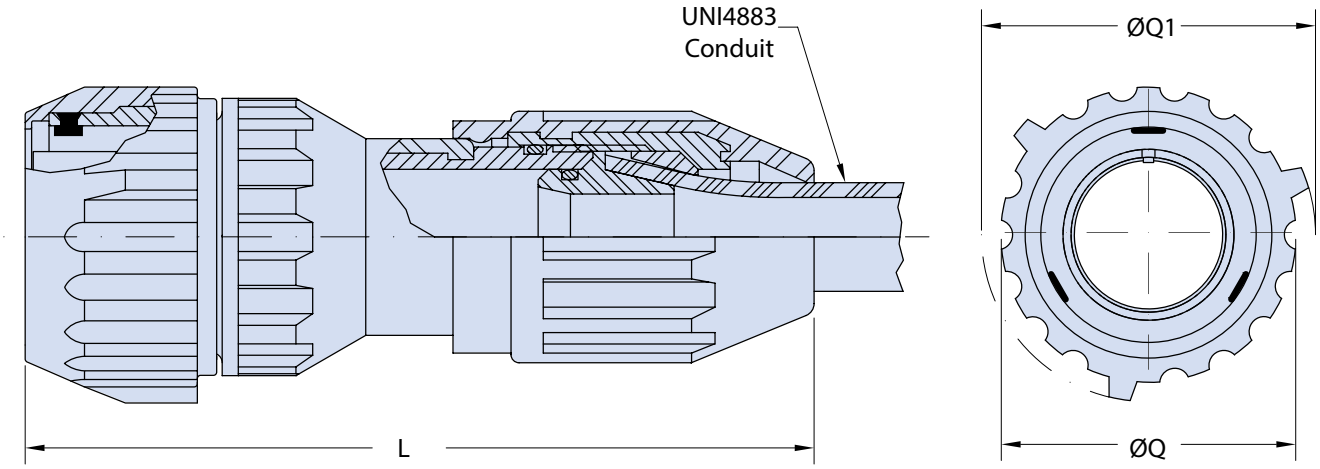

Application Notes

1. Straight plug connector with rubber-coated threaded adapter for termination of UNI4883 conduit.
2. RGBF - Non-Environmental; grommet not supplied.
   RRGBF - Environmental; supplied with wire sealing grommet.
3. Standard materials configuration consists of aluminum alloy with plating RoHS compliant.
4. Standard contact material consists of copper alloy with silver plating or gold plating.

© 2015 Glenair, Inc. U.S. CAGE Code 06324 Printed in Italy

Downloaded from Arrow.com.

TABLE I: DIMENSIONS

Shell Size	L Max.	ØQ ±0.5	ØQ1 ±0.5	Rubber conduits UNI 4883
14 S	95	35.0	42.0	20X15 23X18 25X20 27X22 29X24 33X28 38X33 40X35 48X43 50X45
16 S	95	38.0	45.0	
16	105	38.0	45.0	
18	110	43.5	49.0	
20	115	46.5	52.0	
22	115	50.5	56.0	
24	145	54.0	60.0	
28	145	61.0	67.0	
32	150	68.0	76.0	
36	165	74.0	82.0	
40	170	80.0	88.0	

For correct shell size match, please consult the factory.

TABLE II: MODIFICATION CODES

CONTACT OPTIONS	
Sym	**Description**
B0	Connector without Contacts*
B1	Connector with Gold Plated Contacts
Omit for standard version (Silver plated)	

(*) Crimp Contacts Only

© 2015 Glenair, Inc.

Downloaded from Arrow.com.

ITS 4106 RG D1 and ITS 4106 RRG D1
Straight Plug Assembly
with Rubber-Coated Backshell
for Terminator of UNI4883 Rubber Conduit

FR	ITS	G	41	06	RG	20-27	P	Y	XX	D12722
Fire Resistant Rubber Compound	Reverse Bayonet Coupling	Grounding Fingers (Omit for Standard)	Contact Type *41* - Crimp	*06* - Straight Plug Assembly	Connector/Backshell Class *RG* - Non-Environmental; Supplied with Backshell Only *RRG* -Environmental; Supplied with Wire Sealing Grommet	Shell Size and Insert Arrangement (See Section A)	Contact Gender *P* - Pin *S* - Socket	Alternate Insert Rotation (W, X, Y, Z) Omit for Normal (See Section A)	Contact Options (See Table III)	UNI4883 Backshell Adapter Shell Size Designator (See Table II)

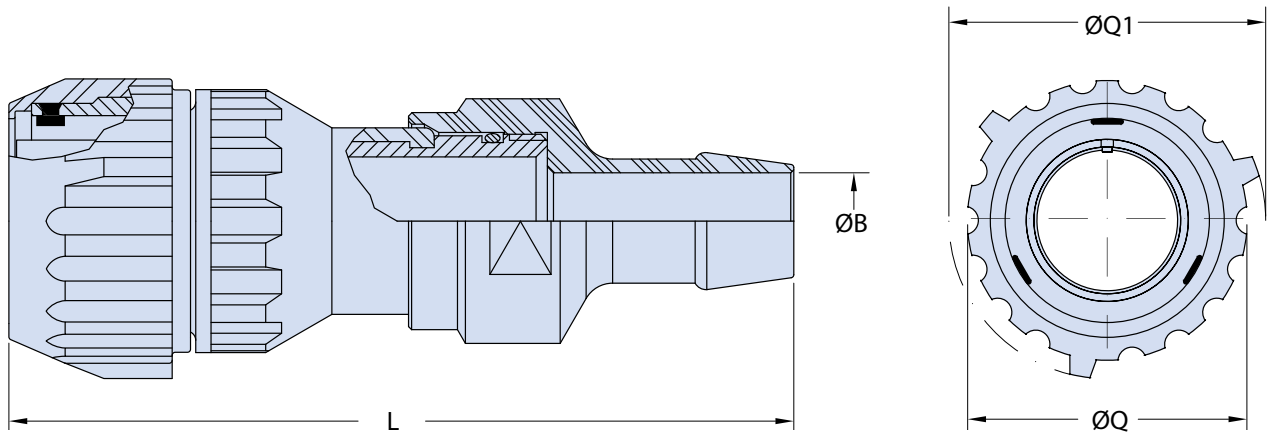

Application Notes

1. Straight plug connector with rubber-coated threaded adapter for termination of UNI4883 conduit.
2. RG- Non-Environmental; grommet not supplied.
   RRG - Environmental; supplied with wire sealing grommet.
3. Standard materials configuration consists of aluminum alloy with plating RoHS compliant.
4. Standard contact material consists of copper alloy with silver plating or gold plating.

© 2015 Glenair, Inc. U.S. CAGE Code 06324 Printed in Italy

Downloaded from Arrow.com.

ITS 4106 RG D1 and ITS 4106 RRG D1
Straight Plug Assembly
with Rubber-Coated Backshell
for Terminator of UNI4883 Rubber Conduit

TABLE I: DIMENSIONS

Shell Size	ØB	L Max.	ØQ ±0.5	ØQ1 ±0.5
14 S	See Table III Below	107	35.0	42.0
16 S		115	38.0	45.0
16		115	38.0	45.0
18		122	43.5	49.0
20		131	46.5	52.0
22		131	50.5	56.0
24		153	54.0	60.0
28		153	61.0	67.0
32		146	68.0	76.0
36		164	74.0	82.0
40		169	80.0	88.0

TABLE II: BACKSHELL DIMENSIONS RUBBER CONDUIT

Shell Size	In accordance with UNI 4883		ØB ±0.1
	Ø Min.	Ø Max.	
14 S	12.0	17.0	11.0
18	15.0	20.0	13.3
20 - 22	12.0	17.0	11.0
20 - 22	18.0	23.0	15.8
20 - 22	22.0	27.0	20.0
20 - 22	25.0	30.0	22.0
20 - 22	35.0	40.0	32.0
24 - 28	20.0	25.0	15.0
24 - 28	22.0	27.0	20.0
24 - 28	25.0	30.0	22.0
24 - 28	28.0	33.0	26.0
24 - 28	30.0	35.0	25.0
24 - 28	35.0	40.0	32.0
24 - 28	45.0	50.0	42.0
32	25.0	30.0	22.0
32	30.0	35.0	25.0
32	35.0	40.0	32.0
32	40.0	45.0	38.0
36	30.0	35.0	25.0
36	35.0	40.0	32.0
40	40.0	45.0	38.0
40	45.0	50.0	42.0
40	50.0	55.0	47.0

TABLE III: MODIFICATION CODES

CONTACT OPTIONS	
Sym	**Description**
B0	Connector without Contacts*
B1	Connector with Gold Plated Contacts
Omit for standard version (Silver plated)	

(*) Crimp Contacts Only

© 2015 Glenair, Inc. U.S. CAGE Code 06324 Printed in Italy

Downloaded from Arrow.com.

ITS 3108 AGG and ITS 4108 RGG
90° Plug Connector with Rubber-Coated Coupling Nut

FR	ITS	G	41	08	AGG	20-27	P	Y	XXX
Fire Resistant Rubber Compound	Reverse Bayonet Coupling	Grounding Fingers (Omit for Standard)	Contact Type *41* - Crimp Contacts	*08* - 90° Plug Assembly	Connector/Backshell Class *AGG* - Non-Environmental; *RGG* - Environmental; Supplied with Grommet	Shell Size and Insert Arrangement (See Section A)	Contact Gender *P* - Pin *S* - Socket	Alternate Insert Rotation (W, X, Y, Z) Omit for Normal (See Section A)	Mod Code Option (See Table II)

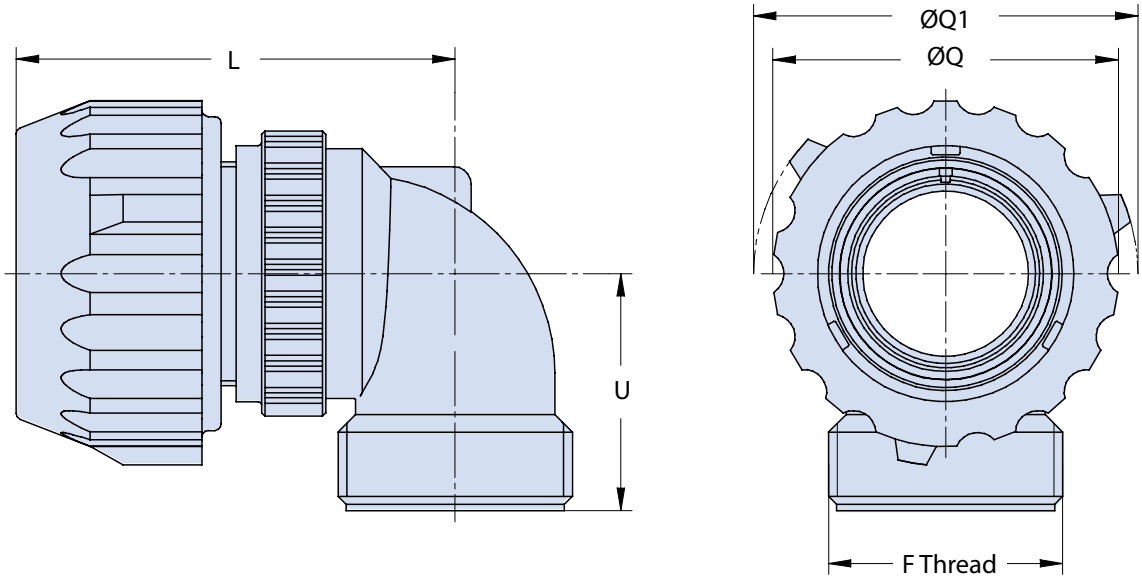

C

Application Notes

1. 90° plug connector with rubber-coated coupling nut.
2. AGG - Non-Environmental; grommet not supplied.
   RGG - Environmental; supplied with wire sealing grommet.
3. Standard materials configuration consists of aluminum alloy.
4. Standard contact material consists of copper alloy with silver plating or gold plating.
5. A broad range of additional connector accessories are available.
   See our website and/or contact the factory for complete information.

© 2015 Glenair, Inc. U.S. CAGE Code 06324 Printed in Italy

Downloaded from Arrow.com.

ITS 3108 AGG and ITS 4108 RGG
90° Plug Connector with Rubber-Coated Coupling Nut

TABLE I: DIMENSIONS

Shell Size	F Thread	L Max.	ØQ ±0.5	ØQ1 ±0.5	U ±0.2
10 SL	0.6250 - 24UNEF	42	28.6	33.5	25.0
14 S	0.7500 - 20UNEF	44	35.0	42.0	26.5
16 S	0.8750 - 20UNEF	48	38.0	45.0	27.0
16	0.8750 - 20UNEF	57	38.0	45.0	27.0
18	1.0000 - 20UNEF	59	43.5	49.0	30.0
20	1.1875 - 18UNEF	64	46.5	52.0	32.0
22	1.1875 - 18UNEF	64	50.5	56.0	32.0
24	1.4375 - 18UNEF	69	54.0	60.0	37.0
28	1.4375 - 18UNEF	69	61.0	67.0	38.0
32	1.7500 - 18UNS	74	68.0	76.0	45.5
36	2.0000 - 18UNS	77	74.0	82.0	47.2
40	2.2500 - 16UN	80	80.0	80.0	52.0

TABLE II: MODIFICATION CODES

CONTACT OPTIONS		
Sym	**Description**	
B0	Connector without Contacts**	
B1	Connector with Gold Plated Contacts	
Omit for standard version (Silver plated)		
STANDARD MATERIAL AND FINISH (*)		
Sym	**Description**	**RoHS**
	Omit for Aluminum/ Cadmium Olive Drab	
F6	Aluminum/ Black Electrodeposited Paint	✓
F7	Aluminum/ Black Zinc Nickel	✓
F11	Aluminum/ Electroless Nickel	✓

(*) Apply to components without rubber covering only.
For further finish options, please contact the factory.

(**) Crimp Contacts Only

© 2015 Glenair, Inc.

Downloaded from Arrow.com.

ITS 4108 RG and ITS 4108 RRG
90° Cylindrical Plug Connector
with Rubber-Coated Cable Sealing Backshell

FR	ITS	G	41	08	RG	20-27	P	Y	XX
Fire Resistant Rubber Compound	Reverse Bayonet Coupling	Grounding Fingers (Omit for Standard)	Contact Type *41* - Crimp Contacts	*08* - 90° Plug Assembly	Connector/Backshell Class *RG* - Non-Environmental; Supplied with Backshell Only *RRG* -Environmental; Supplied with Wire Sealing Grommet	Shell Size and Insert Arrangement (See Section A)	Contact Gender *P* - Pin *S* - Socket	Alternate Insert Rotation (W, X, Y, Z) Omit for Normal (See Section A)	Mod Code Option (See Table II)

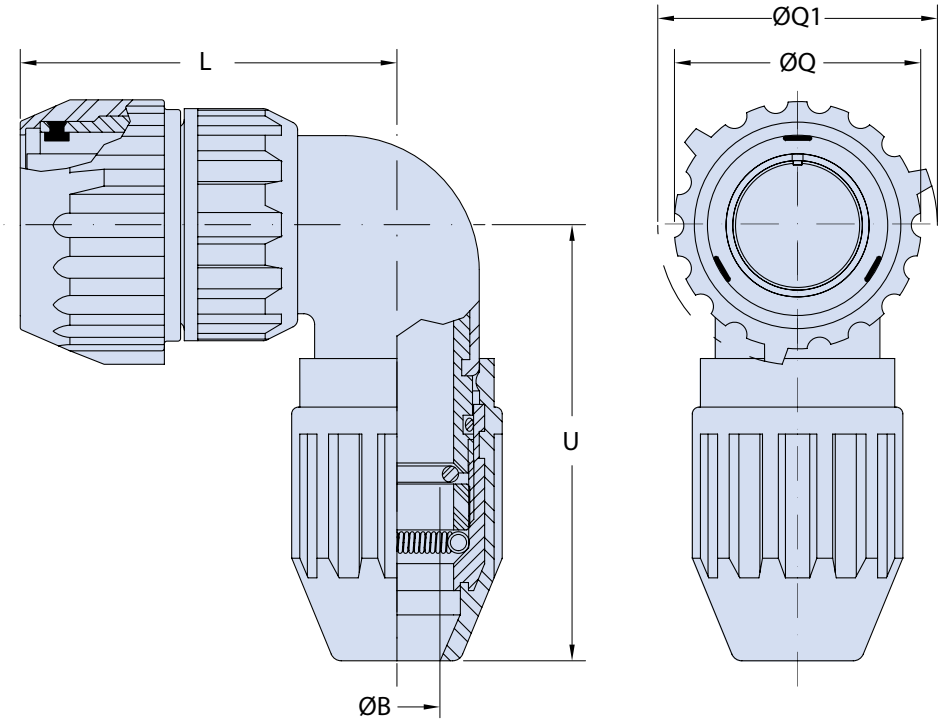

Application Notes

1. 90° plug connector with rubber-coated cable clamp.
2. RG - Non-Environmental; grommet not supplied.
   RRG - Environmental; supplied with wire sealing grommet.
3. Standard materials configuration consists of aluminum alloy with plating RoHS compliant.
4. Standard contact material consists of copper alloy with silver plating or gold plating.

© 2015 Glenair, Inc. U.S. CAGE Code 06324 Printed in Italy

Downloaded from Arrow.com.

TABLE I: DIMENSIONS

Shell Size	ØB		L Max.	ØQ ±0.5	ØQ1 ±0.5	U Max.
	Min.	Max.				
18	12.70	15.90	76	43.5	49.0	70
20	15.90	19.00	79	46.5	52.0	74
22	15.90	19.00	79	50.5	56.0	74
24	19.00	22.20	80	54.0	60.0	84
28	22.20	25.40	81	61.0	67.0	84
32	28.50	31.75	89	68.0	76.0	88
36	31.75	34.90	93	74.0	82.0	95
40	38.00	41.27	97	80.0	88.0	100

TABLE II: MODIFICATION CODES

CONTACT OPTIONS	
Sym	**Description**
B0	Connector without Contacts*
B1	Connector with Gold Plated Contacts
Omit for standard version (Silver plated)	

(*) Crimp Contacts Only

© 2015 Glenair, Inc.

Downloaded from Arrow.com.

ITS 4108 RGP and ITS 4108 RRGP
90° Cylindrical Plug Connector
with Rubber-Coated Cable Sealing Backshell for Use with 03 and 030 Receptacles

FR	ITS	G	41	08	RGP	20-27	P	Y	XX
Fire Resistant Rubber Compound	Reverse Bayonet Coupling	Grounding Fingers (Omit for Standard)	Contact Type *41* - Crimp Contacts	*08* - 90° Plug Assembly	Connector/Backshell Class *RGP* - Non-Environmental; Supplied with Backshell Only *RRGP* - Environmental; Supplied with Wire Sealing Grommet	Shell Size and Insert Arrangement (See Section A)	Contact Gender *P* - Pin *S* - Socket	Alternate Insert Rotation (W, X, Y, Z) Omit for Normal (See Section A)	Mod Code Option (See Table II)

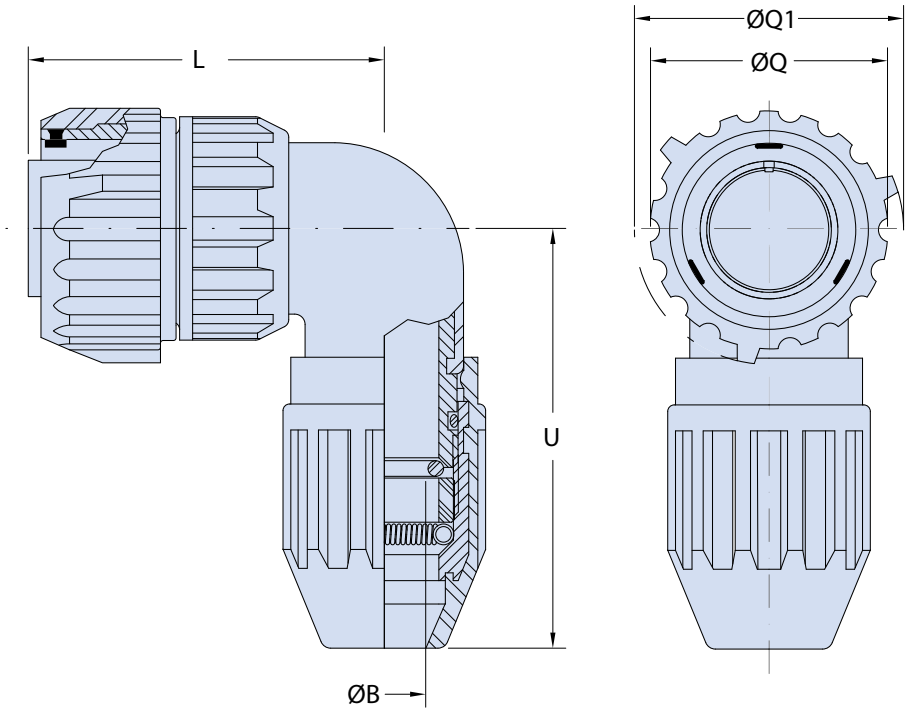

Application Notes

1. 90° cylindrical plug connector with rubber-coated cable sealing backshell with spring style strain relief for use with jacketed cables. Designed for use with 03 and 030 receptacles.
2. RGP - Non-Environmental; grommet not supplied.
   RRGP - Environmental; supplied with wire sealing grommet.
3. Standard materials configuration consists of aluminum alloy with plating RoHS compliant.
4. Standard contact material consists of copper alloy with silver plating or gold plating.

© 2015 Glenair, Inc. U.S. CAGE Code 06324 Printed in Italy

Downloaded from Arrow.com.

TABLE I: DIMENSIONS

Shell Size	ØB		L Max.	ØQ ±0.5	ØQ1 ±0.5	U Max.
	Min.	Max.				
18	12.70	15.90	74	43.5	49.0	70
20	15.90	19.00	77	46.5	52.0	74
22	15.90	19.00	77	50.5	56.0	74
24	19.00	22.20	78	54.0	60.0	84
28	22.20	25.40	79	61.0	67.0	84
32	28.50	31.75	87	68.0	76.0	88
36	31.75	34.90	91	74.0	82.0	95
40	38.00	41.27	95	80.0	88.0	100

TABLE II: MODIFICATION CODES

CONTACT OPTIONS	
Sym	**Description**
B0	Connector without Contacts*
B1	Connector with Gold Plated Contacts
Omit for standard version (Silver plated)	

(*) Crimp Contacts Only

© 2015 Glenair, Inc.

Downloaded from Arrow.com.

ITS 4108 RG D1 and ITS 4108 RRG D1
90° Cylindrical Plug Assembly
with Rubber-Coated Backshell
for Termination of UNI4883 Rubber Conduit

FR	ITS	G	41	08	RG	20-27	P	Y	XX	D12722
Reverse Bayonet Coupling	Fire Resistant Rubber Compound	Grounding Fingers (Omit for Standard)	Contact Type *41* - Crimp	*08* - 90° Plug Assembly	Connector/Backshell Class *RG* - Non-Environmental; Supplied with Backshell Only *RRG* -Environmental; Supplied with Wire Sealing Grommet	Shell Size and Insert Arrangement (See Section A)	Contact Gender *P* - Pin *S* - Socket	Alternate Insert Rotation (W, X, Y, Z) Omit for Normal (See Section A)	Contact Options (See Table III)	UNI4883 Backshell Adapter Shell Size Designator (See Table II)

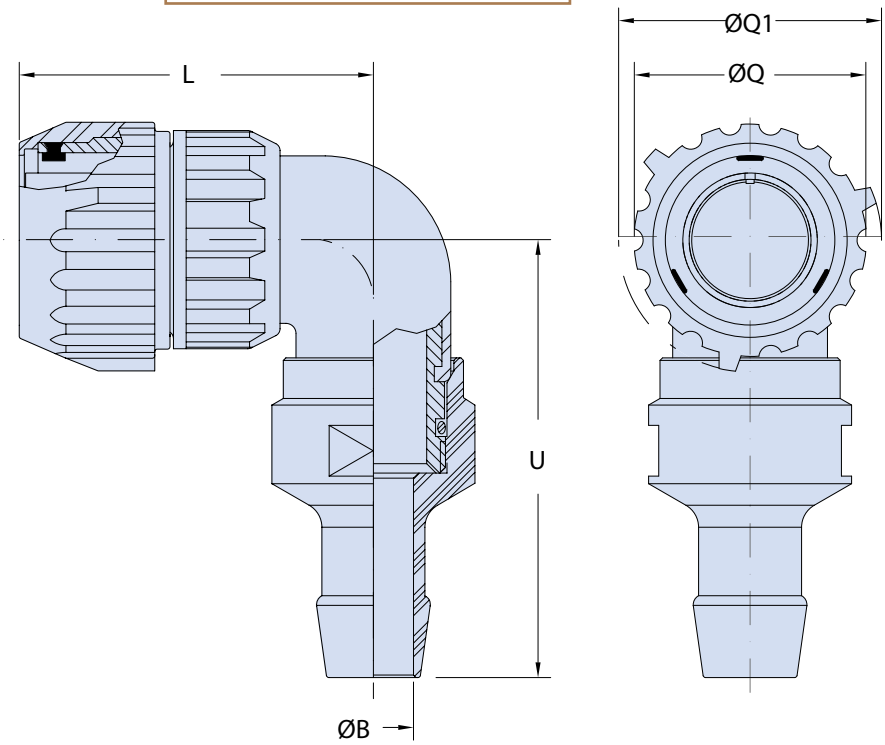

C

Application Notes

1. 90° plug assembly with rubber-coated backshell for termination of UNI41883 type rubber conduit.
2. RG (D1) - Non-Environmental; grommet not supplied.
   RRG (D1) - Environmental; supplied with wire sealing grommet.
3. Standard materials configuration consists of aluminum alloy with plating RoHS compliant.
4. Standard contact material consists of copper alloy with silver plating or gold plating.

© 2015 Glenair, Inc. U.S. CAGE Code 06324 Printed in Italy

Downloaded from Arrow.com.

ITS 4108 RG D1 and ITS 4108 RRG D1
90° Cylindrical Plug Assembly
with Rubber-Coated Backshell
for Termination of UNI4883 Rubber Conduit

TABLE I: DIMENSIONS

Shell Size	Rubber conduits UNI 4883	L Max.	ØQ ±0.5	ØQ1 ±0.5	U Max.
18	See Table III Below	76	43.5	49.0	91.0
20		79	46.5	52.0	91.0
22		79	50.5	56.0	91.0
24		80	54.0	60.0	99.0
28		81	61.0	67.0	99.0
32		89	68.0	76.0	95.0
36		93	74.0	82.0	119.0
40		97	80.0	88.0	115.0

TABLE II: BACKSHELL DIMENSIONS RUBBER CONDUIT

Shell Size	In accordance with UNI 4883		ØB ±0.1
	Ø Min.	Ø Max.	
14 S	12.0	17.0	11.0
18	15.0	20.0	13.3
20 - 22	12.0	17.0	11.0
20 - 22	18.0	23.0	15.8
20 - 22	22.0	27.0	20.0
20 - 22	25.0	30.0	22.0
20 - 22	35.0	40.0	32.0
24 - 28	20.0	25.0	15.0
24 - 28	22.0	27.0	20.0
24 - 28	25.0	30.0	22.0
24 - 28	28.0	33.0	26.0
24 - 28	30.0	35.0	25.0
24 - 28	35.0	40.0	32.0
24 - 28	45.0	50.0	42.0
32	25.0	30.0	22.0
32	30.0	35.0	25.0
32	35.0	40.0	32.0
32	40.0	45.0	38.0
36	30.0	35.0	25.0
36	35.0	40.0	32.0
40	40.0	45.0	38.0
40	45.0	50.0	42.0
40	50.0	55.0	47.0

TABLE III: MODIFICATION CODES

CONTACT OPTIONS	
Sym	**Description**
B0	Connector without Contacts*
B1	Connector with Gold Plated Contacts
Omit for standard version (Silver plated)	

(*) Crimp Contacts Only

© 2015 Glenair, Inc. U.S. CAGE Code 06324 Printed in Italy

Downloaded from Arrow.com.

SERIES 970

PowerTrip™

The Power Connector for Extreme Environments

The Series 970 PowerTrip™ connector is ideal for extreme environment DC, single-phase and three-phase AC power applications. Available in aluminum or stainless steel, the Series 970 features a high ampacity louverband socket contact for reduced joule heating and stable resistance.

DESIGNER'S CHECKLIST	
✓	Triple-Start ACME Threads
✓	Watertight Rubber Seals
✓	High Shock and Vibration
✓	High Temperature
✓	EMI Protection
✓	High Durability
✓	Low Resistance
✓	Crimp, Snap-In Contacts
✓	No. 1/0, 4 and 8 AWG
✓	Improved Backshell Interface
✓	Nickel-PTFE Plating

Glenair®

1211 Air Way
Glendale, California 91201-2497
Telephone: 818-247-6000 · Facsimile: 818-500-9912 · E-mail: sales@glenair.com

United States · United Kingdom · Germany · Nordic · France · Italy · Spain · Japan

www.glenair.com

Downloaded from Arrow.com.

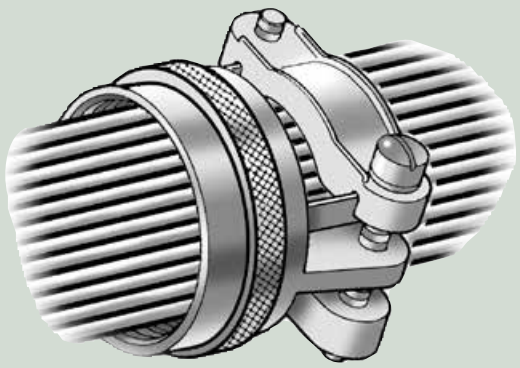

PRODUCT FEATURES

- **Full Line of Environmental, Mechanical and EMI/RFI Connector Backshells and Front-End Accessories**
- **Legacy Reverse Bayonet Accessories as well as Dozens of Newer Glenair Designs**
- **All Materials and Finishes Including Aluminum, Stainless Steel and Marine-Bronze**
- **Backshell Styles Include Extender Backshells, Conduit Adapters, and Environmental Cable Clamps**
- **Other Accessories Include Protective Covers, Dummy Stowage Receptacles, Mounting Gaskets and Wire-Hole Plugs**
- **Select From Hundreds of Part Numbers, Many Available for Immediate Same-Day Shipment**

Glenair Offers the Industry's Largest Selection of Reverse Bayonet Connector Backshell and Accessories

Complete Flexibility in Ordering

The Glenair Series ITS and ITS-RG Reverse Bayonet Connector lines are designed for the ultimate convenience in ordering. Choose from connectors already outfitted with the most popular backshells, or order your connectors and accessories separately. Both approaches offer excellent availability and fast turnaround. Many part numbers are in stock, ready for immediate same-day shipment.

© 2015 Glenair, Inc. U.S. CAGE Code 06324 Printed in Italy

Downloaded from Arrow.com.

IT 101393-XX3
Extender Backshell for Plug Connectors
for Use with Cable Clamp IT3057-XX A/B/C

Basic Part Number and Shell Size Designator (Table I)		Finish Options (Table II)
IT	101393-323	XX

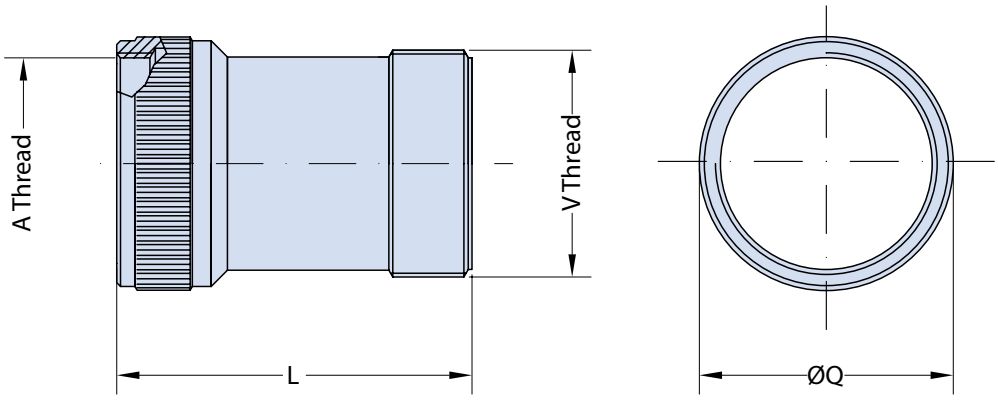

Application Notes

1. To make wiring easier an extender backshell is available for use with cable clamp IT3057-XX A to C.
2. Standard materials configuration consists of aluminum alloy. For platings, see TABLE II finish options.
3. A broad range of other front and rear connector accessories are available.
   See our website and/or contact the factory for complete information.

© 2015 Glenair, Inc. U.S. CAGE Code 06324 Printed in Italy

Downloaded from Arrow.com.

IT 101393-XX3
Extender Backshell for Plug Connectors
for Use with Cable Clamp IT3057-XX A/B/C

Glenair®

TABLE I: ADAPTER PART NUMBERS, SHELL SIZE, THREAD AND DIMENSIONS

Part Number	Shell Size	A Thread	L Max.	ØQ ±0.2	V Thread
IT 101393-123	**10 SL**	0.6250 - 24UNEF	36.0	20.0	0.6250 - 24UNEF
IT 101393-143	**14 S**	0.7500 - 20UNEF	50.0	23.0	0.7500 - 20UNEF
IT 101393-163	**16 S**	0.8750 - 20UNEF	50.0	25.0	0.8750 - 20UNEF
IT 101393-173	**16**	0.8750 - 20UNEF	54.0	25.0	0.8750 - 20UNEF
IT 101393-183	**18**	1.0000 - 20UNEF	56.0	29.5	1.0000 - 20UNEF
IT 101393-203	**20**	1.1250 - 18UNEF	56.0	32.0	1.1875 - 18UNEF
IT 101393-223	**22**	1.2500 - 18UNEF	56.0	35.0	1.1875 - 18UNEF
IT 101393-243	**24**	1.3750 - 18UNEF	56.0	38.5	1.4375 - 18UNEF
IT 101393-283	**28**	1.6250 - 18UNEF	61.0	45.0	1.4375 - 18UNEF
IT 101393-323	**32**	1.8750 - 16UN	61.0	53.2	1.7500 - 18UNS
IT 101393-363	**36**	2.0625 - 16UN	61.0	57.4	2.0000 - 18UNS
IT 101393-403	**40**	2.3125 - 16UN	61.0	63.2	2.2500 - 16UN

TABLE II

STANDARD MATERIAL AND FINISH (*)		
Sym	**Description**	**RoHS**
	Omit for Aluminum/ Cadmium Olive Drab	
F6	Aluminum/ Black Electrodeposited Paint	✓
F7	Aluminum/ Black Zinc Nickel	✓
F11	Aluminum/ Electroless Nickel	✓
MB	Marine Bronze/ Unplated	✓
FK	Stainless Steel/ Passivate	✓

(*) For further options, please contact the factory.

© 2015 Glenair, Inc. U.S. CAGE Code 06324 Printed in Italy

Downloaded from Arrow.com.

IT 37267-XXBRXX
BR Adapter
for Termination of UNI4883 Rubber Conduit

Basic Part Number and Shell Size Designator (Table I)	Nipple End Dimension Designator	Finish Options (Table II)
IT 37267-32	BR4035	XX

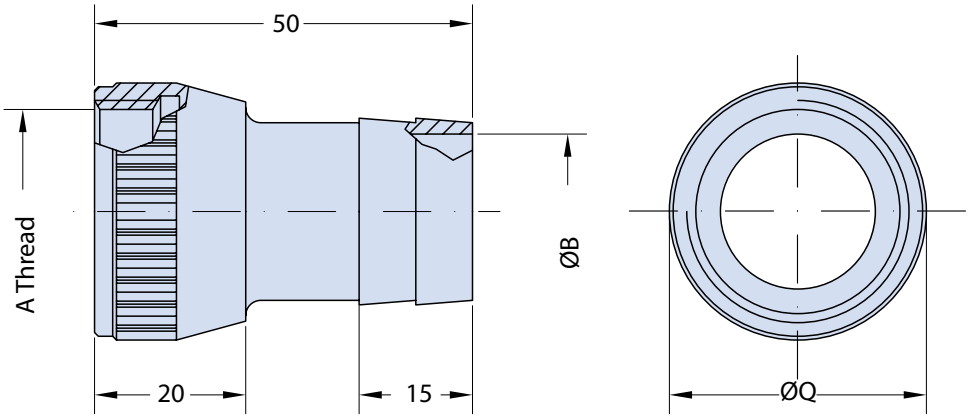

Application Notes

1. Backshell for the attachment of UNI4883 type rubber conduit.
2. Standard materials configuration consists of aluminum alloy. For platings, see TABLE II finish options.

© 2015 Glenair, Inc. U.S. CAGE Code 06324 Printed in Italy

Downloaded from Arrow.com.

IT 37267-XXBRXX
BR Adapter
for Termination of UNI4883 Rubber Conduit

Glenair®

TABLE I: ADAPTER PART NUMBERS, SHELL SIZE, THREAD & DIMENSIONS

Part Number	Shell Size	A Thread	ØB ±0.1	ØQ ±0.2
IT 37267-10BR 1712	10SL	0.6250 - 24UNEF	10.5	20.0
IT 37267-14SBR 2722	14S	0.7500 - 20UNEF	16.5	25.0
IT 37267-16/16SBR 1712	16-16S	0.8750 - 20UNEF	10.5	28.0
IT 37267-16/16SBR 2015	16-16S	0.8750 - 20UNEF	14.0	28.0
IT 37267-18BR 2722	18	1.0000 - 20UNEF	20.5	30.0
IT 37267-20/22BR 1712	20 - 22	1.1875 - 18UNEF	10.5	34.0
IT 37267-20/22BR 2520	20 - 22	1.1875 - 18UNEF	18.5	34.0
IT 37267-20/22BR 2722	20 - 22	1.1875 - 18UNEF	20.5	34.0
IT 37267-20/22BR 3328	20 - 22	1.1875 - 18UNEF	31.5	34.0
IT 37267-20/22BR 3530	20 - 22	1.1875 - 18UNEF	28.5	34.0
IT 37267-24/28BR 2520	24 - 28	1.4375 - 18UNEF	16.5	45.0
IT 37267-24/28BR 2722	24 - 28	1.4375 - 18UNEF	20.5	45.0
IT 37267-24/28BR 3025	24 - 28	1.4375 - 18UNEF	23.5	45.0
IT 37267-24/28BR 3328	24 - 28	1.4375 - 18UNEF	26.5	45.0
IT 37267-24/28BR 3530	24 - 28	1.4375 - 18UNEF	26.5	45.0
IT 37267-24/28BR 3833	24 - 28	1.4375 - 18UNEF	31.5	45.0
IT 37267-24/28BR 5045	24 - 28	1.4375 - 18UNEF	43.5	52.0
IT 37267-32BR 3025	32	1.7500 - 18UNS	23.5	53.0
IT 37267-32BR 3328	32	1.7500 - 18UNS	26.5	53.0
IT 37267-32BR 3530	32	1.7500 - 18UNS	28.5	53.0
IT 37267-32BR 4035	32	1.7500 - 18UNS	31.5	53.0
IT 37267-32BR 4540	32	1.7500 - 18UNS	38.5	53.0
IT 37267-32BR 5045	32	1.7500 - 18UNS	40.0	53.0
IT 37267-36BR 3530	36	2.0000 - 18UNS	26.5	57.4
IT 37267-36BR 4035	36	2.0000 - 18UNS	31.5	57.4
IT 37267-36BR 5045	36	2.0000 - 18UNS	43.5	57.4
IT 37267-40BR 3530	40	2.2500 - 16UN	28.5	63.0
IT 37267-40BR 4035	40	2.2500 - 16UN	31.5	63.0
IT 37267-40BR 4540	40	2.2500 - 16UN	38.5	63.0
IT 37267-40BR 5045	40	2.2500 - 16UN	43.5	63.0
IT 37267-40BR 5550	40	2.2500 - 16UN	48.5	63.0

TABLE II

STANDARD MATERIAL AND FINISH (*)		
Sym	**Description**	**RoHS**
	Omit for Aluminum/ Cadmium Olive Drab	
F6	Aluminum/ Black Electrodeposited Paint	✓
F7	Aluminum/ Black Zinc Nickel	✓
F11	Aluminum/ Electroless Nickel	✓
MB	Marine Bronze/ Unplated	✓
FK	Stainless Steel/ Passivate	✓

(*) For further options, please contact the factory.

© 2015 Glenair, Inc. U.S. CAGE Code 06324 Printed in Italy

Downloaded from Arrow.com.

IT 3057-XXA
Cable Clamp, General Duty
for Jacketed or Multipolar Cable or Wires Protected by Tubing

Basic Part Number and Shell Size Designator (Table I)	Finish Options (Table II)
IT 3057-20A	XX

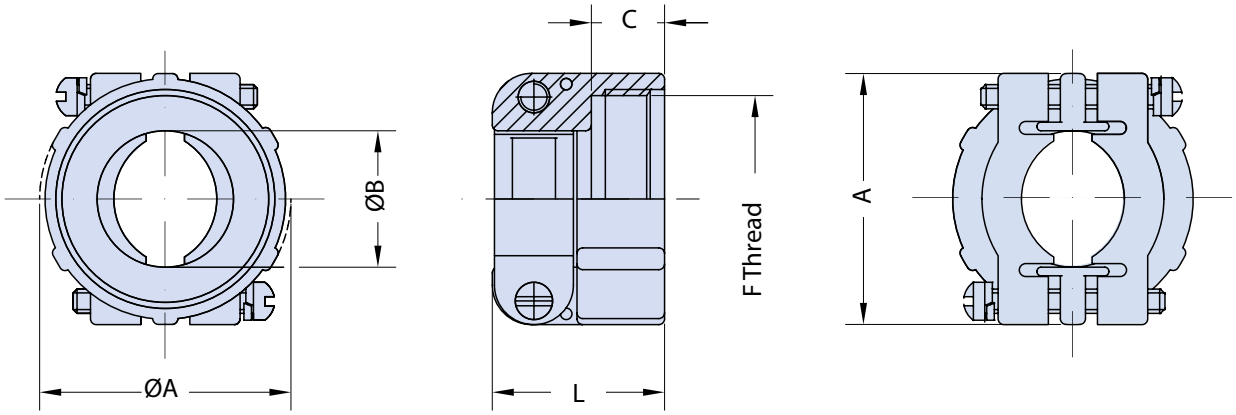

Application Notes

1. General duty cable clamp suitable for jacketed or multipolar cable or wires protected by tubing.
2. Standard materials configuration consists of aluminum alloy. For platings, see TABLE II finish options.

© 2015 Glenair, Inc. U.S. CAGE Code 06324 Printed in Italy

Downloaded from Arrow.com.

IT 3057-XXA
Cable Clamp, General Duty
for Jacketed or Multipolar Cable or Wires Protected by Tubing

Glenair®

TABLE I: CABLE CLAMP PART NUMBERS, SHELL SIZE, SLEEVING, DIMENSIONS & THREAD

Part Number	Shell Size	Sleeve to Use	ØA	ØB	C	F Thread	L Max.
IT 3057- 4A	**10 SL**	**IT 3420- 4**	25	8.2	10.2	0.6250 - 24UNEF	21.0
IT 3057- 6A	**14 S**	**IT 3420- 6**	27	11.2	10.2	0.7500 - 20UNEF	22.2
IT 3057- 8A	**16 S - 16**	**IT 3420- 8**	28	14.2	10.2	0.8750 - 20UNEF	24.0
IT 3057-10A	**18**	**IT 3420-10**	33	16.0	10.2	1.0000 - 20UNEF	28.5
IT 3057-12A	**20 - 22**	**IT 3420-12**	35	19.0	10.2	1.1875 - 18UNEF	24.0
IT 3057-16A	**24 - 28**	**IT 3420-16**	43	23.8	10.5	1.4375 - 18UNEF	26.0
IT 3057-20A	**32**	**IT 3420-20**	51	31.7	12.5	1.7500 - 18UNS	28.0
IT 3057-24A	**36**	**IT 3420-24**	58	35.0	14.0	2.0000 - 18UNS	29.4
IT 3057-28A	**40**	**IT 3420-28**	65	41.2	14.0	2.2500 - 16UN	42.8

TABLE II

STANDARD MATERIAL AND FINISH (*)		
Sym	**Description**	**RoHS**
	Omit for Aluminum/ Cadmium Olive Drab	
F6	Aluminum/ Black Electrodeposited Paint	✓
F7	Aluminum/ Black Zinc Nickel	✓
F11	Aluminum/ Electroless Nickel	✓

(*) For further options, please contact the factory.

© 2015 Glenair, Inc. U.S. CAGE Code 06324 Printed in Italy

Downloaded from Arrow.com.

IT 3057-XXC
Waterproof Cable Clamp
for Jacketed Cable or Wires Protected by Tubing

Basic Part Number and Shell Size Designator (Table I)		Finish Options (Table II)
IT	3057-20C	XX

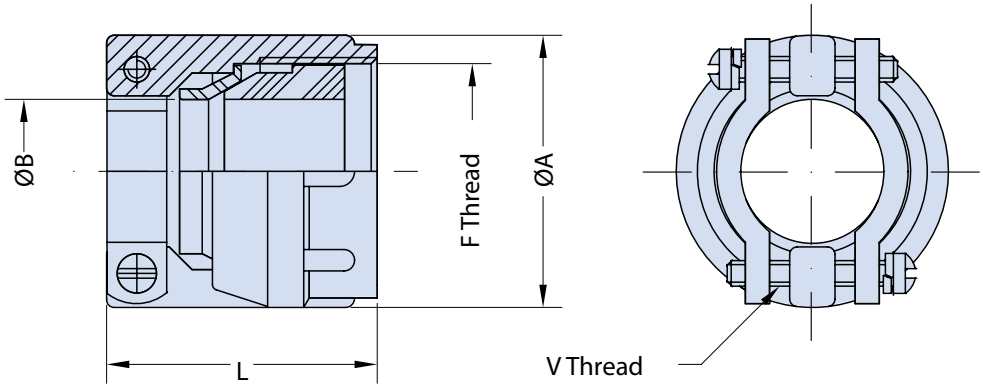

Application Notes

1. Waterproof cable clamp suitable for jacketed cable or wires protected by tubing. Assures watertight integrity of connector.
2. Standard materials configuration consists of aluminum alloy. For platings, see TABLE II finish options.

© 2015 Glenair, Inc. U.S. CAGE Code 06324 Printed in Italy

Downloaded from Arrow.com.

IT 3057-XXC
Waterproof Cable Clamp
for Jacketed Cable or Wires Protected by Tubing

Glenair®

TABLE I: CABLE CLAMP PART NUMBERS, SHELL SIZE, SLEEVING, DIMENSIONS & THREAD

Part Number	Shell Size	Sleeve to Use	ØA	ØB		F Thread	L	V Thread
				min.	Max.			
IT 3057- 4C	**10 SL**	IT 3420 - 4A	22.6	2.38	7.93	0.6250 - 24UNEF	32.3	6 - 32NC
IT 3057- 6C	**14 S**	IT 3420 - 4A / 6A	25.8	5.84	11.12	0.7500 - 20UNEF	32.3	6 - 32NC
IT 3057- 8C	**16 S - 16**	IT 3420 - 6A / 8A	28.1	8.00	13.48	0.8750 - 20UNEF	32.3	6 - 32NC
IT 3057-10C	**18**	IT 3420 - 6A / 10A	31.0	9.60	15.87	1.0000 - 20UNEF	35.3	6 - 32NC
IT 3057-12C	**20 - 22**	IT 3420 - 8A / 12A	37.3	11.30	19.00	1.1875 - 18UNEF	35.7	8 - 32NC
IT 3057-16C	**24 - 28**	IT 3420 - 8A / 12A / 16A	42.0	15.50	23.80	1.4375 - 18UNEF	38.5	8 - 32NC
IT 3057-20C	**32**	IT 3420 - 12A / 16A / 20A	54.0	23.40	31.75	1.7500 - 18UNS	44.8	250 - 20NC
IT 3057-24C	**36**	IT 3420 - 16A / 18A / 24A	57.1	23.40	35.00	2.0000 - 18UNS	51.6	250 - 20NC
IT 3057-28C	**40**	IT 3420 - 16A / 20A / 28A	63.5	29.90	41.25	2.2500 - 16UN	51.6	250 - 20NC

TABLE II

STANDARD MATERIAL AND FINISH (*)		
Sym	**Description**	**RoHS**
	Omit for Aluminum/ Cadmium Olive Drab	
F6	Aluminum/ Black Electrodeposited Paint	✓
F7	Aluminum/ Black Zinc Nickel	✓
F11	Aluminum/ Electroless Nickel	✓
MB	Marine Bronze/ Unplated	✓
FK	Stainless Steel/ Passivate	✓

(*) For further options, please contact the factory.

© 2015 Glenair, Inc. U.S. CAGE Code 06324 Printed in Italy

Downloaded from Arrow.com.

IT 3420-XX (Class A) and IT 3420-XXA (Class C) Neoprene Sleeve for Protection & Reduction

used with Class A or C Cable Clamps

Basic Part Number and Shell Size Designator (Table I)

IT **3420-XX**

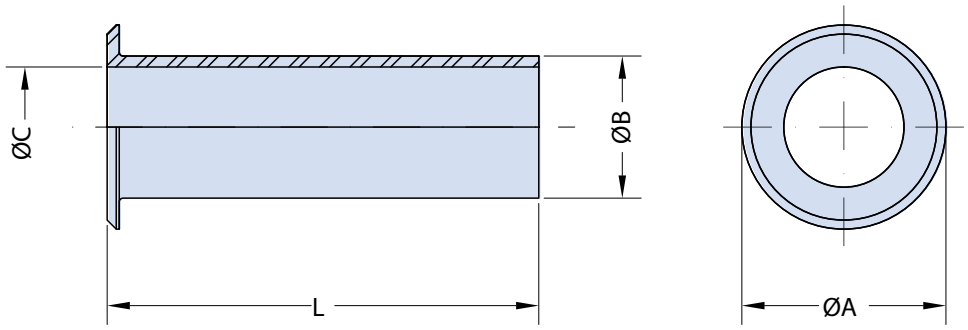

IT3420-XX Neoprene Sleeve used with Class A Cable Clamps

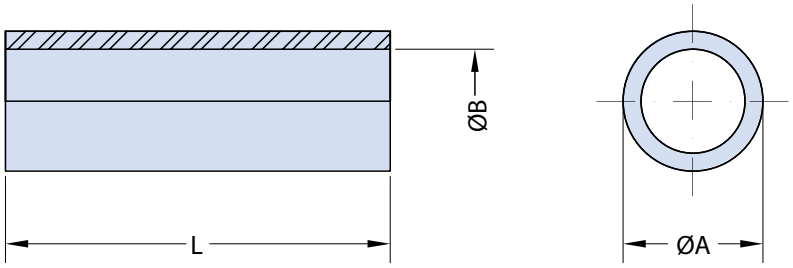

IT3420-XXA Neoprene Sleeve used with Class C Cable Clamps

Application Notes

1. IT3420-XX: Neoprene bushing for protection and reduction, used with class A cable clamps.
2. IT3420-XXA: Neoprene bushing for protection and reduction, used with class C cable clamps.

© 2015 Glenair, Inc. U.S. CAGE Code 06324 Printed in Italy

Downloaded from Arrow.com.

IT 3420-XX (Class A) and IT 3420-XXA (Class C) Neoprene Sleeve for Protection & Reduction
used with Class A or C Cable Clamps

Glenair®

TABLE I: IT3420-XX NEOPRENE SLEEVE PART NUMBERS & DIMENSIONS

Part Number	ØA	ØB	ØC	L
IT 3420 - 4	12.8	7.7	5.6	69.9
IT 3420 - 6	15.7	10.8	7.9	66.7
IT 3420 - 8	18.9	14.0	11.1	63.5
IT 3420 - 10	22.6	15.6	14.3	60.3
IT 3420 - 12	27.5	18.8	15.9	57.2
IT 3420 - 16	33.4	23.5	19.1	54.0
IT 3420 - 20	40.6	31.5	23.8	50.8
IT 3420 - 24	46.9	34.7	31.8	47.6
IT 3420 - 28	53.0	41.0	34.9	44.5

TABLE II: IT3420-XXA NEOPRENE PART NUMBERS & SLEEVE DIMENSIONS

Part Number	ØA	ØB	L ±0.8
IT 3420 - 4A	7.7	5.6	50.8
IT 3420 - 6A	10.8	7.9	50.8
IT 3420 - 8A	13.5	11.1	50.8
IT 3420 - 10A	15.6	11.1	50.8
IT 3420 - 12A	18.8	13.7	50.8
IT 3420 - 16A	23.5	19.1	50.8
IT 3420 - 18A	28.3	23.8	50.8
IT 3420 - 20A	31.5	23.8	50.8
IT 3420 - 24A	34.7	28.6	50.8
IT 3420 - 28A	41.0	31.8	50.8

© 2015 Glenair, Inc. U.S. CAGE Code 06324 Printed in Italy

Downloaded from Arrow.com.

ITB 02T-XX
Receptacle Connector Cap
with Stainless Steel Chain

Basic Part Number and Shell Size Designator (Table I)	Length (in mm) Omit for Standard Length (Table I)	Material/Finish Options (Table II)	Ring Eyelet Diameter 4.3, 5.6 Omit for Standard (Table I)
ITB 02T-32	-XXX	XX	X.X

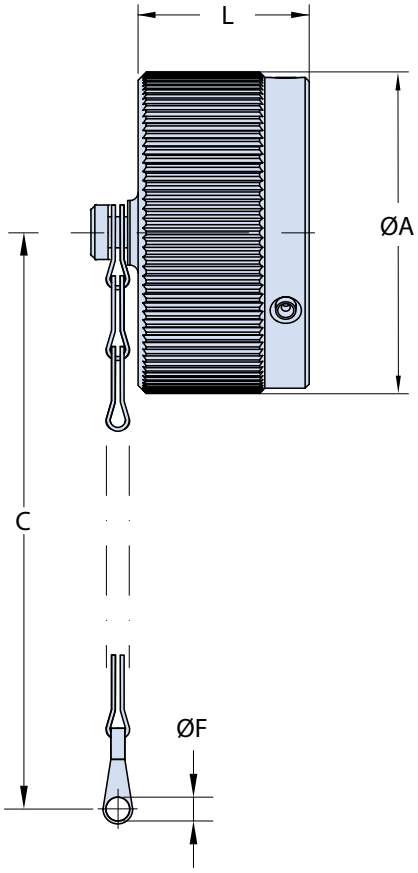

Application Notes

1. Metal protective cap for bayonet receptacle connectors with stainless steel chain.
2. Standard materials configuration consists of aluminum alloy. For platings, see TABLE II finish options.

© 2015 Glenair, Inc. U.S. CAGE Code 06324 Printed in Italy

Downloaded from Arrow.com.

ITB 02T-XX
Receptable Connector Cap
with Stainless Steel Chain

Glenair®

TABLE I: RECEPTACLE CONNECTOR CAP PART NUMBERS, CONNECTOR SIZE AND DIMENSIONS

Part Number	Connector Size	ØA ±0.5	C Min.	ØF ±0.2 -0	L Max.
ITB 02T -10SL	10SL	22.6	108	4.3	16.0
ITB 02T -14	14S	29.0	108	4.3	16.0
ITB 02T -16	16S	32.0	108	4.3	16.0
ITB 02T -17	16	32.0	123	4.3	21.0
ITB 02T -18	18	36.5	123	4.3	21.7
ITB 02T -20	20	39.8	123	4.3	21.7
ITB 02T -22	22	43.0	123	4.3	21.7
ITB 02T -24	24	46.4	123	4.3	21.7
ITB 02T -28	28	53.0	206	5.6	21.7
ITB 02T -32	32	60.0	206	5.6	21.7
ITB 02T -36	36	66.2	206	5.6	21.7
ITB 02T -40	40	72.3	206	5.6	21.7

TABLE II

STANDARD MATERIAL AND FINISH (*)		
Sym	**Description**	**RoHS**
	Omit for Aluminum/ Cadmium Olive Drab	
F6	Aluminum/ Black Electrodeposited Paint	✓
F7	Aluminum/ Black Zinc Nickel	✓
F11	Aluminum/ Electroless Nickel	✓
MB	Marine Bronze/ Unplated	✓
FK	Stainless Steel/ Passivate	✓

(*) For further options, please contact the factory.

© 2015 Glenair, Inc. U.S. CAGE Code 06324 Printed in Italy

Downloaded from Arrow.com.

ITB 02TF-XX
Receptacle Connector Cap
with Stainless Steel Wire Rope

Basic Part Number and Shell Size Designator (Table I)	Length (in mm) Omit for Standard Length (Table I)	Material/Finish Options (Table II)	Ring Eyelet Diameter 4.3, 5.6 Omit for Standard (Table I)
ITB 02TF-32	-XXX	XX	X.X

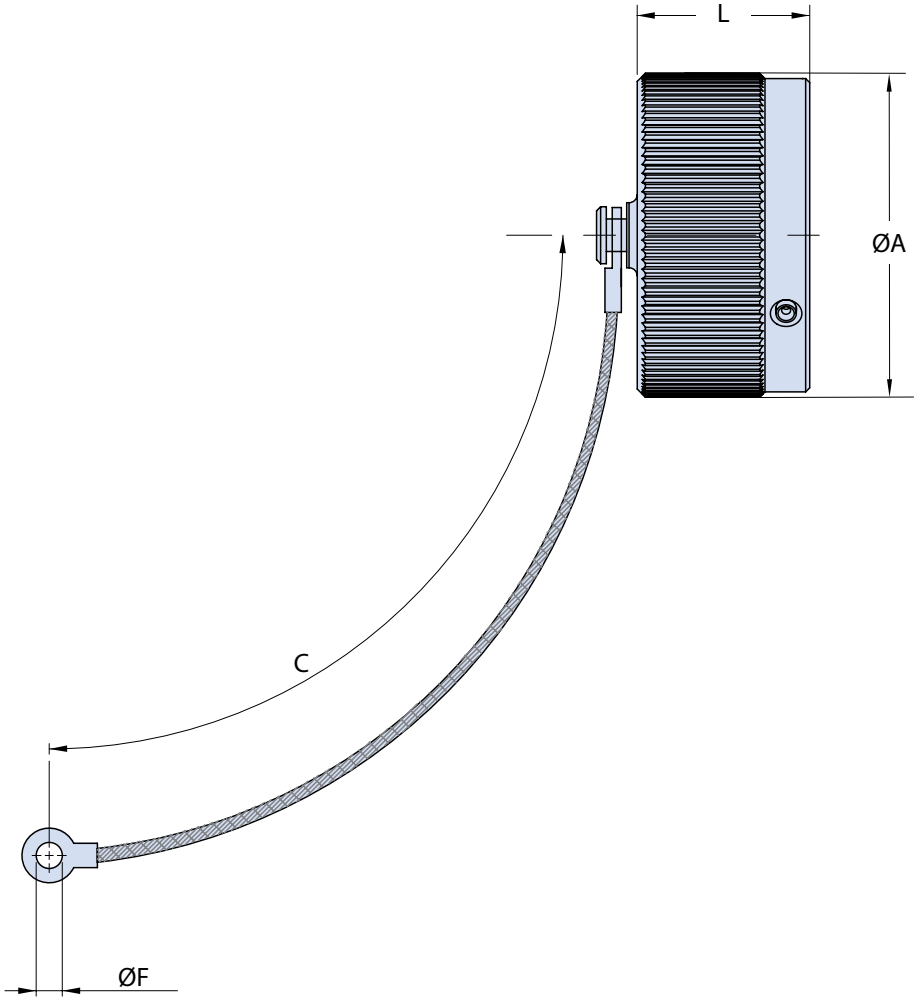

Application Notes

1. Metal protective cap for bayonet receptacle connectors with stainless steel wire rope.
2. Standard materials configuration consists of aluminum alloy. For platings, see TABLE II finish options.

© 2015 Glenair, Inc. U.S. CAGE Code 06324 Printed in Italy

Downloaded from Arrow.com.

ITB 02TF-XX
Receptacle Connector Cap
with Stainless Steel Wire Rope

Glenair®

TABLE I: RECEPTACLE CONNECTOR CAP PART NUMBERS, CONNECTOR SIZE AND DIMENSIONS

Part Number	Connerctor Size	ØA ±0.5	C Min.	ØF ±0.2 -0	L Max.
ITB 02TF -10SL	10SL	22.6	193	4.3	16.0
ITB 02TF -14	14S	29.0	193	4.3	16.0
ITB 02TF -16	16S	32.0	193	4.3	16.0
ITB 02TF -17	16	32.0	193	4.3	21.0
ITB 02TF -18	18	36.5	193	4.3	21.7
ITB 02TF -20	20	39.8	193	4.3	21.7
ITB 02TF -22	22	43.0	193	4.3	21.7
ITB 02TF -24	24	46.4	193	4.3	21.7
ITB 02TF -28	28	53.0	193	5.3	21.7
ITB 02TF -32	32	60.0	193	5.3	21.7
ITB 02TF -36	36	66.2	193	5.3	21.7
ITB 02TF -40	40	72.3	193	5.3	21.7

TABLE II

STANDARD MATERIAL AND FINISH (*)		
Sym	**Description**	**RoHS**
	Omit for Aluminum/ Cadmium Olive Drab	
F6	Aluminum/ Black Electrodeposited Paint	✓
F7	Aluminum/ Black Zinc Nickel	✓
F11	Aluminum/ Electroless Nickel	✓
MB	Marine Bronze/ Unplated	✓
FK	Stainless Steel/ Passivate	✓

(*) For further options, please contact the factory.

© 2015 Glenair, Inc. U.S. CAGE Code 06324 Printed in Italy

Downloaded from Arrow.com.

ITB 02KA-XX
Receptacle Connector Cap
with Polyamide Black Rope

Basic Part Number and Shell Size Designator (Table I)		Material/Finish Options (Table II)
ITB	02KA-14S	XX

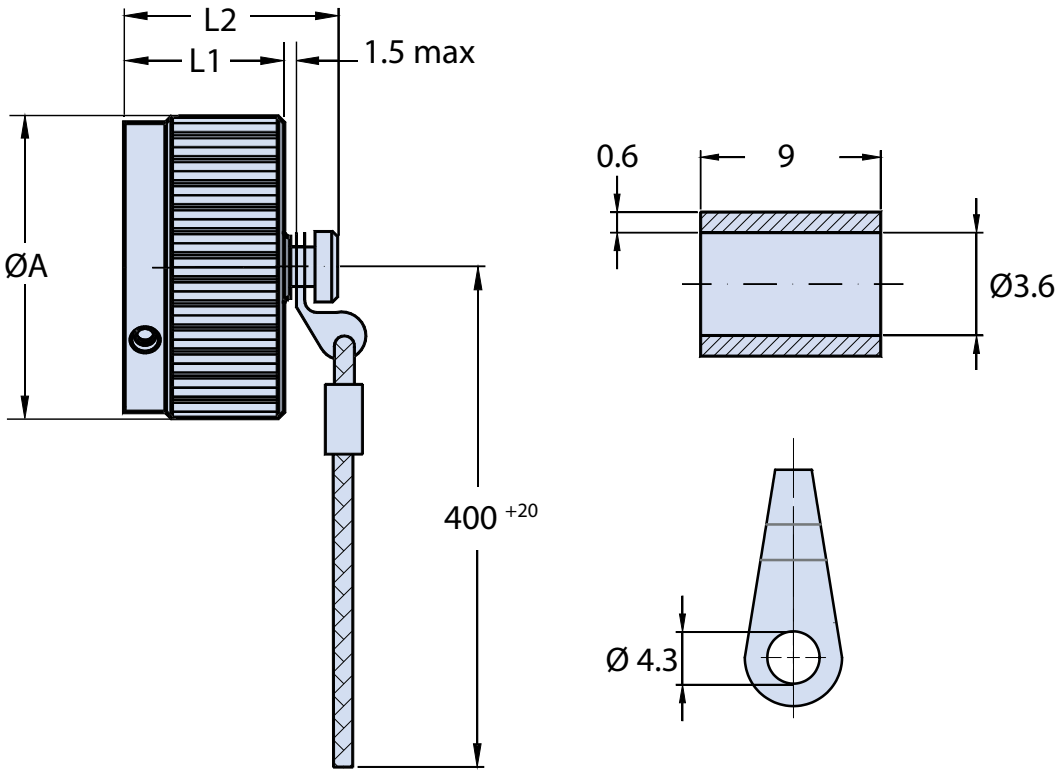

Application Notes

1. Metal protective cap for bayonet receptacle connectors with polyamide black rope, supplied with loose terminal link and crimp sleeve.
2. Standard configuration consists of aluminum alloy with cadmium olive drab passivation IAW QQ-P-416. Other options for material and finish are available. See our website and/or contact the factory for complete information.

© 2015 Glenair, Inc. U.S. CAGE Code 06324 Printed in Italy

Downloaded from Arrow.com.

ITB 02KA-XX
Receptacle Connector Cap
with Polyamide Black Rope

Glenair®

TABLE I: RECEPTACLE CONNECTOR CAP PART NUMBERS, CONNECTOR SIZE AND DIMENSIONS

Part Number	Connerctor Size	ØA ±0.5	L1 Max.	L Max.
ITB 02KA -10SL	10SL	22.6	15.4	16.0
ITB 02KA -14S	14S	29.0	15.4	16.0
ITB 02KA -16	16S	32.0	15.4	16.0
ITB 02KA -17	16	32.0	22.0	21.0
ITB 02KA -18	18	36.5	22.0	21.7
ITB 02KA -20	20	39.8	22.0	21.7
ITB 02KA -22	22	43.0	22.0	21.7
ITB 02KA -24	24	46.4	22.0	21.7
ITB 02KA -28	28	53.0	22.0	21.7
ITB 02KA -32	32	60.0	24.8	21.7
ITB 02KA -36	36	66.2	24.8	21.7
ITB 02KA -40	40	72.3	24.8	21.7

TABLE II

STANDARD MATERIAL AND FINISH (*)		
Sym	**Description**	**RoHS**
	Omit for Aluminum/ Cadmium Olive Drab	
F6	Aluminum/ Black Electrodeposited Paint	✓
F7	Aluminum/ Black Zinc Nickel	✓
F11	Aluminum/ Electroless Nickel	✓
MB	Marine Bronze/ Unplated	✓
FK	Stainless Steel/ Passivate	✓

(*) For further options, please contact the factory.

© 2015 Glenair, Inc. U.S. CAGE Code 06324 Printed in Italy

Downloaded from Arrow.com.

ITB 06T-XX
Plug Connector Cap
with Stainless Steel Chain

Basic Part Number and Shell Size Designator (Table I)	Length (in mm) Omit for Standard Length (Table I)	Material/Finish Options (Table II)	Ring Eyelet Diameter 4.3, 4.8, 5.6 Omit for Standard (Table I)
ITB 06T-32	-XXX	XX	X.X

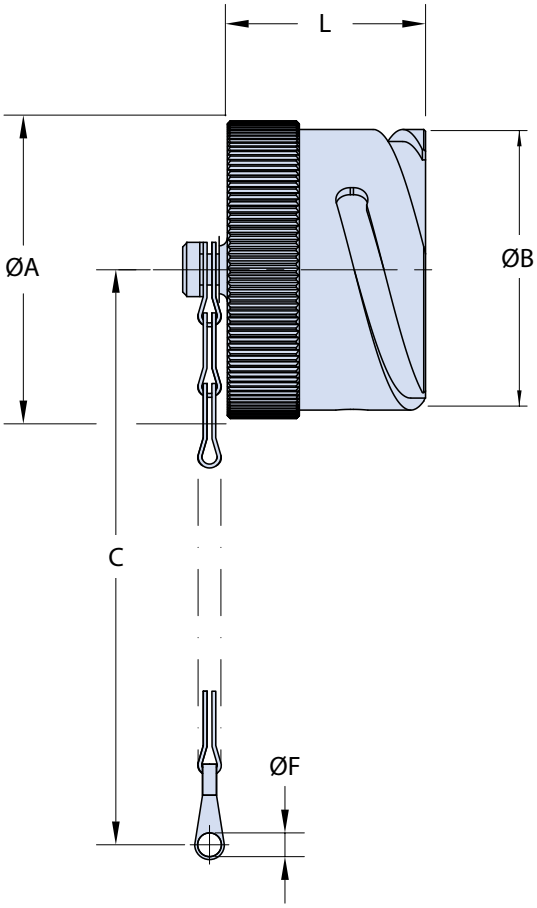

Application Notes

1. Metal protective cap for bayonet plug connectors with stainless steel chain.
2. Standard materials configuration consists of aluminum alloy. For platings, see TABLE II finish options.

© 2015 Glenair, Inc. U.S. CAGE Code 06324 Printed in Italy

Downloaded from Arrow.com.

ITB 06T-XX
Plug Connector Cap
with Stainless Steel Chain

Glenair®

TABLE I: PLUG CONNECTOR CAP PART NUMBERS, CONNECTOR SIZE AND DIMENSIONS

Part Number	Connector Size	ØA Max.	ØB ±0.1	C Min.	ØF +0.2 -0	L Max.
ITB 06T-10 SL	10SL	22.7	18.2	108	4.3	24.0
ITB 06T-14	14S	30.0	24.6	123	4.3	24.0
ITB 06T-16	16S	32.5	27.4	123	4.3	24.0
ITB 06T-17	16	32.5	27.4	123	4.3	33.0
ITB 06T-18	18	36.4	30.8	123	4.3	33.0
ITB 06T-20	20	40.5	34.2	138	4.8	33.0
ITB 06T-22	22	43.5	37.4	138	4.8	33.0
ITB 06T-24	24	46.5	40.9	138	4.8	33.0
ITB 06T-28	28	54.0	46.7	206	4.8	33.0
ITB 06T-32	32	60.0	53.4	206	5.6	34.2
ITB 06T-36	36	66.2	59.6	206	5.6	34.2
ITB 06T-40	40	73.0	65.5	206	5.6	34.2

TABLE II

STANDARD MATERIAL AND FINISH (*)		
Sym	**Description**	**RoHS**
	Omit for Aluminum/ Cadmium Olive Drab	
F6	Aluminum/ Black Electrodeposited Paint	✓
F7	Aluminum/ Black Zinc Nickel	✓
F11	Aluminum/ Electroless Nickel	✓
MB	Marine Bronze/ Unplated	✓
FK	Stainless Steel/ Passivate	✓

(*) For further options, please contact the factory.

© 2015 Glenair, Inc. U.S. CAGE Code 06324 Printed in Italy

Downloaded from Arrow.com.

ITB 06TF-XX
Plug Connector Cap
with Stainless Steel Wire Rope

Basic Part Number and Shell Size Designator (Table I)	Length (in mm) Omit for Standard Length (Table I)	Material/Finish Options (Table II)	Ring Eyelet Diameter 4.3, 5.3 Omit for Standard (Table I)
ITB 06TF-32	-XXX	XX	X.X

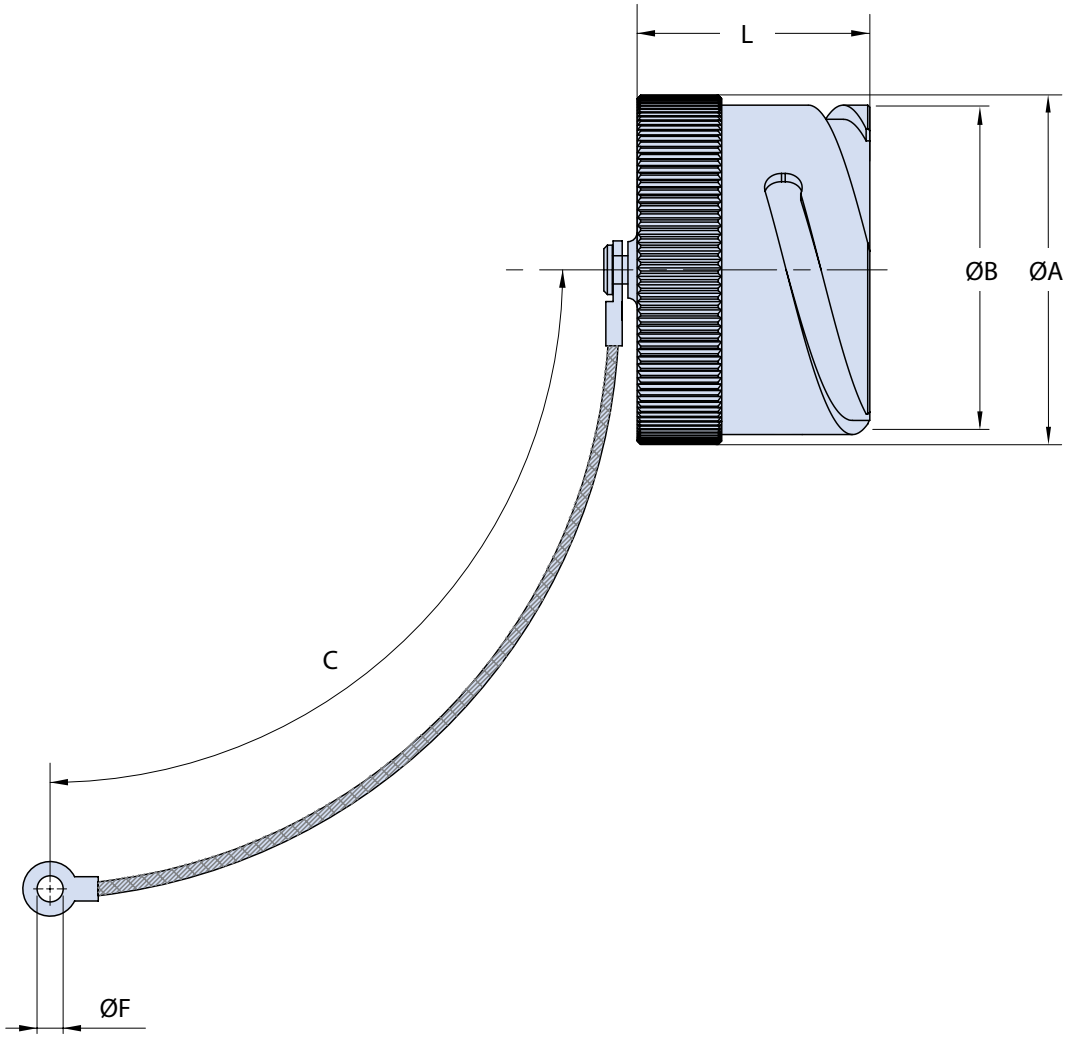

Application Notes

1. Metal protective cap for bayonet plug connectors with stainless steel wire rope.
2. Standard materials configuration consists of aluminum alloy. For platings, see TABLE II finish options.

© 2015 Glenair, Inc. U.S. CAGE Code 06324 Printed in Italy

Downloaded from Arrow.com.

ITB 06TF-XX
Plug Connector Cap
with Stainless Steel Wire Rope

Glenair®

TABLE I: PLUG CONNECTOR CAP PART NUMBER, CONNECTOR SIZE AND DIMENSIONS

Part Number	Connector Size	ØA Max.	ØB ±0.1	C Min.	ØF ±0.2 -0	L Max.
ITB 06TF -10SL	10SL	22.7	18.2	193	4.3	24.0
ITB 06TF -14	14S	30.0	24.6	193	4.3	24.0
ITB 06TF -16	16S	32.5	27.4	193	4.3	24.0
ITB 06TF-17	16	32.5	27.4	193	4.3	33.0
ITB 06TF -18	18	36.4	30.8	193	4.3	33.0
ITB 06TF -20	20	40.5	34.2	193	4.3	33.0
ITB 06TF -22	22	43.5	37.4	193	4.3	33.0
ITB 06TF -24	24	46.5	40.9	193	4.3	33.0
ITB 06TF -28	28	54.0	46.7	193	5.3	33.0
ITB 06TF -32	32	60.0	53.4	193	5.3	34.2
ITB 06TF -36	36	66.2	59.6	193	5.3	34.2
ITB 06TF -40	40	73.0	65.5	193	5.3	34.2

TABLE II

STANDARD MATERIAL AND FINISH (*)		
Sym	**Description**	**RoHS**
	Omit for Aluminum/ Cadmium Olive Drab	
F6	Aluminum/ Black Electrodeposited Paint	✓
F7	Aluminum/ Black Zinc Nickel	✓
F11	Aluminum/ Electroless Nickel	✓
MB	Marine Bronze/ Unplated	✓
FK	Stainless Steel/ Passivate	✓

(*) For further options, please contact the factory.

© 2015 Glenair, Inc. U.S. CAGE Code 06324 Printed in Italy

Downloaded from Arrow.com.

ITB 06KC-XX
Plug Connector Cap
with Polyamide Black Rope

Basic Part Number and Shell Size Designator (Table I)	Material/Finish Options (Table II)
ITB 06KC-14S	XX

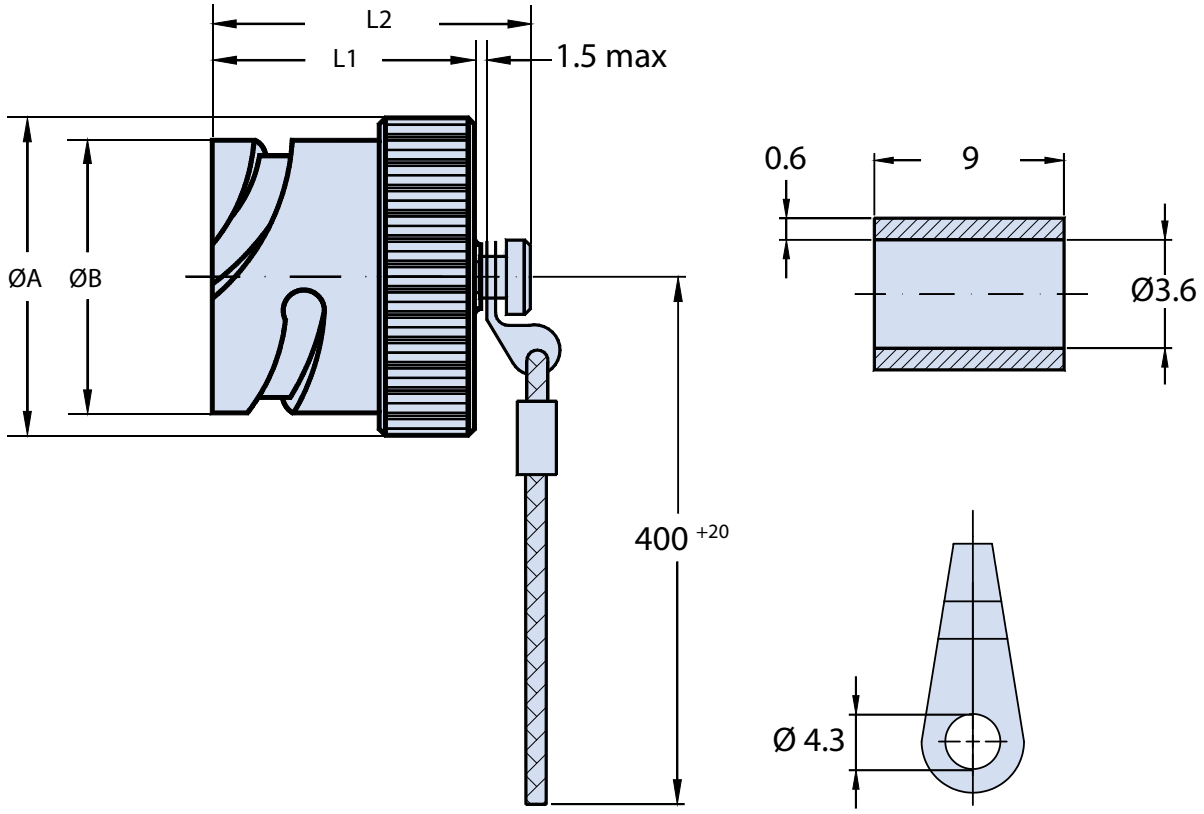

Application Notes

1. Metal protective cap for bayonet plug connectors with polyamide black rope, supplied with loose terminal link and crimp sleeve.
2. Standard configuration consists of aluminum alloy with cadmium olive drab passivation IAW QQ-P-416. Other options for material and finish are available. See our website and/or contact the factory for complete information.

© 2015 Glenair, Inc. U.S. CAGE Code 06324 Printed in Italy

Downloaded from Arrow.com.

ITB 06KC-XX
Plug Connector Cap
with Polyamide Black Rope

Glenair®

TABLE I: PLUG CONNECTOR CAP PART NUMBER, CONNECTOR SIZE AND DIMENSIONS

Part Number	Connerctor Size	ØA Max.	ØB ±0.1	L1 Max.	L2 Max.
ITB 06KC -10SL	10SL	22.7	18.2	24.0	29.5
ITB 06KC -14S	14S	30.0	24.6	24.0	29.5
ITB 06KC -16	16S	32.5	27.4	24.0	29.5
ITB 06KC -17	16	32.5	27.4	33.0	37.7
ITB 06KC -18	18	36.4	30.8	33.0	37.7
ITB 06KC -20	20	40.5	34.2	33.0	37.7
ITB 06KC -22	22	43.5	37.4	33.0	37.7
ITB 06KC -24	24	46.5	40.9	33.0	37.7
ITB 06KC -28	28	54.0	46.7	33.0	37.7
ITB 06KC -32	32	60.0	53.4	34.2	38.9
ITB 06KC -36	36	66.2	59.6	34.2	38.9
ITB 06KC -40	40	73.0	65.5	34.2	38.9

TABLE II

STANDARD MATERIAL AND FINISH (*)		
Sym	**Description**	**RoHS**
	Omit for Aluminum/ Cadmium Olive Drab	
F6	Aluminum/ Black Electrodeposited Paint	✓
F7	Aluminum/ Black Zinc Nickel	✓
F11	Aluminum/ Electroless Nickel	✓
MB	Marine Bronze/ Unplated	✓
FK	Stainless Steel/ Passivate	✓

(*) For further options, please contact the factory.

© 2015 Glenair, Inc. U.S. CAGE Code 06324 Printed in Italy

Downloaded from Arrow.com.

ITB 07T-XX
Jam Nut Connector Cap
with Stainless Steel Chain

Basic Part Number and Shell Size Designator (Table I)	Length (in mm) Omit for Standard Length (Table I)	Material/Finish Options (Table II)

ITB 07T-32 -XXX XX

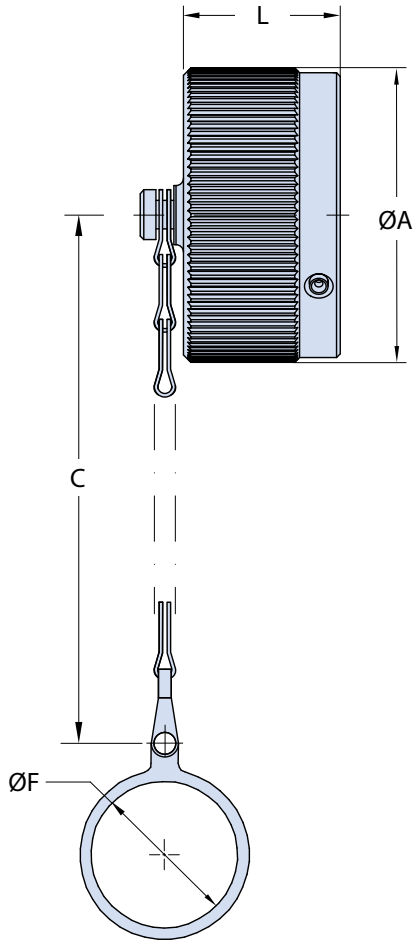

Application Notes

1. Metal protective cap for bayonet receptacle connectors with stainless steel chain.
2. Standard materials configuration consists of aluminum alloy. For platings, see TABLE II finish options.

© 2015 Glenair, Inc. U.S. CAGE Code 06324 Printed in Italy

Downloaded from Arrow.com.

ITB 07T-XX
Jam Nut Connector Cap
with Stainless Steel Chain

TABLE I: RECEPTACLE CONNECTOR CAP PART NUMBERS, CONNECTOR SIZE AND DIMENSIONS

Part Number	Connector Size	ØA ±0.5	C Min.	ØF +0.2 -0.1	L Max.
ITB 07T -10SL	10SL	22.6	119	22.65	16.0
ITB 07T -14	14S	29.0	121	29.00	16.0
ITB 07T -16	16S	32.0	121	32.15	16.0
ITB 07T -17	16	32.0	137	32.15	21.0
ITB 07T -18	18	36.5	138	35.35	21.7
ITB 07T -20	20	39.8	138	38.50	21.7
ITB 07T -22	22	43.0	138	41.00	21.7
ITB 07T -24	24	46.4	138	44.70 (!)	21.7
ITB 07T -28	28	53.0	221	51.20 (!)	21.7
ITB 07T -32	32	60.0	221	57.50 (!)	21.7
ITB 07T -36	36	66.2	221	63.80 (!)	21.7
ITB 07T -40	40	72.3	221	70.20 (!)	21.7

(!) Please contact the factory.

TABLE II

STANDARD MATERIAL AND FINISH (*)		
Sym	**Description**	**RoHS**
	Omit for Aluminum/ Cadmium Olive Drab	
F6	Aluminum/ Black Electrodeposited Paint	✓
F7	Aluminum/ Black Zinc Nickel	✓
F11	Aluminum/ Electroless Nickel	✓
MB	Marine Bronze/ Unplated	✓
FK	Stainless Steel/ Passivate	✓

(*) For further options, please contact the factory.

© 2015 Glenair, Inc. U.S. CAGE Code 06324 Printed in Italy

Downloaded from Arrow.com.

ITB 07TF-XX
Jam Nut Connector Cap
with Stainless Steel Wire Rope

Basic Part Number and Shell Size Designator (Table I)	Length (in mm) Omit for Standard Length (Table I)	Material/Finish Options (Table II)
ITB 07TF-32	-XXX	XX

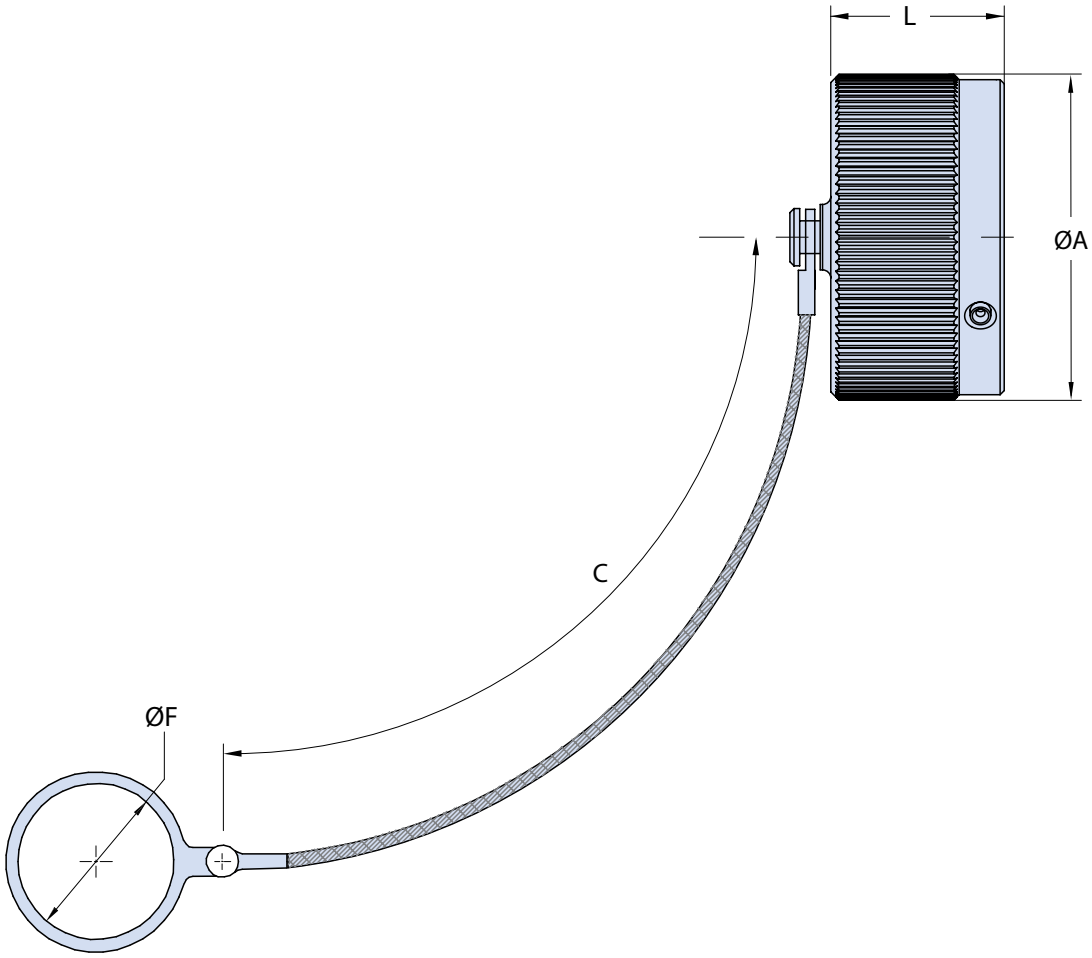

Application Notes

1. Metal protective cap for bayonet receptacle connectors with stainless steel wire rope.
2. Standard materials configuration consists of aluminum alloy. For platings, see TABLE II finish options.

© 2015 Glenair, Inc. U.S. CAGE Code 06324 Printed in Italy

Downloaded from Arrow.com.

ITB 07TF-XX
Jam Nut Connector Cap
with Stainless Steel Wire Rope

TABLE I: RECEPTACLE CONNECTOR CAP PART NUMBERS, CONNECTOR SIZE AND DIMENSIONS

Part Number	Connerctor Size	ØA ±0.5	C Min.	ØF +0.3 -0.1	L Max.
ITB 07TF -10SL	10SL	22.6	208	22.65	16.0
ITB 07TF -14S	14S	29.0	208	29.00	16.0
ITB 07TF -16	16S	32.0	208	32.15	16.0
ITB 07TF -17	16	32.0	208	32.15	21.0
ITB 07TF -18	18	36.5	208	35.35	21.7
ITB 07TF -20	20	39.8	208	38.50	21.7
ITB 07TF -22	22	43.0	208	41.00	21.7
ITB 07TF -24	24	46.4	208	45.00 (!)	21.7
ITB 07TF -28	28	53.0	208	51.20 (!)	21.7
ITB 07TF -32	32	60.0	208	57.50 (!)	21.7
ITB 07TF -36	36	66.2	208	63.80 (!)	21.7
ITB 07TF -40	40	72.3	208	70.20 (!)	21.7

(!) Please contact the factory.

TABLE II

STANDARD MATERIAL AND FINISH (*)		
Sym	**Description**	**RoHS**
	Omit for Aluminum/ Cadmium Olive Drab	
F6	Aluminum/ Black Electrodeposited Paint	✓
F7	Aluminum/ Black Zinc Nickel	✓
F11	Aluminum/ Electroless Nickel	✓
MB	Marine Bronze/ Unplated	✓
FK	Stainless Steel/ Passivate	✓

(*) For further options, please contact the factory.

© 2015 Glenair, Inc. U.S. CAGE Code 06324 Printed in Italy

Downloaded from Arrow.com.

ITB 07TFN-XX
Jam Nut Connector Cap
with Polyamide Black Rope

Basic Part Number and Shell Size Designator (Table I)	Material/Finish Options (Table II)
ITB 07TFN-32	XX

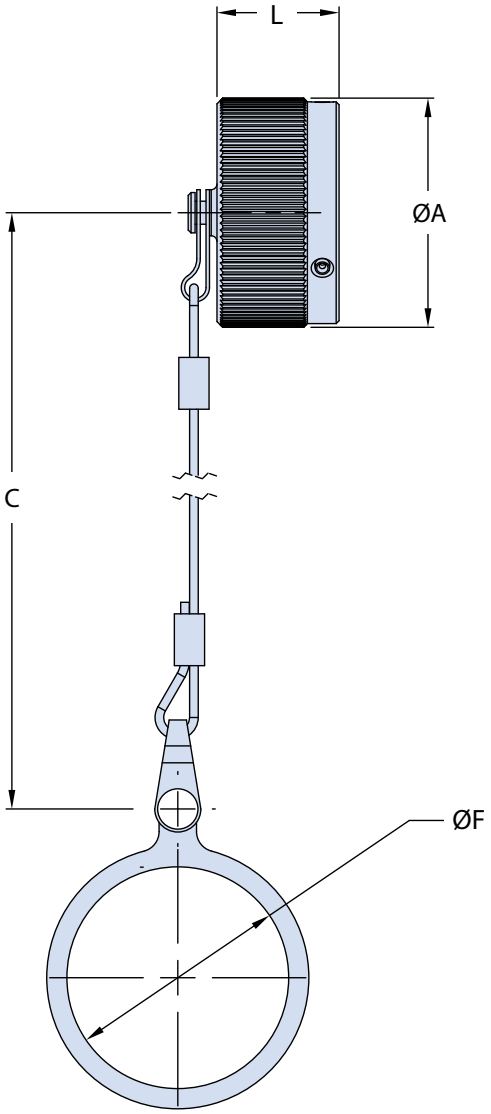

Application Notes

1. Metal protective cap for bayonet receptacle connectors with polyamide black rope.
2. Standard materials configuration consists of aluminum alloy with cadmium olive drab passivation. For platings, see TABLE II finish options.

© 2015 Glenair, Inc. U.S. CAGE Code 06324 Printed in Italy

Downloaded from Arrow.com.

ITB 07TFN-XX
Jam Nut Connector Cap
with Polyamide Black Rope

Glenair®

TABLE I: RECEPTACLE CONNECTOR CAP PART NUMBERS, CONNECTOR SIZE AND DIMENSIONS

Part Number	Connerctor Size	ØA ±0.5	C Min.	ØF +0.3 -0.1	L ±0.2
ITB 07TFN -10SL	10SL	22.6	208	22.65	15.4
ITB 07TFN -14S	14S	29.0	208	29.00	15.4
ITB 07TFN -16	16S	32.0	208	32.15	15.4
ITB 07T FN-17	16	32.0	208	32.15	22.0
ITB 07TFN -18	18	36.5	208	35.35	22.0
ITB 07TFN -20	20	39.8	208	38.50	22.0
ITB 07TFN-22	22	43.0	208	41.00	22.0
ITB 07TFN -24	24	46.4	208	45.00 (!)	22.0
ITB 07TFN -28	28	53.0	208	51.20 (!)	22.0
ITB 07TFN -32	32	60.0	208	57.50 (!)	24.8
ITB 07TFN-36	36	66.2	208	63.80 (!)	24.8
ITB 07TFN -40	40	72.3	208	70.20 (!)	24.8

(!) Please contact the factory.

TABLE II

STANDARD MATERIAL AND FINISH (*)		
Sym	**Description**	**RoHS**
	Omit for Aluminum/ Cadmium Olive Drab	
F6	Aluminum/ Black Electrodeposited Paint	✓
F7	Aluminum/ Black Zinc Nickel	✓
F11	Aluminum/ Electroless Nickel	✓
MB	Marine Bronze/ Unplated	✓
FK	Stainless Steel/ Passivate	✓

(*) For further options, please contact the factory.

© 2015 Glenair, Inc. U.S. CAGE Code 06324 Printed in Italy

Downloaded from Arrow.com.

IT 90376-XX R
Plug Connector Protective Plastic Dust Cap

TABLE I: PLUG PLASTIC DUST CAP PART NUMBERS, SHELL SIZE AND DIMENSIONS

Part Number	Shell Size	ØA ±0.25	ØB ±0.25	ØC ±0.78
IT 90376-10R	Plug 10SL	15.37	16.89	21.33
IT 90376-14R	Plug 14S	21.59	22.99	28.57
IT 90376-15R	-	23.62	25.65	30.47
IT 90376-16R	Plug 16S - 16	24.71	26.29	30.99
IT 90376-18R	Plug 18	27.76	29.34	33.78
IT 90376-20R	Plug 20	31.28	33.04	37.21
IT 90376-22R	Plug 22	34.04	35.81	40.38
IT 90376-24R	Plug 24	37.16	38.94	43.18
IT 90376-28R	Plug 28	43.56	45.46	49.53
IT 90376-32R	Plug 32	49.91	51.82	56.39
IT 90376-36R	Plug 36	56.26	58.16	61.85
IT 90376-40R	Plug 40	61.98	64.26	67.56

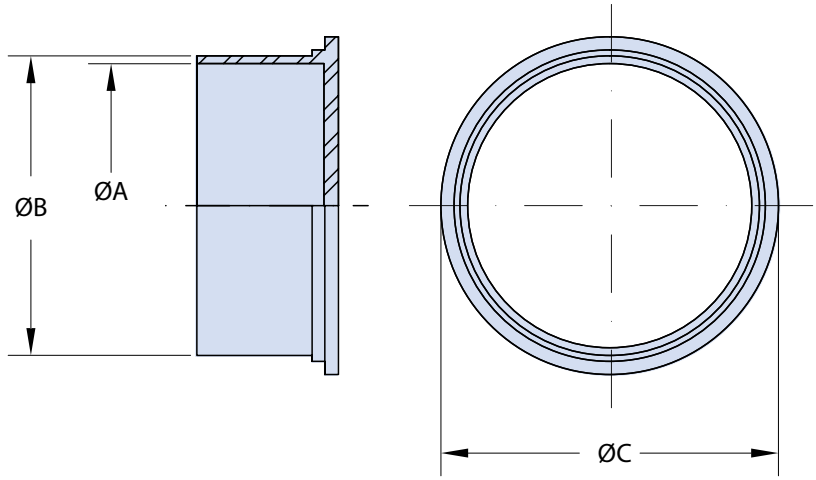

Application Notes

1. Plastic cap for plug connectors for protection against dust and mechanical damage.

© 2015 Glenair, Inc. U.S. CAGE Code 06324 Printed in Italy

Downloaded from Arrow.com.

IT 90376-XX (Y/R) AND TP02-XX
Receptacle Connector Protective Plastic Dust Cap

TABLE II: RECEPTACLE PLASTIC DUST CAP PART NUMBERS, SHELL SIZE AND DIMENSIONS

Part Number	Shell Size	ØA ±0.25	ØB ±0.25	ØC ±0.78
IT 90376-12R	Receptacle 10SL	18.29	19.68	24.64
TP02-14S	Receptacle 14S	24.40	27.05	30.00
IT 90376-18Y	Receptacle 16S - 16	26.11	27.63	31.75
T P02-18	Receptacle 18	30.40	33.15	37.00
IT 90376-22R	Receptacle 20	34.04	35.81	40.38
IT 90376-24R	Receptacle 22	37.16	38.94	43.18
TP02-24	Receptacle 24	40.65	43.20	47.00
TP02-28	Receptacle 28	46.45	49.05	52.00
TP02-32	Receptacle 32	53.15	55.75	60.00
TP02-36	Receptacle 36	59.35	61.95	66.00
TP02-40	Receptacle 40	65.25	67.85	72.00

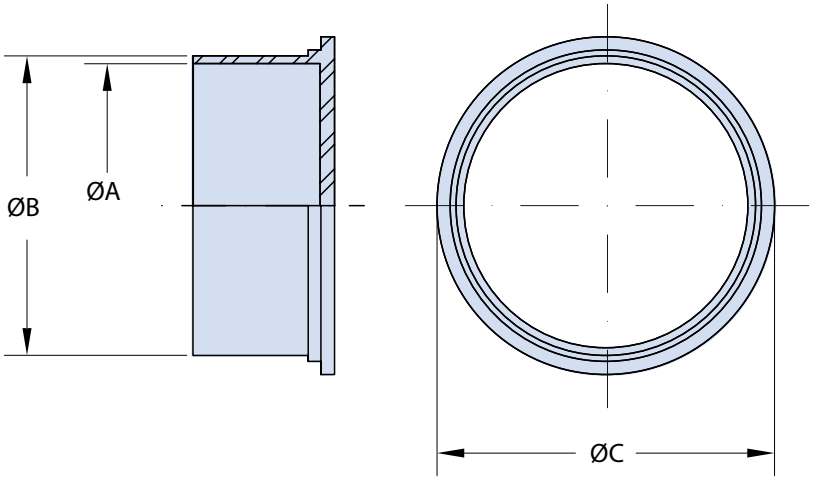

Application Notes

1. Plastic cap for receptacle connectors for protection against dust and mechanical damage.

© 2015 Glenair, Inc. U.S. CAGE Code 06324 Printed in Italy

Downloaded from Arrow.com.

ITS 05-XX
Dummy Plug Stowage Receptacle

Reverse Bayonet Coupling
ITS - Alumium Shell whit Stainless Steel Stud
ITB - Marine Bronze or Stainless Steel Shell without Stainless Steel Studs
For further details, see diagram page A-38

Basic Part Number and Shell Size Designator (Table I)

Material/Finish Options (Table II)

ITS **05-32** **XX**

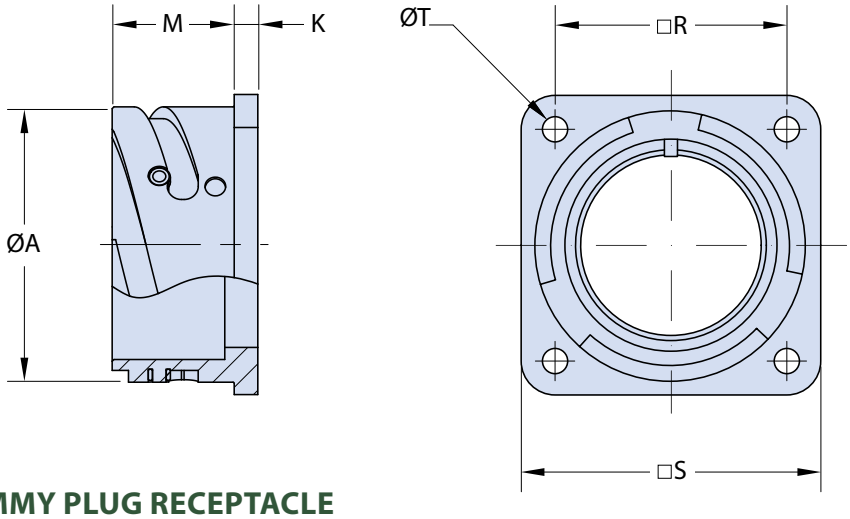

TABLE I: DUMMY PLUG RECEPTACLE SHELL SIZE & DIMENSIONS

Shell Size	ØA +0.2 -0.1	K ±0.2	M +0.4 0	R ±0.2	S ±0.2	ØT +0.1 0
10 SL	18.2	2.8	14.2	18.25	25.4	3.2
14 S	24.5	3.2	14.2	23.00	30.4	3.2
16 S	27.2	3.2	14.2	24.60	32.5	3.2
16	27.2	3.2	19.0	24.60	32.5	3.2
18	30.7	4.0	19.0	27.00	35.0	3.2
20	34.0	4.0	19.0	29.40	38.0	3.2
22	37.3	4.0	19.0	31.75	41.0	3.2
24	40.9	4.0	20.6	34.90	44.5	3.7
28	46.7	4.0	20.6	39.70	50.9	3.7
32	53.4	4.0	22.2	44.45	57.0	4.3
36	59.6	4.0	22.2	49.20	63.5	4.3
40	65.5	4.0	22.2	55.55	69.9	4.3

TABLE II

STANDARD MATERIAL AND FINISH (*)		
Sym	**Description**	**RoHS**
	Omit for Aluminum/ Cadmium Olive Drab	
F6	Aluminum/ Black Electrodeposited Paint	✓
F7	Aluminum/ Black Zinc Nickel	✓
F11	Aluminum/ Electroless Nickel	✓
MB	Marine Bronze/ Unplated	✓
FK	Stainless Steel/ Passivate	✓

(*) For further options, please contact the factory.

Application Notes

1. Dummy receptacle stowage fitting protects the plug connector when not in use.
2. Standard materials configuration consists of aluminum alloy. For platings, see TABLE II finish options.

© 2015 Glenair, Inc. U.S. CAGE Code 06324 Printed in Italy

Downloaded from Arrow.com.

ITS 050-XX
Dummy Receptacle for Rear Panel Mounting

Glenair®

Reverse Bayonet Coupling
ITS - Alumium Shell whit Stainless Steel Stud
ITB - Marine Bronze or Stainless Steel Shell without Stainless Steel Studs
For further details, see diagram page A-38

Mounting Holes (Omit for Threaded FP for Through)

Shell Size Designator (Table I)

Finish Options (Table II)

ITS 050 FP -32 XX

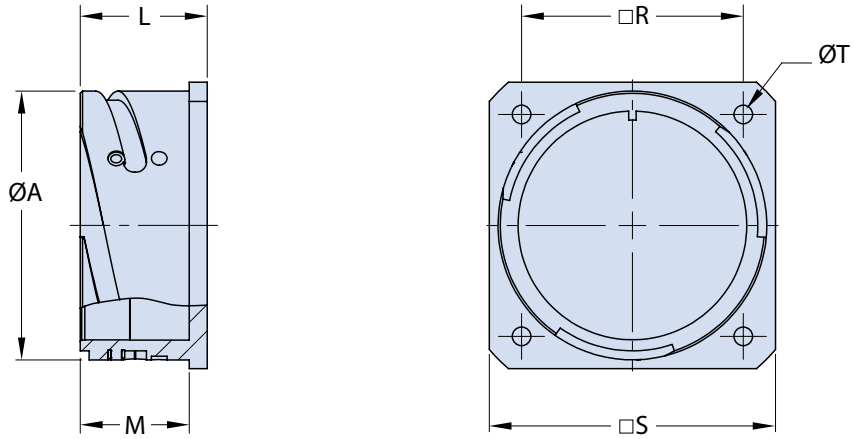

TABLE I: DUMMY PLUG RECEPTACLE SHELL SIZE & DIMENSIONS

Shell Size	ØA +0.2 -0.1	L Max.	M +0.2 0	R ±0.2	S ±0.2	T Threaded Holes	ØT +0.2 0
10 SL	18.2	21.6	18.4	18.25	25.4	M4	3.2
14 S	24.5	21.8	18.4	23.00	30.4	M4	3.2
16 S	27.2	21.8	18.4	24.60	32.5	M4	3.2
16	27.2	26.8	23.2	24.60	32.5	M4	3.2
18	30.7	27.6	23.2	27.00	35.0	M4	3.2
20	34.0	27.6	23.2	29.40	38.0	M4	3.2
22	37.3	27.6	23.2	31.75	41.0	M4	3.2
24	40.9	27.6	23.2	34.90	44.5	M4	3.7
28	46.7	28.6	24.2	39.70	50.9	M5	3.7
32	53.4	28.6	24.2	44.45	57.0	M5	4.3
36	59.6	28.6	24.2	49.20	63.5	M5	4.3
40	65.5	28.6	24.2	55.55	69.9	M5	4.3

TABLE II

STANDARD MATERIAL AND FINISH (*)		
Sym	**Description**	**RoHS**
	Omit for Aluminum/ Cadmium Olive Drab	
F6	Aluminum/ Black Electrodeposited Paint	✓
F7	Aluminum/ Black Zinc Nickel	✓
F11	Aluminum/ Electroless Nickel	✓
MB	Marine Bronze/ Unplated	✓
FK	Stainless Steel/ Passivate	✓

(*) For further options, please contact the factory.

Application Notes

1. Dummy receptacle for rear panel mounting rear side closed.
2. Standard materials configuration consists of aluminum alloy. For platings, see TABLE II finish options.

© 2015 Glenair, Inc. U.S. CAGE Code 06324 Printed in Italy

Downloaded from Arrow.com.

IT 40450-XX and IT 40450-XX S Connector Mounting Gaskets
for Front-Mounted Square Flange Receptacle

Basic Part Number and Shell Size Designator (Table I)

Material (Table II)

IT 40450 -XX S

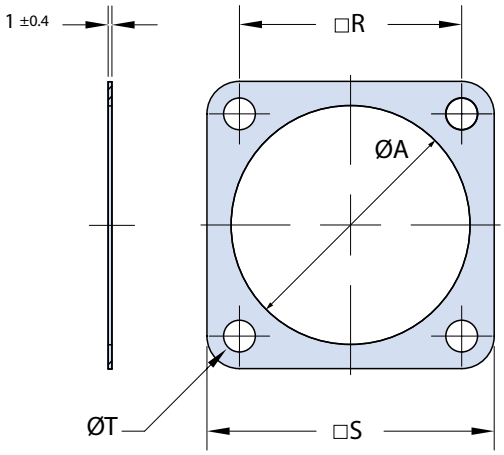

IT 40450-XX
Non-Conductive

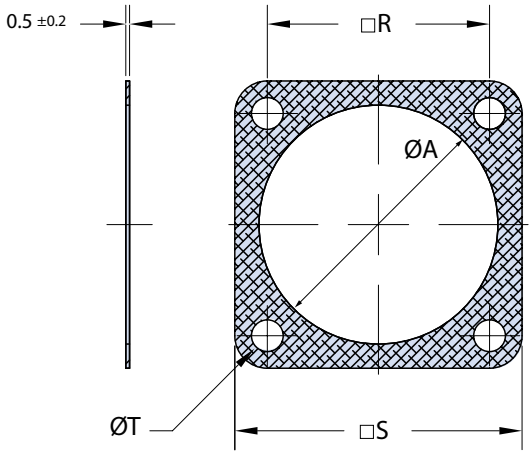

IT 40450-XXS
Conductive

D

TABLE I: CONDUCTIVE & NON-CONDUCTIVE FIXED CONNECTOR GASKETS

Part Number	Shell Size	ØA +0.3	R ±0.2	S ±0.5	ØT +0.5
IT 40450 - 10	10SL	15.7	18.2	25.4	4.2
IT 40450 - 14	14S	22.1	23.0	30.0	4.2
IT 40450 - 16	16S - 16	25.3	24.6	32.5	4.2
IT 40450 - 18	18	28.4	27.0	35.0	4.2
IT 40450 - 20	20	31.6	29.4	38.0	4.2
IT 40450 - 22	22	34.8	31.8	41.0	4.2
IT 40450 - 24	24	38.0	34.9	44.5	4.2
IT 40450 - 28	28	44.3	39.7	50.8	5.1
IT 40450 - 32	32	50.7	44.5	57.0	5.1
IT 40450 - 36	36	57.0	49.2	63.5	5.1
IT 40450 - 40	40	62.5	55.5	69.9	5.1

TABLE II

MATERIAL	
Sym	**Description**
	Omit for Neoprene
S	Wire Mesh in Neoprene Substrate (Conductive)
F	Fluorosilicone
V	Viton
Y	Silicone

Application Notes

1. Conductive and non-conductive gasket for front-mount square flange receptacles.

© 2015 Glenair, Inc. U.S. CAGE Code 06324 Printed in Italy

Downloaded from Arrow.com.

IT 40460-XX and IT 40460-XX S
Connector Mounting Gaskets
for Rear-Mounted Square Flange Receptacle

Glenair®

Basic Part Number and Shell Size Designator (Table I)

Material (Table II)

IT 40460 -XX S

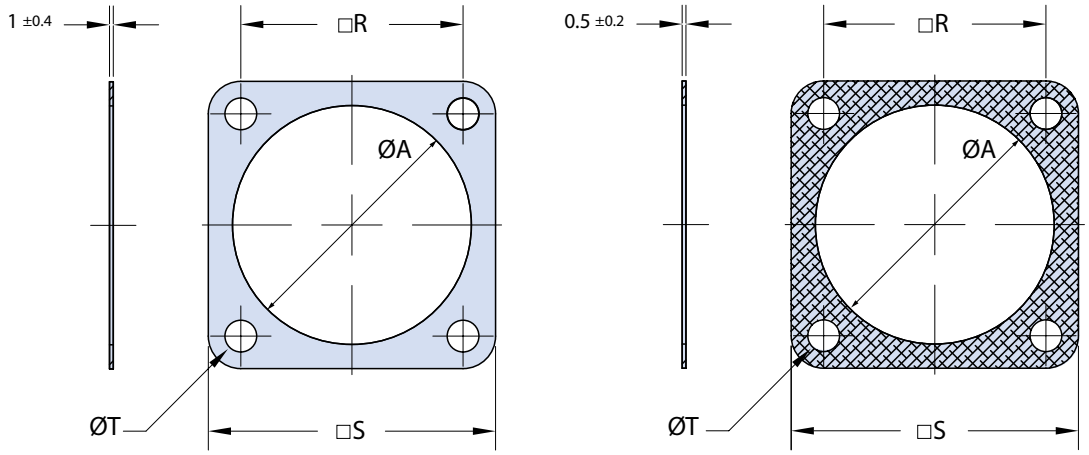

IT 40460-XX
Non-Conductive

IT 40460-XXS
Conductive

TABLE I: CONDUCTIVE & NON-CONDUCTIVE FIXED CONNECTOR GASKETS

Part Number	Shell Size	ØA +0.3	R ±0.2	S ±0.5	ØT +0.5
IT 40460 - 10	10SL	18.2	18.2	25.4	4.2
IT 40460 - 14	14S	24.6	23.0	30.0	4.2
IT 40460 - 16	16S - 16	27.4	24.6	32.5	4.2
IT 40460 - 18	18	30.8	27.0	35.0	4.2
IT 40460 - 20	20	34.2	29.4	38.0	4.2
IT 40460 - 22	22	37.4	31.8	41.0	4.2
IT 40460 - 24	24	40.9	34.9	44.5	4.2
IT 40460 - 28	28	46.7	39.7	50.8	5.1
IT 40460 - 32	32	53.4	44.5	57.0	5.1
IT 40460 - 36	36	59.6	49.2	63.5	5.1
IT 40460 - 40	40	65.5	55.5	69.9	5.1

TABLE II

MATERIAL	
Sym	**Description**
	Omit for Neoprene
S	Wire Mesh in Neoprene Substrate (Conductive)
F	Fluorosilicone
V	Viton
Y	Silicone

D

Application Notes

1. Conductive and non-conductive gasket for rear-mount square flange receptacles.

© 2015 Glenair, Inc. U.S. CAGE Code 06324 Printed in Italy

Downloaded from Arrow.com.

RUGGEDIZED
RJ45 AND USB
CONNECTORS

SUPERSEAL™

Glenair introduces the world's most comprehensive line of ruggedized RJ45 Ethernet and USB connectors in D38999 type, 5015 type and Series 80 Mighty Mouse packaging

Features

- Superior sealing—IP68 when mated—for complete system protection against water, sand and dust
- Shielded/grounded coupler designs in both receptacle and plug connectors
- Crimp, solder-cup, PC tail, and Quadrax contact/wire termination options
- RJ45 plug and/or jack interface options available in Cat 5e or Cat 6a in D38999 type and 5015 type packaging
- USB 2.0 and 3.0 in Series 80 Mighty Mouse, D38999 and 5015 type
- Intermateable, one-to-one equivalent solutions for other industry-standard commercial data interface field-duty connectors

SuperSeal™

Glenair®

Glenair, Inc.
1211 Air Way
Glendale, CA
91201-2497
818-247-6000
sales@glenair.com
www.glenair.com

Downloaded from Arrow.com.

PRODUCT FEATURES

- **Complete Assortment of Assembly Tools and Accessories**
- **Wire Sealing Plugs and Grommets**
- **Precision Machined Pin and Socket Crimp Contacts: Silver (Standard) and Gold**
- **Optional Coaxial Contacts**
- **Industry Standard Contact Insertion and Removal Tools**
- **Manual and Pneumatic Crimp Tools, Locators Dies and Turrets for All Contact and Wire Gauges**

Complete Convenience in MIL-DTL-5015 Type Connector Assembly: Every Contact, Tool and Accessory for the Job—No Gaps

One-Stop-Shopping

Glenair is pleased to offer our ruggedized power and signal connector customers complete convenience in assembly tool procurement for our Series ITS and other MIL-DTL-5015 type products. We selected the best available assembly tools and equipment for the job, including manual and pneumatic crimp tools, durable contact insertion and removal tools and all the smaller tools and accessories required for efficient assembly and termination of these crimp-contact environmental connectors.

Please note: Glenair Series ITS Connectors are supplied standard with silver plated contacts. For gold contacts or other product modifications, please contact the factory.

© 2015 Glenair, Inc. U.S. CAGE Code 06324 Printed in Italy

Downloaded from Arrow.com.

IT-305045-XX
Wire Hole Plug
for Contact Inserts

TABLE I: WIRE HOLE PLUG FOR CONTACT INSERTS PART NUMBERS, CONTACT SIZES, DIMENSIONS & COLOR

Part Number	Contact Size	ØA	ØB	C	L	Color
10 - 305045 - 16	16S - 16	2.6	2.2	3.2	15.7	Blue
10 - 101033 – 13	12	4.6	3.7	3.2	11.9	Giallo/Yellow
10 - 305045 - 8	8	7.6	6.4	3.1	11.8	White
10 - 305045 - 4	4	10.9	9.7	3.1	11.8	Green
10 - 305045 - 0	0	15.0	13.5	4.3	14.3	Black
10 - 305045 – 01	0M	16.0	14.5	4.3	14.5	Black

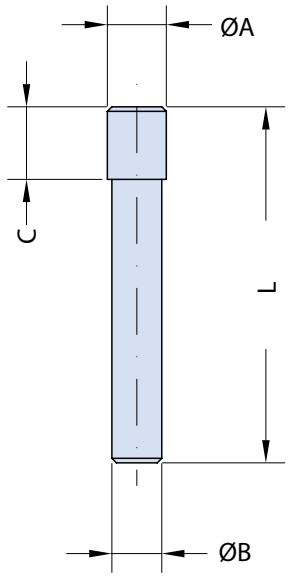

10-305045-16

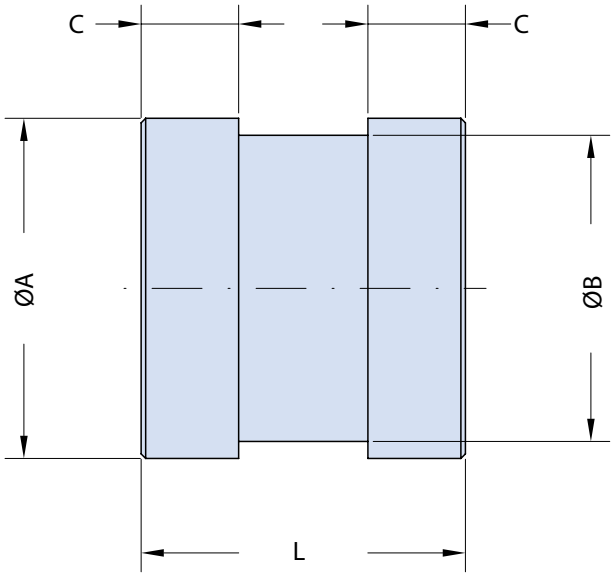

10-101033-13
10-305045-XX

Application Notes

Contact Hole Plug - Insert Version.
Used to fill an insert cavity in order to maintain the environmental seal when a cavity is without contact.

© 2015 Glenair, Inc. U.S. CAGE Code 06324 Printed in Italy

Downloaded from Arrow.com.

IT-101033-XX
Wire Hole Plug
for Wire Sealing Grommets

TABLE I: WIRE HOLE PLUG FOR WIRE SEALING GROMMETS PART NUMBERS, CONTACT SIZES, DIMENSIONS & COLOR

Part Number	Contact Size	ØA	ØB	C	L	Color
10 - 101033 - 12	16S - 16	3.7	2.8	3.2	11.9	Blu / Blue
10 - 101033 - 13	12	4.6	3.7	3.2	11.9	Giallo / Yellow
10 - 101033 - 14	8	5.8	5.0	3.2	11.9	Bianco / White
10 - 101033 - 15	4	8.5	7.6	3.2	11.9	Verde / Green
10 - 101033 - 16	0	13.5	12.8	3.2	11.9	Nero / Black

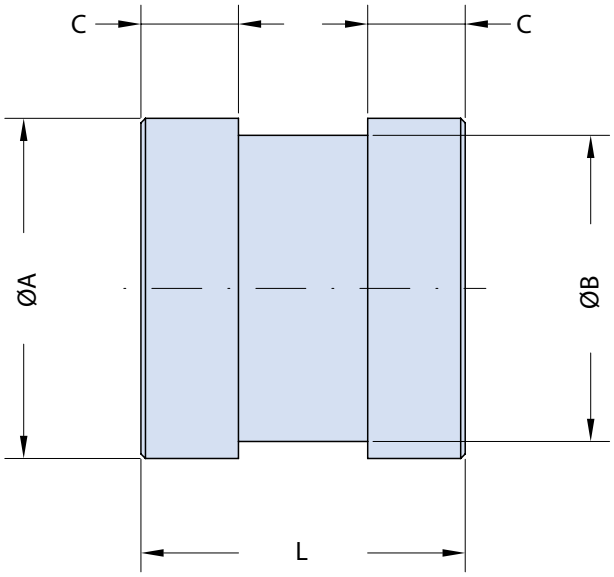

10-101033-XX

Application Notes

Contact Hole Plug - Grommet Version.
Used to fill a grommet cavity in order to maintain the environmental seal when a cavity is without contact.

© 2015 Glenair, Inc. U.S. CAGE Code 06324 Printed in Italy

Downloaded from Arrow.com.

ITS Bayonet Connector Assemblies
Pin Crimp Contacts

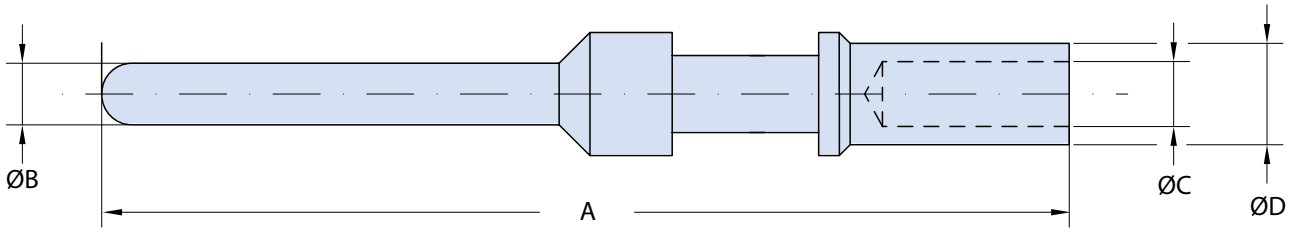

TABLE I: PIN CRIMP CONTACT PART NUMBERS, SIZE & DIMENSIONS

Part number	Contact Size	A		ØB		ØC		ØD		Wire Size	
		mm	Inches	mm	Inches	mm	Inches	mm	Inches	mm²	AWG
10-375-20	20	24,30	0,957	1,00	0,039	1,30	0,051	1,93	0,076	0,15-0,6	26÷20
10-40579	18	29,60	1,165	1,40	0,055	1,30	0,051	1,93	0,076	0,15÷0,6	26÷20
10-40553	16S	26,60	1,047	1,58	0,062	1,70	0,067	2,60	0,102	1÷1,5	18÷16
10-40553-12	16S	26,60	1,047	1,58	0,062	1,19	0,047	2,59	0,102	0.6	20
10-40553-13*	16S	26,60	1,047	1,58	0,062	1,30	0,051	1,93	0,076	0,15÷0,6	26÷20
10-40553-15*	16S	26,60	1,047	1,58	0,062	1,50	0,059	2,60	0,102	0,75-1,0	18
10-40553-20	16S	26,60	1,047	1,58	0,062	2,00	0,079	2,90	0,114	2	14
10-40553-26	16S	26,60	1,047	1,58	0,062	2,5	0,098	3,8	0,150	2,5-3,0	12
10-40557	16	31,75	1,250	1,58	0,062	1,70	0,067	2,60	0,102	1÷1,5	18÷16
10-40557L	16	33,25	1,309	1,58	0,062	1,70	0,067	2,60	0,102	1÷1,5	18÷16
10-40557-08*	16	31,75	1,250	1,58	0,062	0,85	0,033	1,55	0,061	0,15÷0,2	26÷24
10-40557-12*	16	31,75	1,250	1,58	0,062	1,20	0,047	2,60	0,102	0,6	20
10-40557-13*	16	31,75	1,250	1,58	0,062	1,30	0,051	1,93	0,076	0,15÷0,6	26÷20
10-40557-15*	16	31,75	1,250	1,58	0,062	1,50	0,059	2,60	0,102	0,75-1,0	18
10-40557-20**	16	31,75	1,250	1,58	0,062	2,00	0,079	2,90	0,114	2	14
10-40557-22**	16	31,75	1,250	1,57	0,062	2,2	0,087	3,8	0,150	2,5	/
10-40557-22L**	16	33,25	1,309	1,57	0,062	2,2	0,087	3,8	0,150	2,5	/
10-40557-26**	16	31,75	1,250	1,58	0,062	2,5	0,098	3,8	0,150	2,5-3,0	12
10-40557-32*	16	31,75	1,250	1,58	0,062	0,45	0,018	1,95	0,077	/	32÷28
10-40561	12	37,65	1,482	2,38	0,094	2,50	0,098	3,90	0,154	2,5-3,0	12
10-40561-12*	12	37,65	1,482	2,38	0,094	1,20	0,047	2,60	0,102	0,6	20
10-40561-15*	12	37,65	1,482	2,38	0,094	1,50	0,059	2,60	0,102	0,75-1,0	18
10-40561-177*	12	37,65	1,482	2,38	0,094	1,77	0,070	2,75	0,108	1,5	18-16
10-40561-20*	12	37,65	1,482	2,38	0,094	2,00	0,079	3,90	0,154	2	14
10-40561-22*	12	37,65	1,482	2,38	0,094	2,10	0,083	3,90	0,154	2,5	/
10-40561-30**	12	37,65	1,482	2,38	0,094	3,00	0,118	4,80	0,189	4-5	/
10-40561-30M**	12	37,65	1,482	2,38	0,094	3,30	0,130	4,20	0,165	4	/
10-40561-38**	12	37,65	1,482	2,38	0,094	3,60	0,142	4,8	0,268	6	10

Please consult our sales department for other contacts or crimp tooling details.

PLATING OPTIONS

G10 : Silver (Standard)

G117 : Gold

Note

*These contacts accept smaller wire than standard ones. There may be a sealing problem with grommets. The max current rating is limited by the wire max current rating.

** These contacts accept larger wires than standard ones. The reduced air/creepage distance may worsen the service rating and there may be difficulties with grommets. The max current rating is limited by the contact max current rating. See page A-5.

Please contact factory for solutions.

© 2015 Glenair, Inc. U.S. CAGE Code 06324 Printed in Italy

GLENAIR, INC. • 1211 AIR WAY • GLENDALE, CA 91201-2497 • 818-247-6000 • FAX 818-500-9912
www.glenair.com

E-Mail: sales@glenair.com

Downloaded from Arrow.com.

ITS Bayonet Connector Assemblies
Pin Crimp Contacts

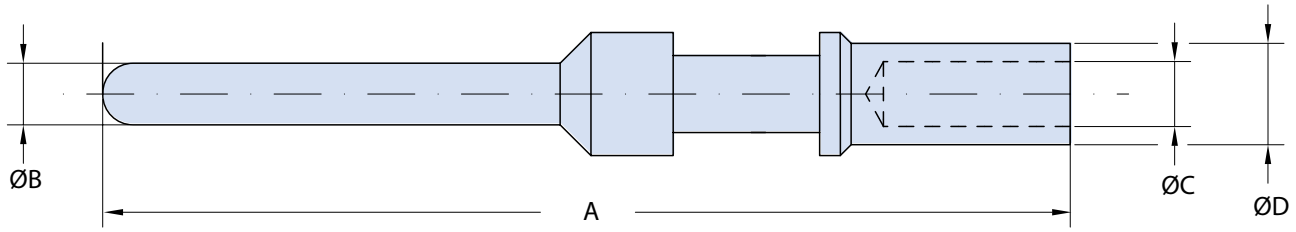

TABLE I: PIN CRIMP CONTACT PART NUMBERS, SIZE & DIMENSIONS

Part number	Contact Size	A		ØB		ØC		ØD		Wire Size	
		mm	Inches	mm	Inches	mm	Inches	mm	Inches	mm²	AWG
10-40792	8	42,00	1,654	3,60	0,142	4,50	0,177	6,90	0,272	9	8
10-40792-15*	8	42,00	1,654	3,60	0,142	1,50	0,059	3,40	0,134	0,75-1,0	18
10-40792-18*	8	42,00	1,654	3,60	0,142	1,80	0,071	3,80	0,150	1÷2	18÷14
10-40792-20*	8	42,00	1,654	3,60	0,142	2,00	0,079	3,80	0,150	2	14
10-40792-26*	8	42,00	1,654	3,60	0,142	2,5	0,098	3,8	0,150	2,5-3,0	12
10-40792-30*	8	42,00	1,654	3,60	0,142	3,00	0,118	4,80	0,189	4-5	/
10-40792-38*	8	42,00	1,654	3,60	0,142	3,60	0,142	6,80	0,268	6	10
10-40792-50**	8	42,00	1,654	3,60	0,142	5,00	0,197	6,90	0,272	10	/
10-40792-58**	8	42,00	1,654	3,60	0,142	5,80	0,228	7,80	0,307	13,2	6
10-113474-4P	4	42,00	1,654	5,70	0,224	7,10	0,280	9,53	0,375	22-25	4
10-113474-4P-22*	4	42,00	1,654	5,70	0,224	2,20	0,087	3,80	0,150	2,5	/
10-113474-4P-25	Replaced by 10-113474-4P										
10-113474-4P-26*	4	42,00	1,654	5,70	0,224	2,50	0,098	3,80	0,150	2,5-3,0	12
10-113474-4P-30*	4	42,00	1,654	5,70	0,224	3,00	0,118	4,80	0,189	4-5	/
10-113474-4P-38*	4	42,00	1,654	5,70	0,224	3,60	0,142	6,80	0,268	6	10
10-113474-4P-50*	4	42,00	1,654	5,70	0,224	5,00	0,197	7,00	0,276	10	/
10-113474-4P-58*	4	42,00	1,654	5,70	0,224	5,80	0,228	7,80	0,307	13,2	6
10-113474-4P-62*	4	42,00	1,654	5,70	0,224	6,20	0,244	9,53	0,375	16	/
10-113474-1P	0	45,00	1,772	9,05	0,356	11,50	0,453	14,30	0,563	50-60	0
10-113474-1P-107*	0	45,00	1,772	9,05	0,356	10,70	0,421	14,35	0,565	50	/
10-113474-1P-72*	0	45,00	1,772	9,05	0,356	7,15	0,281	9,50	0,374	22-25	4
10-113474-1P-35*	0	45,00	1,772	9,05	0,356	9,00	0,354	14,35	0,565	35	/
10-113474-1P-45*	0	45,00	1,772	9,05	0,356	4,55	0,179	6,80	0,268	9	8
10-113474-1P-50*	0	45,00	1,772	9,05	0,356	5,00	0,197	7,00	0,276	10	/
10-113474-1P-58*	0	45,00	1,772	9,05	0,356	5,80	0,228	7,80	0,307	13,2	6
10-113474-1P-62*	0	45,00	1,772	9,05	0,356	6,20	0,244	9,50	0,374	16	/
10-113474-0P*	4/0	63,00	2,480	12,69	0,500	16,5	0,650	20	0,787	107	4/0
10-113474-0P-78*	4/0	63,00	2,480	12,69	0,500	7,10	0,280	9,53	0,375	22-25	4
10-113474-0P-107*	4/0	63,00	2,480	12,69	0,500	10,7	0,421	14,35	0,565	50	/
10-113474-0P-144*	4/0	63,00	2,480	12,69	0,500	14,5	0,571	20	0,787	70	/

Please consult our sales department for other contacts or crimp tooling details.

PLATING OPTIONS

G10 : Silver (Standard)

G117 : Gold

Note

*These contacts accept smaller wire than standard ones. There may be a sealing problem with grommets. The max current rating is limited by the wire max current rating.

** These contacts accept larger wires than standard ones. The reduced air/creepage distance may worsen the service rating and there may be difficulties with grommets. The max current rating is limited by the contact max current rating. See page A-5.

Please contact factory for solutions.

© 2015 Glenair, Inc. U.S. CAGE Code 06324 Printed in Italy

GLENAIR, INC. • 1211 AIR WAY • GLENDALE, CA 91201-2497 • 818-247-6000 • FAX 818-500-9912
www.glenair.com

E-Mail: sales@glenair.com

Downloaded from Arrow.com.

ITS Bayonet Connector Assemblies
Socket Crimp Contacts

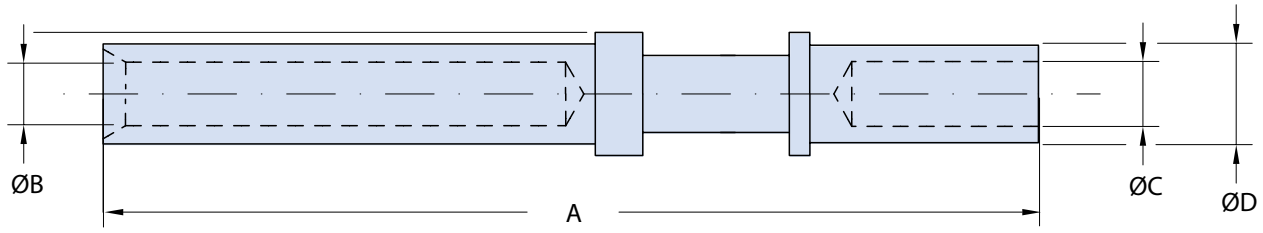

TABLE I: SOCKET CRIMP CONTACT PART NUMBERS, SIZE & DIMENSIONS

Part number	Contact Size	A		ØB		ØC		ØD		Wire Size	
		mm	Inches	mm	Inches	mm	Inches	mm	Inches	mm²	AWG
10-40520LC	20	36,5	1,437	1,08	0,043	1,3	0,051	1,93	0,076	0,15-0,6	26-20
10-40588	18	34,4	1,354	1,46	0,057	1,3	0,051	1,93	0,076	0,15-0,6	26-20
10-40552	16S	26,6	1,047	1,65	0,065	1,7	0,067	2,60	0,102	1-1,5	18-16
10-40552-12*	16S	26,6	1,047	1,65	0,065	1,2	0,047	2,60	0,102	0,6	20
10-40552-13*	16S	26,6	1,047	1,65	0,065	1,3	0,051	1,93	0,076	0,15-0,6	26-20
10-40552-15*	16S	26,6	1,047	1,65	0,065	1,5	0,059	2,60	0,102	0,75-1	18
10-40552-20**	16S	26,6	1,047	1,65	0,065	2,0	0,079	2,90	0,114	2	14
10-40552-26**	16S	26,6	1,047	1,65	0,065	2,5	0,098	3,80	0,150	2,5-3,0	12
10-40556	16	36,5	1,437	1,65	0,065	1,7	0,067	2,60	0,102	1-1,5	18-16
10-40556-08*	16	36,5	1,437	1,65	0,065	0,85	0,033	1,55	0,061	0,15-0,2	26-24
10-40556-12*	16	36,5	1,437	1,65	0,065	1,2	0,047	2,60	0,102	0,6	20
10-40556-13*	16	36,5	1,437	1,65	0,065	1,3	0,051	1,93	0,076	0,15-0,6	26-20
10-40556-15*	16	36,5	1,437	1,65	0,065	1,45	0,057	2,60	0,102	0,75-1	18
10-40556-20**	16	36,5	1,437	1,65	0,065	2,0	0,079	2,90	0,114	2	14
10-40556-22**	16	36,5	1,437	1,65	0,065	2,2	0,087	3,8	0,150	2,5	/
10-40556-26**	16	36,5	1,437	1,65	0,065	2,5	0,098	3,80	0,150	2,5-3,0	12
10-40556-32*	16	36,5	1,437	1,65	0,065	0,45	0,018	1,95	0,077	/	32-28
10-40560	12	37,65	1,482	2,48	0,098	2,5	0,098	3,9	0,154	2,5-3,0	12
10-40560-12*	12	37,65	1,482	2,48	0,098	1,2	0,047	2,6	0,102	0,6	20
10-40560-15*	12	37,65	1,482	2,48	0,098	1,45	0,057	2,60	0,102	0,75-1	18
10-40560-177*	12	37,65	1,482	2,48	0,098	1,77	0,070	2,75	0,108	1,5	18-16
10-40560-20*	12	37,65	1,482	2,48	0,098	2,0	0,079	3,8	0,150	2	14
10-40560-22*	12	37,65	1,482	2,48	0,098	2,1	0,083	3,8	0,150	2,5	/
10-40560-30**	12	37,65	1,482	2,38	0,094	3,00	0,118	4,80	0,189	4-5	/
10-40560-30M**	12	37,65	1,482	2,38	0,094	3,30	0,130	4,20	0,165	4	/
10-40560-38**	12	37,65	1,482	2,38	0,094	3,60	0,142	4,80	0,189	6	10

Please consult our sales department for other contacts or crimp tooling details.

PLATING OPTIONS

G10 : Silver (Standard)

G117 : Gold

Note

*These contacts accept smaller wire than standard ones. There may be a sealing problem with grommets. The max current rating is limited by the wire max current rating.

** These contacts accept larger wires than standard ones. The reduced air/creepage distance may worsen the service rating and there may be difficulties with grommets. The max current rating is limited by the contact max current rating. See page A-5.

Please contact factory for solutions.

© 2015 Glenair, Inc. U.S. CAGE Code 06324 Printed in Italy

Downloaded from Arrow.com.

ITS Bayonet Connector Assemblies
Socket Crimp Contacts

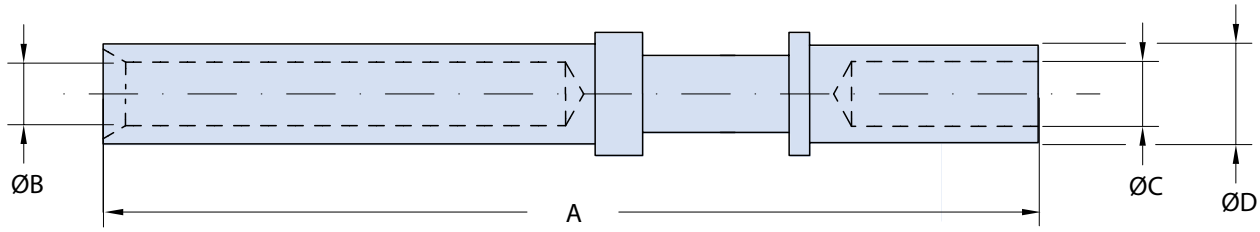

TABLE I: SOCKET CRIMP CONTACT PART NUMBERS, SIZE & DIMENSIONS

Part number	Contact Size	A		ØB		ØC		ØD		Wire Size	
		mm	Inches	mm	Inches	mm	Inches	mm	Inches	mm²	AWG
10-40793-1	8	40,5	1,594	3,70	0,146	4,5	0,177	6,75	0,266	9	8
10-40793-1-15*	8	40,5	1,594	3,70	0,146	1,45	0,057	3,4	0,134	0,75-1	18
10-40793-1-18*	8	40,5	1,594	3,70	0,146	1,8	0,071	3,8	0,150	1-2	18-14
10-40793-1-20*	8	40,5	1,594	3,60	0,142	2,00	0,079	3,80	0,150	2	14
10-40793-1-26*	8	40,5	1,594	3,70	0,146	2,5	0,098	3,8	0,150	2,5-3,0	12
10-40793-1-30*	8	40,5	1,594	3,70	0,146	3,0	0,118	4,8	0,189	4-5	/
10-40793-1-38*	8	40,5	1,594	3,70	0,146	3,6	0,142	6,8	0,268	6	10
10-40793-1-50**	8	40,5	1,594	3,70	0,146	5,0	0,197	6,9	0,272	10	/
10-40793-1-58**	8	40,5	1,594	3,70	0,146	5,8	0,228	7,8	0,307	13,2	6
10-113474-4S-1	4	41,0	1,614	5,80	0,228	7,1	0,280	9,53	0,375	22-25	4
10-113474-4S-1-22*	4	41,0	1,614	5,80	0,228	2,2	0,087	3,8	0,150	2,5	/
10-113474-4S-1-25	Replaced by 10-113474-4S-1										
10-113474-4S-1-26*	4	41,0	1,614	5,80	0,228	2,5	0,098	3,8	0,150	2,5-3,0	12
10-113474-4S-1-30*	4	41,0	1,614	5,80	0,228	3,0	0,118	4,8	0,189	4-5	/
10-113474-4S-1-38*	4	41,0	1,614	5,80	0,228	3,6	0,142	6,8	0,268	6	10
10-113474-4S-1-50*	4	41,0	1,614	5,80	0,228	5,0	0,197	7,0	0,276	10	/
10-113474-4S-1-58*	4	41,0	1,614	5,80	0,228	5,8	0,228	7,8	0,307	13,2	6
10-113474-4S-1-62*	4	41,0	1,614	5,80	0,228	6,2	0,244	9,5	0,374	16	/
10-113474-1S	0	44,6	1,756	9,17	0,361	11,5	0,453	14,3	0,563	50-60	0
10-113474-1S-107*	0	44,6	1,756	9,17	0,361	10,7	0,421	14,35	0,565	50	/
10-113474-1S-72*	0	44,6	1,756	9,17	0,361	7,15	0,281	9,5	0,374	22-25	4
10-113474-1S-35*	0	44,6	1,756	9,17	0,361	9,0	0,354	14,35	0,565	35	/
10-113474-1S-45*	0	44,6	1,756	9,17	0,361	4,55	0,179	6,8	0,268	9	8
10-113474-1S-50*	0	44,6	1,756	9,17	0,361	5,0	0,197	7,0	0,276	10	/
10-113474-1S-58*	0	44,6	1,756	9,17	0,361	5,8	0,228	7,8	0,307	13,2	6
10-113474-1S-62*	0	45,3	1,783	9,17	0,361	6,2	0,244	9,5	0,374	16	/
10-113474-0S	4/0	65,9	2,594	12,7	0,500	16,5	0,650	20	0,787	107	4/0
10-113474-0S-78*	4/0	65,9	2,594	12,7	0,500	7,15	0,281	9,5	0,374	22-25	4
10-113474-0S-107*	4/0	65,9	2,594	12,7	0,500	10,7	0,421	14,35	0,565	50	/
10-113474-0S-144*	4/0	65,9	2,594	12,7	0,500	14,5	0,571	20	0,787	70	/

Please consult our sales department for other contacts or crimp tooling details.

PLATING OPTIONS

G10 : Silver (Standard)

G117 : Gold

Note

*These contacts accept smaller wire than standard ones. There may be a sealing problem with grommets. The max current rating is limited by the wire max current rating.

** These contacts accept larger wires than standard ones. The reduced air/creepage distance may worsen the service rating and there may be difficulties with grommets. The max current rating is limited by the contact max current rating. See page A-5.

Please contact factory for solutions.

© 2015 Glenair, Inc. U.S. CAGE Code 06324 Printed in Italy

GLENAIR, INC. • 1211 AIR WAY • GLENDALE, CA 91201-2497 • 818-247-6000 • FAX 818-500-9912
www.glenair.com

E-Mail: sales@glenair.com

Downloaded from Arrow.com.

ITS Bayonet Connector Assemblies
Louver Band Socket Contacts

These contacts series are precision-machined using high conductivity copper alloy. A stamped and formed spring ("louverband") is installed into the socket contact. The spring is made from 6 mil beryllium copper (BeCu). Testing has demonstrated that this contact system outperforms conventional aerospace-grade contact systems. The louverband spring provides many points of electrical contact with the mating pin, as opposed to a few "high spots" on a conventional four-finger contact as shown in Fig. 2. The louverband design offers lower voltage drop for reduced temperature rise and higher current carrying capacity. In addition to its electrical advantages, the louverband also is mechanically superior to four-finger contacts. The louverband spring has consistent, stable normal force, even when subjected to thousands of mating cycles and temperature extremes.

Figure 1. LouverBand Socket Contact

Figure 2. Conventional Contact on the left, LouverBand Contact on the right

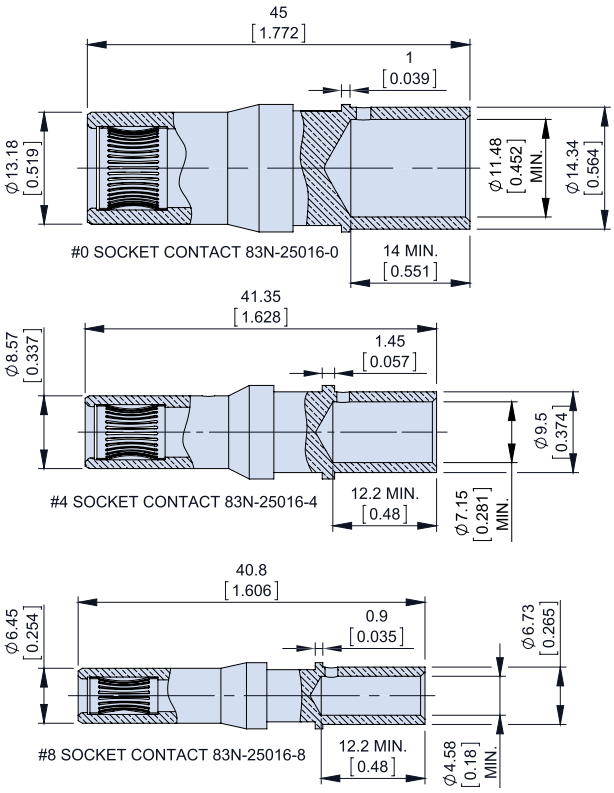

Size	Wire Size	Part Number
0	#0	83N-25016-0G10-L
4	#4	83N-25016-4G10-L
8	#8	83N-25016-8G10-L

Contact Size	Current Rating		Contact Resistance (mΩ Max.)	Min Separation Force (ounces) min Diameter SAE-AS31971 pin	Max Average Engagement Force (ounces) Max Diameter SAE-AS31971 pin
	Rated current at +20°C (Ampere)	Rated current at +80°C (Ampere)			
0	300	250	0.2	15	320
4	160	130	0.5	10	240
8	90	70	1	5	160

© 2015 Glenair, Inc. U.S. CAGE Code 06324 Printed in Italy

Downloaded from Arrow.com.

ITS Bayonet Connector Assemblies
Reducers

For crimp contacts are available special reducers in order to accomodate a smaller wire size in a contact. The reducer is fully inserted into the wire barrell, then the crimping of the wire can be performed.

AWG4 to AWG8 reducer

Size 4 contact with AWG4 wire barrell

Size 4 contact with AWG8 reducer

Part Number	Contact Size	From wire size	To wire size
10-869-20A-26AG117	20	AWG 20	AWG 26
10-869-16A-22AG10	16	AWG 16	AWG 22
10-869-16A-20AG10	16	AWG 16	AWG 20
10-869-12A-26AG10	12	AWG 12	AWG 26
10-869-12A-20AG10	12	AWG 12	AWG 20
10-869-12A-16AG10	12	AWG 12	AWG 16
10-869-8A-18AG10	8	AWG 8	AWG 18
10-869-8A-16AG10	8	AWG 8	AWG 16
10-869-8A-14AG10	8	AWG 8	AWG 14
10-869-8A-12AG10	8	AWG 8	AWG 12
10-869-8A-10AG10	8	AWG 8	AWG 10
10-869-8A-2.5MG10	8	AWG 8	2,5 mm2
10-869-8A-6MG10	8	AWG 8	6 mm2
10-869-4A-8AG10	4	AWG 4	AWG 8
10-869-4A-6AG10	4	AWG 4	AWG 6
10-869-4A-16MG10	4	AWG 4	16 mm2
10-869-4A-10MG10	4	AWG 4	10 mm2
10-869-4A-6MG10	4	AWG 4	6 mm2
10-869-4A-2.5MG10	4	AWG 4	2,5 mm2
10-869-0A-6AG10	0	AWG 0	AWG 6
10-869-0A-2AG10	0	AWG 0	AWG 2
10-869-0A-50MG10	0	AWG 0	50 mm2
10-869-0A-35MG10	0	AWG 0	35 mm2
10-869-0A-25MG10	0	AWG 0	25 mm2
10-869-0A-16MG10	0	AWG 0	16 mm2
10-869-0A-10MG10	0	AWG 0	10 mm2
10-869-4/0A-70MG10	4/0	AWG 4/0	70 mm2

Please consult our Sales Department for other options.

© 2015 Glenair, Inc.

Downloaded from Arrow.com.

CC 700XX
ITS Bayonet Connector Assemblies
Size 8 Coaxial Pin and Socket Contacts

COAXIAL PIN CONTACT

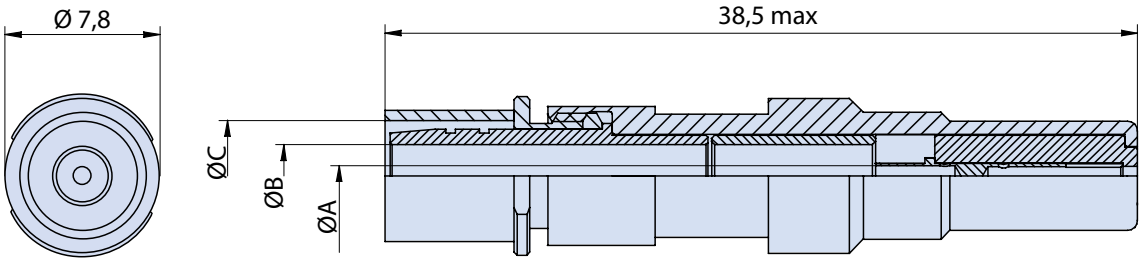

COAXIAL SOCKET CONTACT

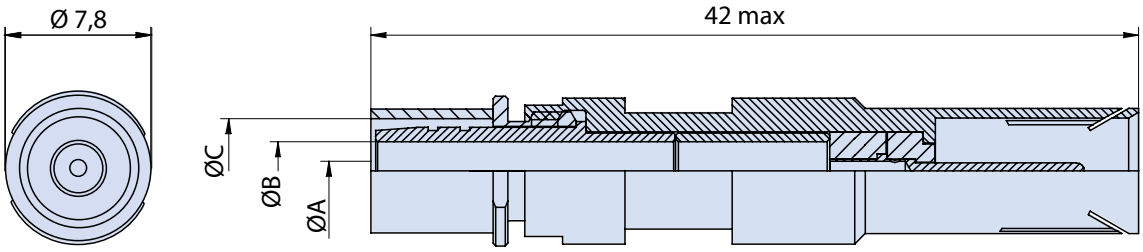

TABLE I: COAXIAL PIN & SOCKET CONTACT PART NUMBERS, CABLE INFORMATION AND DIMENSIONS

Pin P/N	Socket P/N	Used with Cable	Ø A	Ø B	Ø C
CC 70038	CC 70040	RG 58	1.05	3.15	5.23
CC 70046	CC 70042	RG 59	0.75	3,90	5,60
CC 70054	CC 70052	RG 179	0.55	1,70	3,10
CC 70056	CC 70058	RG 174 / RG 316	0.75	1,70	3,10
CC 70060	CC 70062	RG 142	1.05	3.15	5,60
CC 70064	CC 70066	RG 223	1.05	3.15	5,90

COAXIAL INSERTION AND EXTRACTION TOOL - SIZE 8

P/N : M.118260/C

Insertion and Extraction Tool for COAX Contacts Size 8

© 2015 Glenair, Inc. U.S. CAGE Code 06324 Printed in Italy

Downloaded from Arrow.com.

CC 700XX
ITS Bayonet Connector Assemblies
Coaxial Contacts Assembly

COAXIAL CONTACTS ASSEMBLY

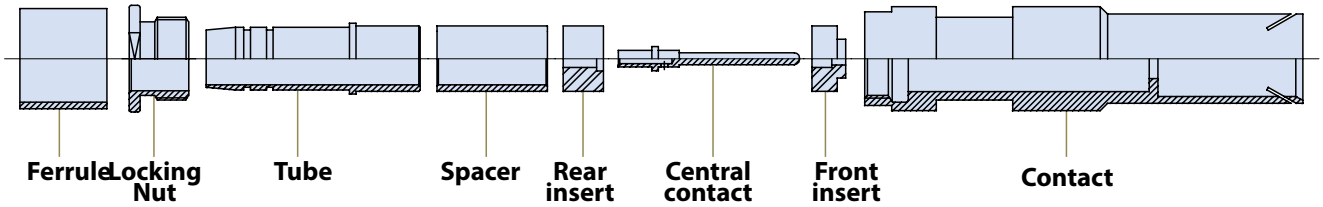

1 – Strip the cable according to the following dimensions

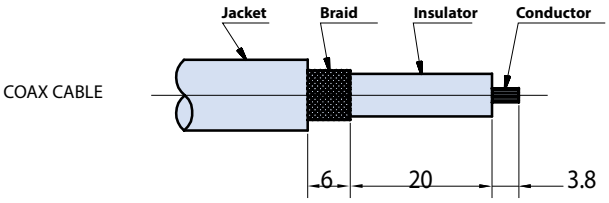

2 – Solder the central contact with the conductor of the coax cable after having pre-tinned the hole of the contact and the conductor, too

3 – Place the ferrule on the braid

4 – Place the locking nut on the tube and then this one on the insulator, then insert the tube under the braid

5 – Crimp the ferrule on the braid using the follow tools:

Crimping tool:	M22520 / 5-01
Die assy for RG58:	M22520 / 5-05 A
Die assy for RG59:	M22520 / 5-45 B
Die assy for RG142:	M22520 / 5-45 B
Die assy for RG174:	M22520 / 5-08 A
Die assy for RG179:	M22520 / 5-08 A
Die assy for RG223:	M22520 / 5-45 A

Note: the nut has to remain free to rotate

6 – Withdraw the spacer on the insulator till it stops against the tube

7 – Place the rear insert on the central contact by the cut on the side

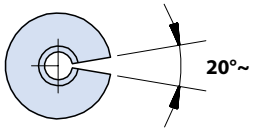

8 – Place the front insert on the central contact and insert everything inside the contact lightly pressing the rear insert; then screw the nut and the contact together.

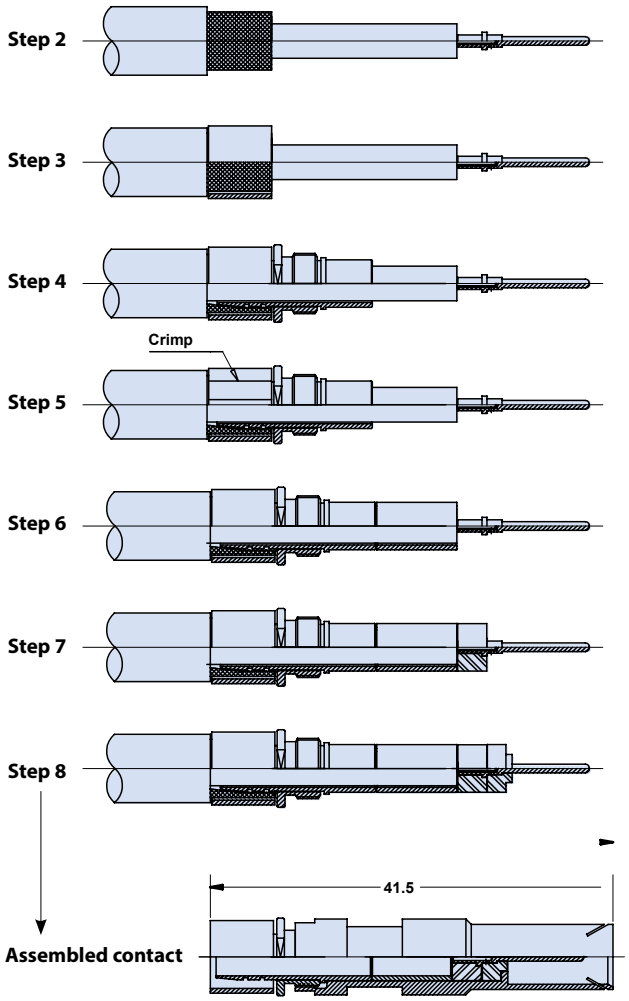

© 2015 Glenair, Inc. U.S. CAGE Code 06324 Printed in Italy

Downloaded from Arrow.com.

ITS Bayonet Connector Assemblies
Pin Crimp Contacts
Insertion and Removal Tools

TABLE I: INSERTION AND REMOVAL TOOLS PART NUMBERS, SIZE & DIMENSIONS

PART NUMBER	CONTACT SIZE	WIRE SIZE		INSERTION TOOL	REMOVAL TOOL
		mm²	AWG	Glenair P/N	Glenair P/N
10-375-20	20	0,15-0,6	26÷20	M.117346	M.118251
10-40579	18	0,15÷0,6	26÷20	M.117346	M.118249
10-40553	16S	1÷1,5	18÷16	M.117083	M.118250
10-40553-12	16S	0.6	20	M.117083	M.118250
10-40553-13	16S	0,15÷0,6	26÷20	M.117346	M.118250
10-40553-15	16S	0,75-1,0	18	M.117083	M.118250
10-40553-20	16S	1-2	14	M.117083	M.118250
10-40553-26	16S	2,5-3,0	12	M.117082	M.118250
10-40557	16	1÷1,5	18÷16	M.117083	M.118250
10-40557L	16	1÷1,5	18÷16	M.117083	M.118250
10-40557-08	16	0,15÷0,2	26÷24	M.117346	M.118250
10-40557-12	16	0,6	20	M.117083	M.118250
10-40557-13	16	0,15÷0,6	26÷20	M.117346	M.118250
10-40557-15	16	0,75-1,0	18	M.117083	M.118250
10-40557-20	16	1-2	14	M.117083	M.118250
10-40557-22	16	2,5	/	M.117083	M.118250
10-40557-22L	16	2,5	/	M.117083	M.118250
10-40557-26	16	2,5-3,0	12	M.117083	M.118250
10-40557-32	16	/	32÷28	M.117083	M.118250
10-40561	12	2,5-3,0	12	M.117082	M.118250
10-40561-12	12	0,6	20	M.117083	M.118250
10-40561-15	12	0,75-1,0	18	M.117083	M.118250
10-40561-177	12	1,5	18-16	M.117082	M.118250
10-40561-20	12	2	14	M.117082	M.118250
10-40561-22	12	2,5	/	M.117082	M.118250
10-40561-30	12	4-5	/	M.117082	M.118250
10-40561-30M	12	4	/	M.117082	M.118250
10-40561-38	12	6	10	M.117082	M.118250

Please consult our sales department for other contact options or crimp tooling details.

Insertion Tool

Removal Tool

© 2015 Glenair, Inc. U.S. CAGE Code 06324 Printed in Italy

Downloaded from Arrow.com.

TABLE I: INSERTION AND REMOVAL TOOLS PART NUMBERS, SIZE & DIMENSIONS

PART NUMBER	CONTACT SIZE	WIRE SIZE		INSERTION TOOL	REMOVAL TOOL
		mm²	AWG	Glenair P/N	Glenair P/N
10-40792	8	9	8	M.117344	M.118260
10-40792-15	8	0,75-1,0	18	M.117082	M.118260
10-40792-18	8	1÷2	18÷14	M.117082	M.118260
10-40792-20	8	2	14	M.117082	M.118260
10-40792-26	8	2,5-3,0	12	M.117082	M.118260
10-40792-30	8	4-5	/	M.117082	M.118260
10-40792-38	8	6	10	M.117344	M.118260
10-40792-50	8	10	/	M.117344	M.118260
10-40792-58	8	13,2	6	M.117344	M.118260
10-113474-4P	4	25	4	M.117347	M.118270
10-113474-4P-22	4	2,5	/	M.117082	M.118270
10-113474-4P-26	4	2,5-3,0	12	M.117082	M.118270
10-113474-4P-30	4	4-5	/	M.117082	M.118270
10-113474-4P-38	4	6	10	M.117344	M.118270
10-113474-4P-50	4	10	/	M.117344	M.118270
10-113474-4P-58	4	13,2	6	M.117344	M.118270
10-113474-4P-62	4	16	/	M.117347	M.118270
10-113474-1P	0	50-60	0	M.117348	M.118280
10-113474-1P-107	0	50	/	M.117348	M.118280
10-113474-1P-72	0	22-25	4	M.117347	M.118280
10-113474-1P-35	0	35	/	M.117348	M.118280
10-113474-1P-45	0	9	8	M.117344	M.118280
10-113474-1P-50	0	10	/	M.117344	M.118280
10-113474-1P-58	0	13,2	6	M.117344	M.118280
10-113474-1P-62	0	16	/	M.117347	M.118280
10-113474-0P	4/0	107	4/0	/	/
10-113474-0P-78	4/0	25	/	/	/
10-113474-0P-107	4/0	50	/	/	/
10-113474-0P-144	4/0	70	/	/	/

Please consult our sales department for other contact options or crimp tooling details.

Insertion Tool

Removal Tool

© 2015 Glenair, Inc. U.S. CAGE Code 06324 Printed in Italy

Downloaded from Arrow.com.

ITS Bayonet Connector Assemblies
Socket Crimp Contacts
Insertion and Removal Tools

TABLE I: INSERTION AND REMOVAL TOOLS PART NUMBERS, SIZE & DIMENSIONS

PART NUMBER	CONTACT SIZE	WIRE SIZE		INSERTION TOOL	REMOVAL TOOL	GUIDE PIN
		mm²	AWG	Glenair P/N	Glenair P/N	
10-40520LC	20	0,15-0,6	26-20	M.117346	M.118251	M.125007
10-40588	18	0,15-0,6	26-20	M.117346	M.118249	M.125000
10-40552	16S	1-1,5	18-16	M.117083	M.118250	M.125001
10-40552-12	16S	0,6	20	M.117083	M.118250	M.125001
10-40552-13	16S	0,15-0,6	26-20	M.117346	M.118250	M.125001
10-40552-15	16S	0,75-1	18	M.117083	M.118250	M.125001
10-40552-20	16S	1-2	14	M.117083	M.118250	M.125001
10-40552-26	16S	2,5-3,0	12	M.117082	M.118250	M.125001
10-40556	16	1-1,5	18-16	M.117083	M.118250	M.125001
10-40556-08	16	0,15-0,2	26-24	M.117346	M.118250	M.125001
10-40556-12	16	0,6	20	M.117083	M.118250	M.125001
10-40556-13	16	0,15-0,6	26-20	M.117346	M.118250	M.125001
10-40556-15	16	0,75-1	18	M.117083	M.118250	M.125001
10-40556-20	16	1-2	14	M.117083	M.118250	M.125001
10-40556-22	16	2,5	/	M.117083	M.118250	M.125001
10-40556-26	16	2,5-3,0	12	M.117082	M.118250	M.125001
10-40556-32	16	/	32-28	M.117083	M.118250	M.125001
10-40560	12	2,5-3,0	12	M.117082	M.118250	M.125002
10-40560-12	12	0,6	20	M.117083	M.118250	M.125002
10-40560-15	12	0,75-1	18	M.117083	M.118250	M.125002
10-40560-177	12	1,5	18-16	M.117082	M.118250	M.125002
10-40560-20	12	2	14	M.117082	M.118250	M.125002
10-40560-22	12	2,5	/	M.117082	M.118250	M.125002
10-40560-30	12	4-5	/	M.117082	M.118250	M.125002
10-40560-30M	12	4	/	M.117082	M.118250	M.125002
10-40560-38	12	6	10	M.117082	M.118250	M.125002

Please consult our sales department for other contact options or crimp tooling details.

Insertion Tool

Removal Tool

Guide Pin

© 2015 Glenair, Inc. U.S. CAGE Code 06324 Printed in Italy

Downloaded from Arrow.com.

TABLE I: INSERTION AND REMOVAL TOOLS PART NUMBERS, SIZE & DIMENSIONS

PART NUMBER	CONTACT SIZE	WIRE SIZE		INSERTION TOOL	REMOVAL TOOL	GUIDE PIN
		mm²	AWG	Glenair P/N	Glenair P/N	
10-40793-1	8	9	8	M.117344	M.118260	M.125003
10-40793-1-15	8	0,75-1	18	M.117082	M.118260	M.125003
10-40793-1-18	8	1-2	18-14	M.117082	M.118260	M.125003
10-40793-1-20	8	2	14	M.117082	M.118260	M.125003
10-40793-1-26	8	2,5-3,0	12	M.117082	M.118260	M.125003
10-40793-1-30	8	4-5	/	M.117082	M.118260	M.125003
10-40793-1-38	8	6	10	M.117344	M.118260	M.125003
10-40793-1-50	8	10	/	M.117344	M.118260	M.125003
10-10793-1-58	8	13,2	6	M.117344	M.118260	/
10-113474-4S-1	4	22-25	4	M.117347	M.118270	/
10-113474-4S-1-22	4	2,5	/	M.117082	M.118270	/
10-113474-4S-1-26	4	2,5-3,0	12	M.117082	M.118270	/
10-113474-4S-1-30	4	4-5	/	M.117082	M.118270	/
10-113474-4S-1-38	4	6	10	M.117344	M.118270	/
10-113474-4S-1-50	4	10	/	M.117344	M.118270	/
10-113474-4S-1-58	4	13,2	6	M.117344	M.118270	/
10-113474-4S-1-62	4	16	/	M.117347	M.118270	/
10-113474-1S	0	50-60	0	M.117348	M.118280	/
10-113474-1S-107	0	50	/	M.117348	M.118280	/
10-113474-1S-72	0	22-25	4	M.117347	M.118280	/
10-113474-1S-35	0	35	/	M.117348	M.118280	/
10-113474-1S-45	0	9	8	M.117344	M.118280	/
10-113474-1S-50	0	10	/	M.117344	M.118280	/
10-113474-1S-58	0	13,2	6	M.117344	M.118280	/
10-113474-1S-62	0	16	/	M.117347	M.118280	/
10-113474-0S	4/0	107	4/0	/	/	/
10-113474-0S-78	4/0	22-25	4	/	/	/
10-113474-0S-107	4/0	50	/	/	/	/
10-113474-0S-144	4/0	70	/	/	/	/

Please consult our sales department for other contact options or crimp tooling details.

Insertion Tool

Removal Tool

Guide Pin

© 2015 Glenair, Inc. U.S. CAGE Code 06324 Printed in Italy

Downloaded from Arrow.com.

ITS Bayonet Connector Assemblies
Pin Crimp Contacts
Manual and Pneumatic Tools

TABLE I: MANUAL AND PNEUMATIC TOOLS PART NUMBERS, SIZE & DIMENSIONS

PART NUMBER	CONTACT SIZE	WIRE SIZE		MANUAL CRIMP TOOL		MANUAL CRIMP TOOL (GF8 M.105062 special crimp tool for Glenair contacts)		PNEUMATIC TOOL TYPE "A"	
		mm²	AWG	MANUAL TOOL	TURRET	MANUAL TOOL	TURRET	PNEUMATIC TOOL	TURRET
10-375-20	20	0,15-0,6	26-20	M.105001	M.105026	---	---	M.105003	M.105026
10-40579	18	0,15-0,6	26-20	M.105001	M.105025	---	---	M.105003	M.105025
10-40553	16S	1-1,5	18-16	M.105007	M.105009	M.105062	GP1800	M.105002	M.105009
10-40553-12	16S	0.6	20	M.105007	M.105009	M.105062	GP1800	M.105002	M.105009
10-40553-13	16S	0,15-0,6	26-20	M.105001	M.105009	M.105001	GP1800	M.105003	M.105009
10-40553-15	16S	0,75-1,0	18	M.105007	M.105009	M.105062	GP1800	M.105002	M.105009
10-40553-20	16S	1-2	14	M.105007	M.105009	M.105062	GP1800	M.105002	M.105009
10-40553-26	16S	3	12	M.105007	M.105009	M.105062	GP1800	M.105002	M.105009
10-40557	16	1-1,5	18-16	M.105007	M.105009	M.105062	M.105063	M.105002	M.105009
10-40557-08	16	0,15-0,2	26-24	M.105001	M.105009	---	---	M.105003	M.105009
10-40557-12	16	0,6	20	M.105001	M.105009	M.105062	M.105063	M.105003	M.105009
10-40557-13	16	0,15-0,6	26-20	M.105001	M.105009	M.105062	M.105063	M.105003	M.105009
10-40557-15	16	0,75-1,0	18	M.105007	M.105009	M.105062	M.105063	M.105002	M.105009
10-40557-20	16	1-2	14	M.105007	M.105009	M.105062	M.105063	M.105002	M.105009
10-40557-22	16	2,5	/	M.105007	M.105009	M.105062	M.105063	M.105002	M.105009
10-40557-22L	16	2,5	/	M.105007	M.105012	M.105062	M.105063	M.105002	M.105012
10-40557-26	16	3	12	M.105007	M.105009	---	---	M.105002	M.105009
10-40557-32	16	/	32-28	M.105001	M.105009	M.105062	M.105063	M.105003	M.105009
10-40561	12	2,5-3,5	12	M.105007	M.105009	M.105062	M.105063	M.105002	M.105009
10-40561-12	12	0,6	20	M.105001	M.105009	M.105062	M.105063	M.105003	M.105009
10-40561-15	12	0,75-1,0	18	M.105007	M.105009	M.105062	M.105063	M.105002	M.105009
10-40561-177	12	1,5	18-16	M.105007	M.105009	M.105062	M.105063	M.105002	M.105009
10-40561-20	12	1-2	18-14	M.105007	M.105009	M.105062	M.105063	M.105002	M.105009
10-40561-22	12	2,5	/	M.105007	M.105009	M.105062	M.105063	M.105002	M.105009
10-40561-30	12	4-5	/	M.105007	M.105009	M.105062	M.105063	M.105002	M.105009
10-40561-30M	12	4	/	M.105007	M.105009	M.105062	M.105063	M.105002	M.105009
10-40561-38	12	6	10	M.105007	M.105009	M.105062	M.105063	M.105002	M.105009

Please consult our sales department for other contact options or crimp tooling details.

Manual Crimp Tool

Turret for Manual Crimp Tool

Pneumatic Crimp Tool Type "A"

Turret for Pneumatic Crimp ToolType "A"

© 2015 Glenair, Inc. U.S. CAGE Code 06324 Printed in Italy

Downloaded from Arrow.com.

TABLE I: MANUAL AND PNEUMATIC TOOLS PART NUMBERS, SIZE & DIMENSIONS

PART NUMBER	CONTACT SIZE	WIRE SIZE		MANUAL CRIMP TOOL		PNEUMATIC TOOL TYPE "B"			OLEODINAMIC TOOL	
		mm²	AWG	MANUAL TOOL	TURRET	PNEUMATIC TOOL	DIE	LOCATOR	OLEODINAMIC TOOL	DIE
10-40792	8	9	8	/	/	M.112000	M.112001	M.112309	M.112004	M.112005
10-40792-15	8	0,75-1,0	18	M.105028	M.104002	/	/	/	/	/
10-40792-18	8	1÷2	18÷14	M.105028	M.104002	/	/	/	/	/
10-40792-20	8	2	14	M.105028	M.104002	/	/	/	/	/
10-40792-26	8	2,5-3,0	12	M.105028	M.104002	/	/	/	/	/
10-40792-30	8	4-5	/	M.105028	M.104002	/	/	/	M.112004	M.112008
10-40792-38	8	6	10	/	/	M.112000	M.112001	M.112309-1	M.112004	M.112005
10-40792-50	8	10	/	/	/	M.112000	M.112001	M.112309-1	M.112004	M.112005
10-40792-58	8	13,2	6	/	/	M.112000	M.112001	M.112309-1	M.112004	M.112005
10-113474-4P	4	25	4	/	/	M.112000	M.112002	M.112311	M.112004	M.112006
10-113474-4P-22	4	2,5	/	/	/	/	/	/	M.112004	M.112009
10-113474-4P-26	4	2,5-3,0	12	/	/	/	/	/	M.112004	M.112009
10-113474-4P-30	4	4-5	/	/	/	/	/	/	M.112004	M.112008
10-113474-4P-38	4	6	10	/	/	M.112000	M.112001	M.112311	M.112004	M.112005
10-113474-4P-50	4	10	/	/	/	M.112000	M.112001	M.112311	M.112004	M.112005
10-113474-4P-58	4	13,2	6	/	/	M.112000	M.112001	M.112311	M.112004	M.112005
10-113474-4P-62	4	16	/	/	/	M.112000	M.112002	M.112311	M.112004	M.112006
10-113474-1P	0	50-60	0	/	/	M.112000	M.112003	M.112313	M.112004	M.112010
10-113474-1P-107	0	50	/	/	/	M.112000	M.112003	M.112313	M.112004	M.112010
10-113474-1P-72	0	22-25	4	/	/				M.112004	M.112006
10-113474-1P-35	0	35	/	/	/	/	/	/	M.112004	M.112007
10-113474-1P-45	0	9	8	/	/				M.112004	M.112005
10-113474-1P-50	0	10	/	/	/				M.112004	M.112005
10-113474-1P-58	0	13,2	6	/	/				M.112004	M.112005
10-113474-1P-62	0	16	/	/	/				M.112004	M.112006
10-113474-0P	4/0	107	4/0	/	/	/	/	/	M.105013	M.112012
10-113474-0P-78	4/0	25	/	/	/	/	/	/	M.112004	M.112006
10-113474-0P-107	4/0	50	/	/	/	/	/	/	M.112004	M.112010
10-113474-0P-144	4/0	70	/	/	/	/	/	/	M.105013	M.105053

Please consult our sales department for other contact options or crimp tooling details.

Pneumatic Crimp Tool Type "B"

Die For Pneumatic Crimp Tool Type "B"

Locator for Pneumatic Crimp Tool Type "B"

Oleodinamic Crimp Tool

Die for Oleodinamic Crimp Tool

© 2015 Glenair, Inc.

Downloaded from Arrow.com.

ITS Bayonet Connector Assemblies
Socket Crimp Contacts
Manual and Pneumatic Tools

TABLE I: MANUAL AND PNEUMATIC TOOLS PART NUMBERS, SIZE & DIMENSIONS

PART NUMBER	CONTACT SIZE	WIRE SIZE		MANUAL CRIMP TOOL		MANUAL CRIMP TOOL (GF8 M.105062 special crimp tool for Glenair contacts)		PNEUMATIC TOOL TYPE "A"	
		mm²	AWG	MANUAL TOOL	TURRET	MANUAL TOOL	TURRET	PNEUMATIC TOOL	TURRET
10-40520LC	20	0,15-0,6	26-20	M.105001	M.105026	---	---	M.105003	M.105026
10-40588	18	0,15-0,6	26-20	M.105001	M.105025	---	---	M.105003	M.105025
10-40552	16S	1-1,5	18-16	M.105007	M.105009	M.105062	GP1800	M.105002	M.105009
10-40552-12	16S	0,6	20	M.105007	M.105009	M.105062	GP1800	M.105002	M.105009
10-40552-13	16S	0,15-0,6	26-20	M.105001	M.105009	---	---	M.105003	M.105009
10-40552-15	16S	0,75-1	18	M.105007	M.105009	M.105062	GP1800	M.105002	M.105009
10-40552-20	16S	1-2	14	M.105007	M.105009	M.105062	GP1800	M.105002	M.105009
10-40552-26	16S	2,5-3,0	12	M.105007	M.105009	M.105062	GP1800	M.105002	M.105009
10-40556	16	1-1,5	18-16	M.105007	M.105009	M.105062	M.105063	M.105002	M.105009
10-40556-08	16	0,15-0,2	26-24	M.105001	M.105009	M.105062	M.105063	M.105003	M.105009
10-40556-12	16	0,6	20	M.105001	M.105009	M.105062	M.105063	M.105003	M.105009
10-40556-13	16	0,15-0,6	26-20	M.105001	M.105009	M.105062	M.105063	M.105003	M.105009
10-40556-15	16	0,75-1	18	M.105007	M.105009	M.105062	M.105063	M.105002	M.105009
10-40556-20	16	1-2	14	M.105007	M.105009	M.105062	M.105063	M.105002	M.105009
10-40556-22	16	2,5	/	M.105007	M.105009	M.105062	M.105063	M.105002	M.105009
10-40556-26	16	2,5-3,0	12	M.105007	M.105009	M.105062	M.105063	M.105002	M.105009
10-40556-32	16	/	32-28	M.105001	M.105009	M.105062	M.105063	M.105003	M.105009
10-40560	12	2,5-3,0	12	M.105007	M.105009	M.105062	M.105063	M.105002	M.105009
10-40560-12	12	0,6	20	M.105001	M.105009	M.105062	M.105063	M.105003	M.105009
10-40560-15	12	0,75-1	18	M.105007	M.105009	M.105062	M.105063	M.105002	M.105009
10-40560-177	12	1,5	18-16	M.105007	M.105009	M.105062	M.105063	M.105002	M.105009
10-40560-20	12	2	14	M.105007	M.105009	M.105062	M.105063	M.105002	M.105009
10-40560-22	12	2,5	/	M.105007	M.105009	M.105062	M.105063	M.105002	M.105009
10-40560-30	12	4-5	/	M.105007	M.105009	M.105062	M.105063	M.105002	M.105009
10-40560-30M	12	4	/	M.105007	M.105009	M.105062	M.105063	M.105002	M.105009
10-40560-38	12	6	10	M.105007	M.105009	M.105062	M.105063	M.105002	M.105009

Please consult our sales department for other contact options or crimp tooling details.

Manual Crimp Tool

Turret for Manual Crimp Tool

Pneumatic Crimp Tool Type "A"

Turret for Pneumatic Crimp ToolType "A"

© 2015 Glenair, Inc. U.S. CAGE Code 06324 Printed in Italy

Downloaded from Arrow.com.

TABLE I: MANUAL AND PNEUMATIC TOOLS PART NUMBERS, SIZE & DIMENSIONS

PART NUMBER	CONTACT SIZE	WIRE SIZE		MANUAL CRIMP TOOL		PNEUMATIC TOOL TYPE "B"			OLEODINAMIC TOOL	
		mm²	AWG	MANUAL TOOL	TURRET	PNEUMATIC TOOL	DIE	LOCATOR	OLEODIN-AMIC TOOL	DIE
10-40793-1	8	9	8	/	/	M.112000	M.112001	M.112309	M.112004	M.112005
10-40793-1-15	8	0,75-1	18	M.105028	M.104002	/	/	/	/	/
10-40793-1-18	8	1-2	18-14	M.105028	M.104002	/	/	/	/	/
10-40793-1-20	8	2	14	M.105028	M.104002	/	/	/	/	/
10-40793-1-26	8	2,5-3,0	12	M.105028	M.104002	/	/	/	/	/
10-40793-1-30	8	4-5	/	M.105028	M.104002	/	/	/	M.112004	M.112008
10-40793-1-38	8	6	10	/	/	M.112000	M.112001	M.112309	M.112004	M.112005
10-40793-1-50	8	10	/	/	/	M.112000	M.112001	M.112309	M.112004	M.112005
10-10793-1-58	8	13,2	6	/	/	M.112000	M.112001	M.112309	M.112004	M.112005
10-113474-4S-1	4	25	4	/	/	M.112000	M.112002	M.112311	M.112004	M.112006
10-113474-4S-1-22	4	2,5	/	/	/	/	/	/	M.112004	M.112009
10-113474-4S-1-26	4	2,5-3,0	12	/	/	/	/	/	M.112004	M.112009
10-113474-4S-1-30	4	4-5	/	/	/	/	/	/	M.112004	M.112008
10-113474-4S-1-38	4	6	10	/	/	M.112000	M.112001	M.112311	M.112004	M.112005
10-113474-4S-1-50	4	10	/	/	/	M.112000	M.112001	M.112311	M.112004	M.112005
10-113474-4S-1-58	4	13,2	6	/	/	M.112000	M.112001	M.112311	M.112004	M.112005
10-113474-4S-62	4	16	/	/	/	M.112000	M.112002	M.112311	M.112004	M.112006
10-113474-1S	0	50-60	0	/	/	M.112000	M.112003	M.112313	M.112004	M.112010
10-113474-1S-107	0	50	/	/	/	M.112000	M.112003	M.112313	M.112004	M.112010
10-113474-1S-72	0	22-25	4	/	/	M.112000	M.112002	M.112313	M.112004	M.112006
10-113474-1S-35	0	35	/	/	/	/	/	/	M.112004	M.112007
10-113474-1S-45	0	9	8	/	/				M.112004	M.112005
10-113474-1S-50	0	10	/	/	/				M.112004	M.112005
10-113474-1S-58	0	13,2	6	/	/				M.112004	M.112005
10-113474-1S-62	0	16	/	/	/				M.112004	M.112006
10-113474-0S	4/0	107	4/0	/	/	/	/	/	M.105013	M.112012
10-113474-0S-78	4/0	25	/	/	/	/	/	/	M.112004	M.112006
10-113474-0S-107	4/0	50	/	/	/	/	/	/	M.112004	M.112010
10-113474-0S-144	4/0	70	/	/	/	/	/	/	M.105013	M.105053

Please consult our sales department for other contact options or crimp tooling details.

Pneumatic Crimp Tool Type "B"

Die For Pneumatic Crimp Tool Type "B"

Locator for Pneumatic Crimp Tool Type "B"

Oleodinamic Crimp Tool

Die for Oleodinamic Crimp Tool

© 2015 Glenair, Inc.

Downloaded from Arrow.com.

ETHERNET, VIDEO, AND HIGH-SPEED DATA NETWORKING

OPTO-ELECTRONIC INTERCONNECT SOLUTIONS

For size and weight savings in avionics, naval, ground tactical equipment, oil and gas, industrial, mining, in-flight entertainment, and other harsh application environments

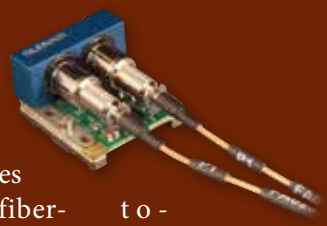

The need for reduced weight and small form-factor components, particularly in airframe and other high-performance environments, has led Glenair to develop a revolutionary new opto-electronic product series that incorporates transmitter and receiver functions, fiber-to-copper media conversion, and signal aggregation directly into interconnect wiring systems. These harsh-environment interconnect technologies reduce size and weight, and improve the performance of Ethernet, Video and High-Speed Digital applications—by leveraging the strengths of both electrical and optical media. Glenair offers both standard catalog solutions, as well as the integration of electronics or opto-electronics into rugged custom packages and cable assemblies per customer and application requirements.

Glenair®

Glenair, Inc.
1211 Air Way
Glendale, CA
91201-2497
818-247-6000
sales@glenair.com
www.glenair.com

Downloaded from Arrow.com.

Part Number Index

Product Description	Page
Introduction	Intro
Glenair Series ITS and ITS-RG Product Selection Guide and Table of Contents	Into-1
Reverse Bayonet Rail Application Guide	Into-6
Glenair Series ITS and ITS-RG Application Examples	Into-8
Technical Reference	**A**
Glenair Series ITS and ITS-RG Technical Reference	A-1
Series ITS Summary of Connector Styles and Backshells	A-2
Glenair ITS Cross Sectional Cutaway View	A-4
Series ITS and ITS-RG Materials Overview	A-5
Series ITS and ITS-RG Contact Arrangements - Front View	A-6
Series ITS and ITS-RG Contact Arrangement Tables	A-28
Series ITS and ITS-RG Insert Rotation Alternate Positions	A-30
Series ITS and ITS-RG Insert Arrangements for Thermocouple Contacts	A-32
Series ITS and ITS-RG Panel Cut-Out Mounting Data	A-36
Series ITS How To Order Part Number Information	A-38
Series ITS Contact Rating, Materials and Finishes	A-39
Series ITS Reverse Bayonet Connectors	**B**
Series ITS Reverse Bayonet Product Features	B-1
3100 A (N0) and 4100 A (N0) Front Panel Mount Square Flange Receptacle	B-2
3100 (A) and 3100 (R) Front Panel Mount Square Flange Receptacle	B-4
3100 A (BR) and ITS 4100 A (BR) Front Panel Mount Square Flange Receptacle	B-6
3100 A (PG) and 4100 A (PG) Front Panel Mount Square Flange Receptacle	B-8
3100 A (FM) and 4100 A (FM) Front Panel Mount Square Flange Receptacle	B-10

© 2015 Glenair, Inc. U.S. CAGE Code 06324 Printed in Italy

Downloaded from Arrow.com.

Glenair®

Part Number Index

Product Description	Page
3100 A (PHM) and 4100 A (PHM) Front Panel Mount Square Flange Assembly	B-12
3100 A (PHM-EMI67) and 4100 A (PHM-EMI67) Front Panel Mount Square Flange Receptacle	B-14
3100 (F) and 4100 (F) Front Panel Mount Square Flange Receptacle	B-16
3100 A (N5), 3100 R (N5), 4100 A (N5) and 4100 R (N5) Front Panel Mount Square Flange Recep.	B-18
3100 (G) and 4100 (G) Front Panel Mount Square Flange Receptacle Assembly	B-20
3100 (GR) and 4100 (GR) Front Panel Mount Square Flange Receptacle	B-22
3100 (RS) and 4100 (RS) Front Panel Mount Square Flange Receptacle	B-24
3100 (SP) and 4100 (SP) Front Panel Mount Square Flange Receptacle	B-26
3100 A (ZL) and 4100 A (ZL) Front Panel Mount Square Flange Receptacle	B-28
3101 A (N0) and 4100 A (N0) In-Line Cylindrical Receptacle with Accessory Mounting Thread	B-30
3101 (A) and 4101 (R) In-Line Cylindrical Receptacle with Accessory Backshell	B-32
3101 A (BR) and 4101 A (BR) In-Line Cylindrical Receptacle	B-34
3101 A (PG) and 4101 A (PG) In-Line Cylindrical Receptacle	B-36
3101 A (FM) and 4101 A (FM) In-Line Cyclindrical Receptacle	B-38
3101 A (PHM) and 4101 A (PHM) In-Line Cylindrical Receptacle	B-40
3101 A (PHM-EMI67) and 4101 A (PHM-EMI67) In-Line Cylindrical Receptacle	B-42
3101 (F) and 4101 (F) In-Line Cylindrical Receptacle Assembly	B-44
3101 A (N5), 3101 R (N5), 4101 A (N5) and 4101 R (N5) In-Line Cylindrical Receptacle Assembly	B-46
3101 (G) and 4101 (G) In-Line Cylindrical Receptacle Assembly	B-48
3101 (GR) and 4101 (GR) In-Line Cylindrical Receptacle Assembly	B-50
3101 (RS) and 4101 (RS) In-Line Cylindrical Receptacle Assembly	B-52
3101 (SP) and 4101 (SP) In-Line Cylindrical Receptacle Assembly	B-54
3101 A (ZL) and 4101 A (ZL) In-Line Cylindrical Receptacle	B-56

© 2015 Glenair, Inc. U.S. CAGE Code 06324 Printed in Italy

Downloaded from Arrow.com.

Product Description	Page
3102 (A), 3102 (R) 4102 (A) and 4102 (R) Front Panel Mount Square Flange Receptacle	B-58
ITS 02 PP Front Mount Through Bulkhead Square Flange Receptacle	B-60
3102 (Y) Front Panel Mount Square Flange Receptacle with PCB Contacts	B-62
3103 (Y) Rear Panel Mount Square Flange Receptacle with PCB Contacts	B-64
3103 (A), 3103 (R), 4103 (A) and 4103 (R) Rear Panel Mount Square Flange Receptacle	B-66
31030 A (N0) and 41030 A (N0) Rear Panel Mount Square Flange Receptacle	B-68
31030 (A) and 41030 (R) Rear Panel Mount Square Flange Receptacle Assembly	B-70
31030 A (BR) and 41030 A (BR) Rear Panel Mount Square Flange Receptacle Assembly	B-72
31030 A (PG) and 41030 A (PG) Rear Panel Mount Square Flange Receptacle Assembly	B-74
31030 A (FM) and 41030 A (FM) Rear Panel Mount Square Flange Receptacle Assembly	B-76
31030 A (PHM) and 41030 A (PHM) Rear Panel Mount Square Flange Receptacle Assembly	B-78
31030 A (PHM-EMI67) and 41030 A (PHM-EMI67) Rear Panel Mount Square Flange Receptacle	B-80
31030 (F) and 41030 (F) Rear Panel Mount Square Flange Receptacle	B-82
31030 A (N5), 31030 R (N5), 41030 A (N5) and 41030 R (N5) Rear Panel Mount Square Flange Recep.	B-84
31030 (G) and 41030 (G) Rear Panel Mount Square Flange Receptacle	B-86
31030 (GR) and 41030 (GR) Rear Panel Mount Square Flange Receptacle Assembly	B-88
31030 (RS) and 41030 (RS) Rear Panel Mount Square Flange Receptacle	B-90
31030 (SP) and 41030 (SP) Rear Panel Mount Square Flange Receptacle	B-92
31030 A (ZL) and 41030 A (ZL) Rear Panel Mount Square Flange Receptacle with BAND-IT Backshell	B-94
31038 (A), 31038 (R), 41038 (A) and 41038 (R) Rear Panel Mount Square Flange Receptacle	B-96
3107 (A) and 4107 (A) Rear Panel Mount Jam Nut Receptacle	B-98
31070 A (N0) and 41070 A (N0) Rear Panel Mount Jam Nut Receptacle	B-100
31070 (A), 31070 (AR), 41070 (A) and 41070 (AR) Rear Panel Mount Jam Nut Receptacle	B-102

© 2015 Glenair, Inc. U.S. CAGE Code 06324 Printed in Italy

Downloaded from Arrow.com.

Glenair®

Part Number Index

Product Description	Page
31070 (GR) and 41070 (GR) Rear Panel Mount Jam Nut Receptacle	B-104
31078 (A), 31078 (R), 41078 (A) and 41078 (R) Rear Panel Mount Jam Nut Receptacle	B-106
3106 A (N0) and 4106 A (N0) Straight Cylindrical Plug Connector	B-108
3106 (A), 3106 (R), 4106 (A) and 4106 (R) Straight Cylindrical Plug Assembly	B-110
3106 A (BR) and 4106 A (BR) Straight Cylindrical Plug Assembly	B-112
3106 A (PG) and 4106 A (PG) Straight Cylindrical Plug Assembly	B-114
3106 A (FM) and 4106 A (FM) Straight Cylinder Plug Assembly	B-116
3106 A (PHM) and 4106 A (PHM) Straight Cylindrical Plug Assembly	B-118
3106 A (PHM-EMI67) and 4106 A (PHM-EMI67) Straight Cylindrical Plug Assembly	B-120
3106 (F) and 4106 (F) Straight Cylindrical Plug Assembly	B-122
3106 A (N5), 3106 R (N5), 4106 A (N5) and 4106 R (N5) Straight Cylindrical Plug	B-124
3106 (G) and 4106 (G) Straight Cylindrical Plug Assembly	B-126
3106 (GR) and 4106 (GR) Straight Cylindrical Plug Assembly	B-128
3106 (RS) and 4106 (RS) Straight Cylindrical Plug Assembly	B-130
3106 (SP), G 3106 (SP), 4106 (SP) and G 4106 (SP) Straight Cylindrical Plug Assembly	B-132
3106 KG Straight Cylindrical Plug Assembly with Kellem Grip Backshell	B-134
3106 A (ZL) and 4106 A (ZL) Straight Cylindrical Plug Assembly	B-136
31045 (A), 31045 (R), 41045 (A) and 41045 (R) Cylindrical Plug Assembly with 45° Backshell	B-138
3108 (A), 3108 (R), 4108 (A) and 4108 (R) Cylindrical Plug Assembly with 90° Backshell	B-140
3108 A (BR) and 4108 A (BR) Cylindrical Plug Assembly with 90° Backshell	B-142
3108 A (PG) and 4108 A (PG) Cylindrical Plug Assembly with 90° Backshell	B-144
3108 A (FM) and 4108 A (FM) Cylindrical Plug Assembly with 90° Backshell	B-146
3108 A (PHM) and 4108 A (PHM) Cylindrical Plug Assembly with 90° Backshell	B-148

© 2015 Glenair, Inc. U.S. CAGE Code 06324 Printed in Italy

Downloaded from Arrow.com.

Product Description	Page
3108 (F) and 4108 (F) Cylindrical Plug Assembly with 90° Backshell	B-150
3108 A (N5), 3108 R (N5), 4108 A (N5) and 4108 R (N5) Cylindrical Plug with 90° Backshell	B-152
3108 (GR) and 4108 (GR) Cylindrical Plug Assembly with 90° Backshell	B-154
3108 (GS) and 4108 (GS) Cylindrical Plug Assembly with 90° Backshell	B-156
3108 (SP), G 3108 (SP), 4108 (SP) and G 4108 (SP) Cylindrical Plug with 90° Backshell	B-158
3108 A (ZL) and 4108 A (ZL) Cylindrical Plug Assembly with 90° BAND-IT Backshell	B-160
3126 (A), 3126 (R), 4126 (A) and 4126 (R) Square Flange Panel Mount Plug	B-162
Series ITS-RG Rubber Coated Reverse Bayonet Connectors	**C**
Glenair Series ITS-RG Product Line Overview	C-1
Series ITS-RG How To Order Part Number Breakdown	C-2
4100 (RG) and 4100 (RRG) Front Panel Mount Square Flange Receptacle	C-3
4100 RG (D1) and 4100 RRG (D1) Front Panel Mount Square Flange Receptacle	C-5
4101 (RG) and 4101 (RRG) Cylindrical In-Line Receptacle Assembly	C-7
4101 RG (D1) and 4101 RRG (D1) Cylindrical In-Line Receptacle Assembly	C-9
4102 (AFS) 4102 (RFS) Front Panel Square Flange Receptacle	C-11
4103 (A) and 4103 (R) Rear Panel Mount Square Flange Receptacle	C-12
41030 (RG) and 41030 (RRG) Rear Panel Mount Square Flange Receptacle	C-13
4106 (AGG) and 4106 (RGG) Straight Plug Connector with Rubber Coated Coupling Nut	C-15
4106 (RG) and 4106 (RRG) Straight Cylindrical Plug Connector	C-17
4106 (RGP) and 4106 (RRGP) Straight Cylindrical Plug Connector	C-19
4106 (RGBF) and 4106 (RRGBF) Straight Cylindrical Plug Connector	C-21
4106 RG (D1) and 4106 RRG (D1) Straight Plug Assembly	C-23
3108 (AGG) and 4108 (RGG) 90° Plug Connector with Rubber Coated Coupling Nut	C-25
4108 (RG) 4108 (RRG) 90° Cylindrical Plug Connector	C-27

© 2015 Glenair, Inc. U.S. CAGE Code 06324 Printed in Italy

Downloaded from Arrow.com.

Glenair®

Part Number Index

Product Description	Page
4108 (RGP) and 4108 (RRGP) 90° Cylindrical Plug Connector	C-29
4108 RG (D1) and 4108 RRG (D1) 90° Cylindrical Plug Assembly	C-31
Backshells and Accessories for Series ITS and ITS-RG Connectors	**D**
Glenair Backshells and Accessories for Series ITS and ITS-RG: Product Line Overview	D-1
IT 101393-XX3 Extender Backshell for Plug Connectors	D-2
IT 37267-XXBRXX BR Adapter for Termination of UNI4883 Rubber Conduit	D-4
IT 3057-XXA General Duty Cable Clamp for Jacketed or Multipolar Cable or Wires	D-6
IT 3057-XXC Waterproof Cable Clamp for Jacketed Wires Protected by Tubing	D-8
IT 3420-XX (Class A) and IT 3420-XXA (Class C) Neoprene Sleeve for Protection and Reduction	D-10
ITB-02T-XX Receptacle Cover Cap with Stainless Steel Chain	D-12
ITB 02TF-XX Receptacle Connector Cap with Stainless Steel Wire Rope	D-14
ITB 02KA-XX Receptacle Connector Cap with Polyamide Black Rope	D-16
ITB 06T-XX Plug Connector Cap with Stainless Steel Chain	D-18
ITB 06TF-XX Plug Connector Cap with Stainless Steel Wire Rope	D-20
ITB 06KC-XX Plug Connector Cap with Polyamide Black Rope	D-22
ITB-07T-XX Jam Nut Connector Cap with Stainless Steel Chain	D-24
ITB 07TF-XX Jam Nut Connector Cap with Stainless Steel Wire Rope	D-26
IT 90376-XX (R) Plug Connector Protective Plastic Dust Cap	D-28
ITS 05-XX Dummy Plug Stowage Receptacle	D-30
IT 40450-XX and IT 40450-XX (S) Connector Mounting Gaskets for Front Mounted Square Flange	D-32
IT 40460-XX and IT 40460-XX (S) Connector Mounting Gaskets for Rear Mounted Square Flange	D-33
Contacts and Assembly Tools for Series ITS and ITS-RG Connectors	**E**
Glenair Contacts and Assembly Tools for Series ITS and ITS-RG	E-1

© 2015 Glenair, Inc. U.S. CAGE Code 06324 Printed in Italy

Downloaded from Arrow.com.

Product Description	Page
IT-305045-XX Wire Hole Plug for Contact Inserts	E-2
IT-101033-XX Wire Hole Plug for Wire Sealing Grommets	E-3
Pin Crimp Removable Contact: Part Numbers, Sizes and Dimensions	E-4
Socket Crimp Removable Contact: Part Numbers, Sizes and Dimensions	E-6
CC 700XX Size 8 Coaxial Pin and Socket Contacts	E-8
CC 700XX Coaxial contact Assembly Procedure	E-9
Crimp Removable Pin Contact Insertion and Removal Tools	E-10
Crimp Removable Socket Contact Insertion and Removal Tools	E-12
Crimp Removable Pin Contact Manual and Pnuematic Crimping Tools	E-14
Crimp Removable Socket Contact Manual and Pnuematic Crimping Tools	E-16

© 2015 Glenair, Inc.

Downloaded from Arrow.com.

INNOVATION

Performance • Durability • Ease of Use

POWER TRIP

ITS power

Geo-Marine®

Band-Master™ ATS

Well-Master™ 260°

Octobyte

SAV-CON®
CONNECTOR SAVERS

ARMORLITE™

HiPer D MIL 24308™

GUARDIAN

GLASS-SEALED Hermetic CONNECTORS

SUPERSEAL™

This special industrial-strength capability guide provides a comprehensive overview of Glenair's "no gap" family of interconnect solutions for rugged industrial, rail, geophysical and power industry applications. No other interconnect manufacturer in the world offers such a broad range of connectors, backshells, wire protection conduit, shrink boots, tools and more for harsh-environment industrial applications. All our solutions are backed with our high availability customer service model, which includes in-stock inventory for thousands of critical part numbers, no dollar or quantity minimum orders, free samples upon request, free engineering and application development and more. Contact the factory or our industrial/rail product team for application engineering assistance.

Downloaded from Arrow.com.

WHY CHOOSE GLENAIR?

Outstanding Customer Service!

Plenty of Raw Materials!

In-House Assembly!

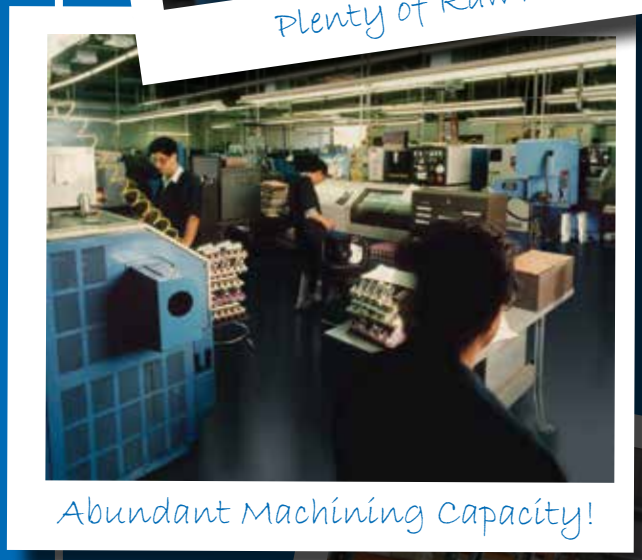

Abundant Machining Capacity!

Huge "Same-Day" Inventory!

Glenair®

Downloaded from Arrow.com.

Out of This World

INTERCONNECT SOLUTIONS

Glenair, Inc.
1211 Air Way • Glendale, California • 91201-2497
Telephone: 818-247-6000 • Fax: 818-500-9912 • sales@glenair.com
www.glenair.com

Glenair Power Products Group
860 N. Main Street Extension
Wallingford, CT
06492
Telephone: 203-741-1115
Facsimile: 203-741-0053
sales@glenair.com

Glenair Microway Systems
7000 North Lawndale Avenue
Lincolnwood, IL
60712
Telephone: 847-679-8833
Facsimile: 847-679-8849

Glenair Electric GmbH
Schaberweg 28
61348 Bad Homburg
Germany
Telephone: 06172 / 68 16 0
Facsimile: 06172 / 68 16 90
germany@glenair.com

Glenair Italia S.p.A.
Via Del Lavoro, 7
40057 Quarto Inferiore –
Granarolo dell'Emilia
Bologna, Italy
Telephone: +39-051-782811
Facsimile: +39-051-782259
info@glenair.it

Glenair Korea
B-1304 Gunpo IT Valley
148 Gosan-Ro, Gunpo-Si
Kyunggi-Do, Korea
435-733
Telephone: +82-31-8068-1090
Facsimile: +82-31-8068-1092
sales@glenair.kr

Glenair UK Ltd
40 Lower Oakham Way
Oakham Business Park
P.O. Box 37, Mansfield
Notts, NG18 5BY England
Telephone: +44-1623-638100
Facsimile: +44-1623-638111
sales@glenair.co.uk

Glenair Nordic AB
Gustav III : S Boulevard 46
SE-169 27 Solna
Sweden
Telephone: +46-8-50550000
sales@glenair.se

Glenair Iberica
C/ La Vega, 16
45612 Velada
Spain
Telephone: +34-925-89-29-88
Facsimile: +34-925-89-29-87
sales@glenair.es

Glenair France SARL
7, Avenue Parmentier
Immeuble Central Parc #2
31200 Toulouse
France
Telephone: +33-5-34-40-97-40
Facsimile: +33-5-61-47-86-10
sales@glenair.fr

© 2015 Glenair, Inc.

Printed in U.S.A.

Downloaded from Arrow.com.