PRODUCT CATALOG

HIROSE ELECTRIC CO.,LTD.

DF40T/DF40GT Series

0.4mm Pitch, 3.38mm Depth, 125°C Heat Resistance, Board to Board/FPC to Board Connector for Automotive

125℃ High Temp

Wide Variation

Compact

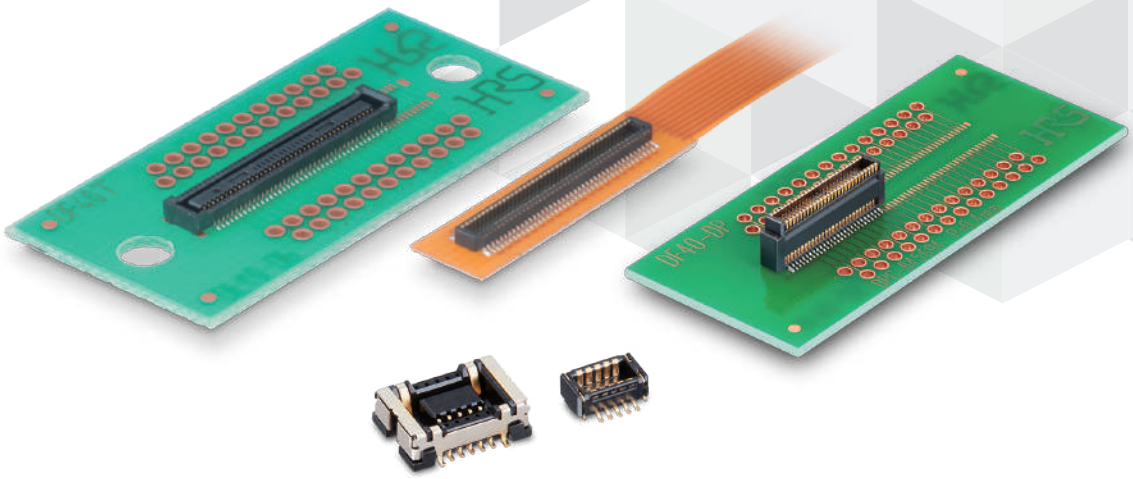

Aug.1.2026 Copyright 2026 HIROSE ELECTRIC CO., LTD. All Rights Reserved.

Product Page
https://www.hirose.com/en/product/series/DF40T

Special Features Page
https://www.hirose.com/product/en/pr/df40t/

Jan. 2026

Downloaded from Arrow.com.

Features

1. Space-Saving Design and Wide Variations

The space-saving design with 0.4mm pitch and 3.38mm depth, a wide variety of number of pos. and height variation.

●Stacking Height 1.5mm to 4.0mm

Stacking Height (mm)	1.5	2.0	2.5	3.0	3.5	4.0
10pos.	MP	—	—	—	MP	—
20pos.	UP	MP	MP	MP	MP	MP
24pos.	—	MP	—	—	—	—
30pos.	MP	MP	MP	MP	MP	MP
34pos.	MP	—	—	—	—	—
40pos.	MP	UP	UP	MP	MP	MP
50pos.	MP	—	MP	—	—	MP
60pos.	MP	—	—	—	MP	—
80pos.	—	MP	—	—	—	—
100pos.	MP	—	—	—	—	—
120pos.	MP	—	—	—	—	—

●Stacking Height 4.5mm to 7.0mm

Stacking Height (mm)	4.5	5.0	5.5	6.0	6.5	7.0
10pos.	MP	—	—	—	MP	—
20pos.	UP	UP	UP	UP	UP	UP
30pos.	UP	UP	UP	UP	UP	UP
34pos.	—	—	—	—	—	—
40pos.	UP	UP	UP	UP	UP	UP
50pos.	MP	—	MP	—	—	MP
60pos.	UP	—	—	—	—	—
120pos.	—	—	—	—	—	—

(Note)
MP: Mass Production
UP: Under Planning
UD: Under Development

Aug.1.2026 Copyright 2026 HIROSE ELECTRIC CO., LTD. All Rights Reserved.

Downloaded from Arrow.com.

2. 125℃ Heat Resistant Contact Design

Design and Materials for Heat Resistance, Stable Contact Resistance

Heat resistance test 125℃ after 1,000h
Contact resistance AVG: Initial 19.05 → after 1,000h 18.62mΩ

Temperature cycle test -55 to +125℃ after 1,000 cycles
Contact resistance AVG:
Initial 19.76 → after 1,000 cycles 20.05mΩ

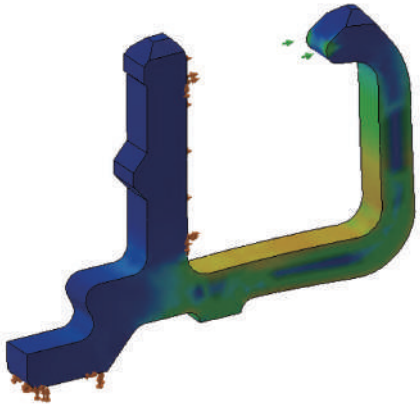

3. World Longest Class Effective Mating Length

Stable connection with the world's largest effective mating length realization

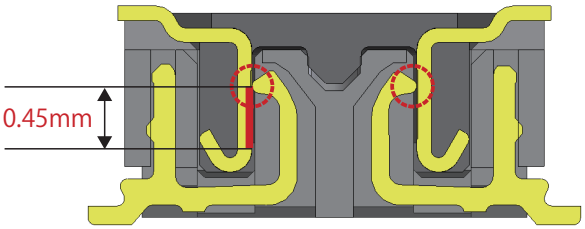

Aug.1.2026 Copyright 2026 HIROSE ELECTRIC CO., LTD. All Rights Reserved.

Downloaded from Arrow.com.

Aug.1.2026 Copyright 2026 HIROSE ELECTRIC CO., LTD. All Rights Reserved.

4. Guide Ribs for Wide Self Alignment Range

Self Alignment Range:
±0.33mm in X and Y Directions
Achieves smooth Mating Operation

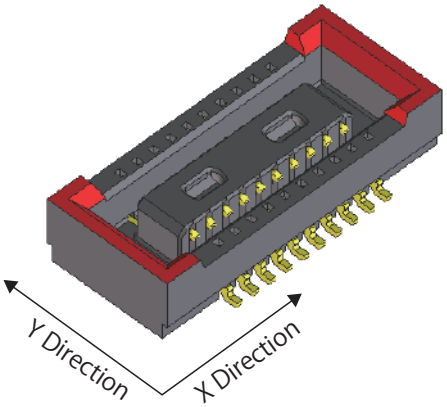

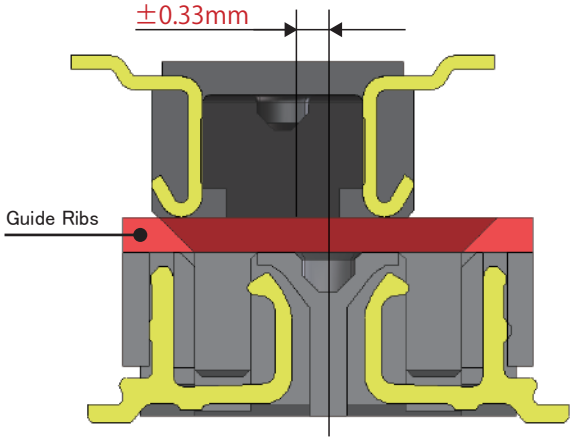

Broaden the range of self alignment during mating, efficiently using dead space.

5. Supports PCI-ex Gen4(16Gbps)

All DF40T series is applicable to the PCI-ex Gen4 transmission.

6. Metal Shielding for Superior EMI【DF40GT】

EMI prevention by shield plate on receptacle side.
Magnetic Field Reduced by 18.5dB μA/m with Shield Plate

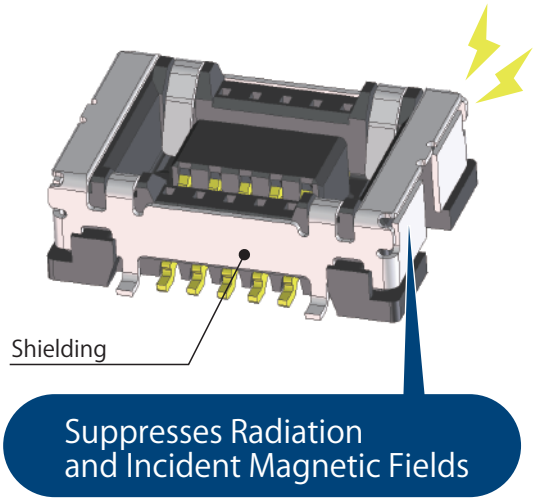

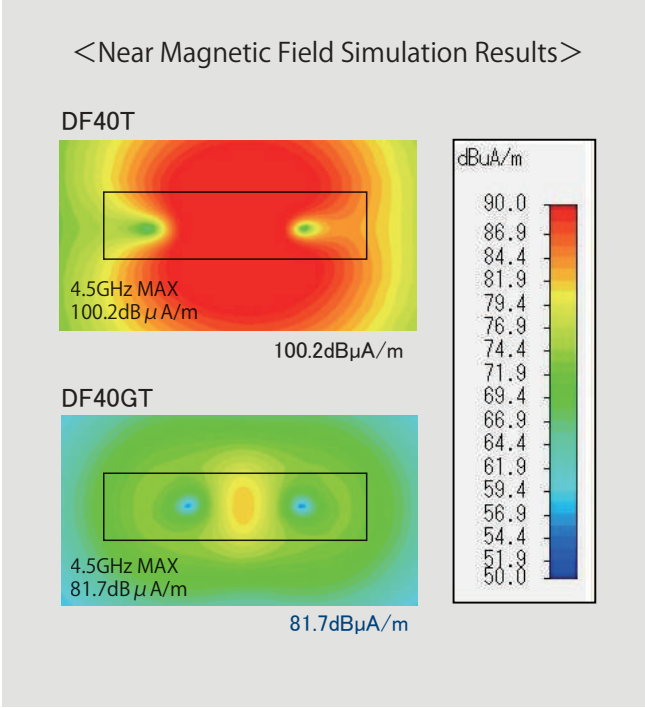

Downloaded from Arrow.com.

7. Reliable Ground Design【DF40GT】

The contact area between the shield plate and the retention tab placed at the four corners strengthens grounding.

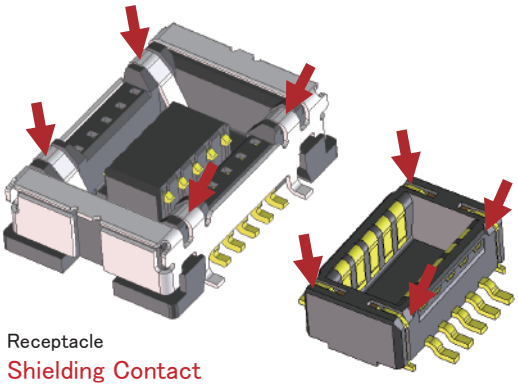

Receptacle
Shielding Contact Spring

Plug
Retention Tab Contact Point

Ground connection on dead space

Aug.1.2026 Copyright 2026 HIROSE ELECTRIC CO., LTD. All Rights Reserved.

Downloaded from Arrow.com.

Aug.1.2026 Copyright 2026 HIROSE ELECTRIC CO., LTD. All Rights Reserved.

Applications

It can be used as a FPC to Board connector inside in-vehicle applications such as cameras, millimeter-wave radar, and LiDAR.

Product Specifications

Rated Current	0.3A	Operating Temperature (Note 1)(Note 2)	-55 to +125℃
Rated Voltage	30V AC/DC	Storage Temperature (Note 3)	-10 to +60℃

Item	Specifications	Conditions
Contact Resistance	90mΩ Max.	Measured at 20mV AC, 1kHz, 1mA
Insulation Resistance	50MΩ Min.	Measured at 100V DC
Withstand Voltage	No Flashover or Breakdown	100V AC for 1 min.
Mating Durability	Contact Resistance: 90mΩ Max. No damage, cracks or part dislocation.	10 times
Vibration Resistance	There should be no electrical interruption of 1 μs Min. No damage, cracks or part dislocation.	Frequency 10 to 500Hz, Acceleration 49m/s^2 Swept speed 1oct/min 8 hours each of 3-axis direction
Heat Resistance	Contact Resistance: 90mΩ Max. No damage, cracks or part dislocation.	Left for 1000 hours at Temperature 125±2℃
Moisture Resistance	Contact Resistance: 90mΩ Max. Insulation Resistance: 25MΩ Min. No damage, cracks or part dislocation.	Temperature -10→+65℃, RH In 90 - 96% Left for 10 cycles (240 hours)
Temperature Cycles	Contact Resistance: 90mΩ Max. No damage, cracks or part dislocation.	Temperature -55℃ : 30min. → +125℃ : 30min., 1000 cycles (Tank transfer time: 2 to 3min.)
Solder Heat Resistance	No deformation in appearance or significant damage to contacts.	Reflow: According to the Recommended Temperature Profile Hand Soldering: 350℃ within 3 sec.

Note 1: Includes the temperature rise due to current flow.
Note 2: Use without condensation.
Note 3: Storage refers to long-term storage of unused items before they are mounted on the PCB.
Operating temperature and humidity range apply when the product is not powered after PCB mounting and when temporarily stored during transportation.

Materials / Finish

■125℃ Heat Resistant Standard Type (DF40T)

Product	Component	Material	Color / Finish
Plug Receptacle	Housing	LCP	Black
	Signal Contact	Copper Alloy	Gold Plating

■125℃ Heat Resistant Shielded Type (DF40GT)

Product	Component	Material	Color / Finish
Plug	Housing	LCP	Black
	Signal Contact	Copper Alloy	Gold Plating
	Retention Tab	Copper Alloy	Gold Plating
Receptacle	Housing	LCP	Black
	Signal Contact	Copper Alloy	Gold Plating
	Shield	Copper Alloy	Gold Plating

Downloaded from Arrow.com.

Product Number Structure

Please utilize the below part number chart when selecting.

■ DF40T (125℃ Heat Resistant Standard Type)

●Plug (Stacking Height 1.5mm to 4.0mm)

DF40 # - # DP - 0.4 V (##)

❶ ❷ ❸ ❹ ❺ ❻ ❼

❶ Series Name	DF40	❺ Contact Pitch	0.4mm
❷ Shape Symbol	TC: No Retention Tab	❻ Contact Type	V: Straight SMT
❸ No. of Pos.	10, 20, 24, 30, 34, 40, 50, 60, 80, 100, 120	❼ Packaging Type	(51): Embossed Packaging (88): Embossed Packaging
❹ Connector Type	DP: Double Row Pin Plug		

●Plug (Stacking Height 4.5mm to 7.0mm)

DF40 # (3.0) - # DP - 0.4 V (##)

❶ ❷ ❸ ❹ ❺ ❻ ❼ ❽

❶ Series Name	DF40	❻ Contact Pitch	0.4mm
❷ Shape Symbol	TC: No Retention Tab	❼ Contact Type	V: Straight SMT
❸ Stacking Height	Stacking Height of Receptacle +3.0mm	❽ Packaging Type	(51): Embossed Packaging (88): Embossed Packaging
❹ No. of Pos.	10, 50		
❺ Connector Type	DP: Double Row Pin Plug		

●Receptacle

DF40 # (##) - # DS - 0.4 V (##)

❶ ❷ ❸ ❹ ❺ ❻ ❼ ❽

❶ Series Name	DF40	❹ No. of Pos.	10, 20, 24, 30, 34, 40, 50, 60, 80, 100, 120
❷ Shape Symbol	TB: Retention Tab TC: No Retention Tab	❺ Connector Type	DS: Double Row Receptacle
❸ Stacking Height	None: 1.5mm 2.0: 2.0mm 2.5: 2.5mm 3.0: 3.0mm 3.5: 3.5mm 4.0: 4.0mm	❻ Contact Pitch	0.4mm
		❼ Contact Type	V: Straight SMT
		❽ Packaging Type	(51): Embossed Packaging (88): Embossed Packaging

Aug.1.2026 Copyright 2026 HIROSE ELECTRIC CO., LTD. All Rights Reserved.

Downloaded from Arrow.com.

■ DF40GT (125℃ Heat Resistant Shield Type)

●Plug

DF40 GT - # DP - 0.4 V (51)

❶ ❷ ❸ ❹ ❺ ❻ ❼

❶ Series Name	DF40	❺ Contact Pitch	0.4mm
❷ Shape Symbol	GT : With Shield	❻ Contact Type	V : Straight SMT
❸ No. of Pos.	10	❼ Packaging Type	(51) : Embossed Packaging
❹ Connector Type	DP : Double Row Pin Plug		

●Receptacle

DF40 GT (##) - # DS - 0.4 V (51)

❶ ❷ ❸ ❹ ❺ ❻ ❼ ❽

❶ Series Name	DF40	❺ Connector Type	DS: Double Row Receptacle
❷ Shape Symbol	GT: With Shield	❻ Contact Pitch	0.4mm
❸ Stacking Height	1.5: 1.5mm	❼ Contact Type	V: Straight SMT
❹ No. of Pos.	10	❽ Packaging Type	(51): Embossed Packaging

Combinations

■125℃ Heat Resistant Standard Type (DF40T)

Unit : mm

Receptacle/Plug	DF40TC-##DP-0.4V(51)	DF40TC(3.0)-##DP-0.4V(51)
DF40TC-##DS-0.4V(51)	1.5	4.5
DF40TC(2.0)-##DS-0.4V(51)	2.0	5.0
DF40TC(2.5)-##DS-0.4V(51)	2.5	5.5
DF40TC(3.0)-##DS-0.4V(51)	3.0	6.0
DF40TC(3.5)-##DS-0.4V(51)	3.5	6.5
DF40TC(4.0)-##DS-0.4V(51)	4.0	7.0

■125℃ Heat Resistant Shielded Type (DF40GT)

Unit : mm

Receptacle/Plug	DF40GT-10DP-0.4V(51) Stacking Height
DF40GT(1.5)-10DS-0.4V(51)	1.5

Aug.1.2026 Copyright 2026 HIROSE ELECTRIC CO., LTD. All Rights Reserved.

Downloaded from Arrow.com.

DF40T (125℃ Heat Resistant Standard Type) Plug (Stacking Height 1.5mm to 7.0mm)

●Stacking Height 1.5mm to 4.0mm

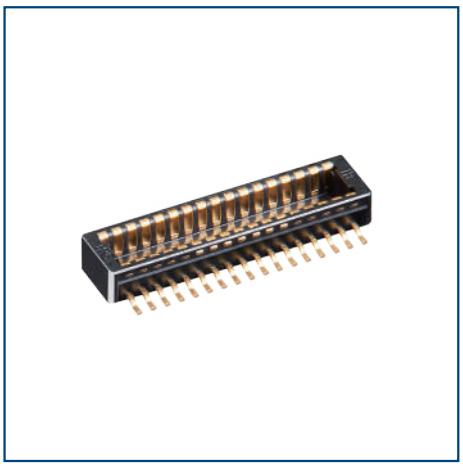

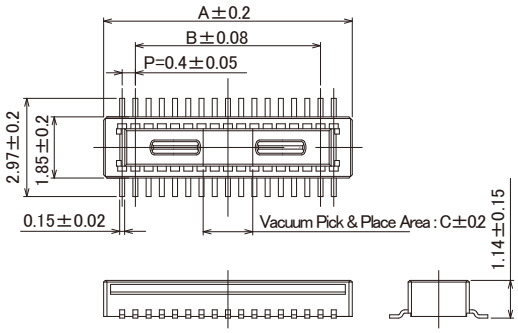

●Recommended PCB Layout

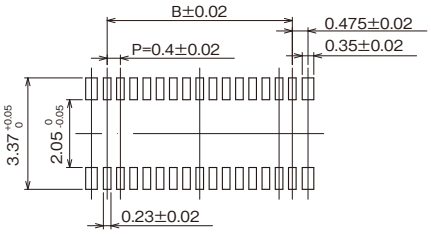

Recommended Metal Mask Thickness: 0.12mm, Open Area Ratio : 80%

Unit : mm

Part No.	HRS No.	No. of Pos.	A	B	C	Purchase Unit
DF40TC-10DP-0.4V(51)	CL0684-4269-0-51	10	3.52	1.60	1.00	5,000pcs per reel
DF40TC-20DP-0.4V(51)	CL0684-4262-0-51	20	5.52	3.60	1.00	
DF40TC-24DP-0.4V(51)	CL0684-4308-0-51	24	6.32	4.40	1.20	
DF40TC-30DP-0.4V(51)	CL0684-4263-0-51	30	7.52	5.60	1.50	
DF40TC-34DP-0.4V(51)	CL0684-4255-0-51	34	8.32	6.40	2.30	
DF40TC-40DP-0.4V(51)	CL0684-4264-0-51	40	9.52	7.60	3.20	
DF40TC-50DP-0.4V(51)	CL0684-4268-0-51	50	11.52	9.60	3.20	
DF40TC-60DP-0.4V(51)	CL0684-4281-0-51	60	13.52	11.60	3.20	
DF40TC-80DP-0.4V(51)	CL0684-4289-0-51	80	17.52	15.60	3.20	
DF40TC-100DP-0.4V(51)	CL0684-4291-0-51	100	21.52	19.60	3.20	
DF40TC-120DP-0.4V(88)	CL0684-4295-0-88	120	25.52	23.60	3.20	

Note 1: Please order embossed tape packaged items by the reel.
Note 2: This connector has no polarity.

Aug.1.2026 Copyright 2026 HIROSE ELECTRIC CO., LTD. All Rights Reserved.

Downloaded from Arrow.com.

●Stacking Height 4.5mm to 7.0mm

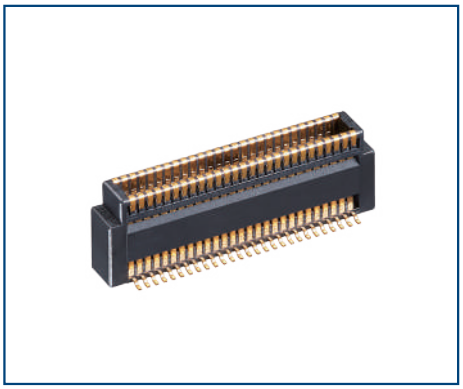

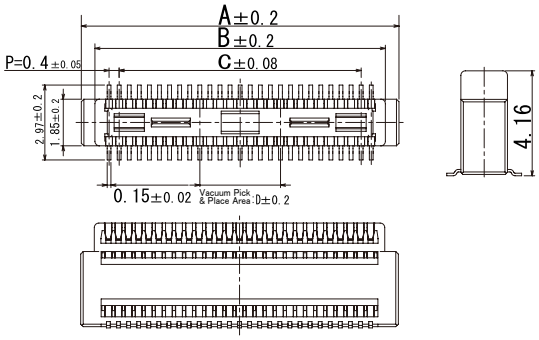

●Recommended PCB Layout

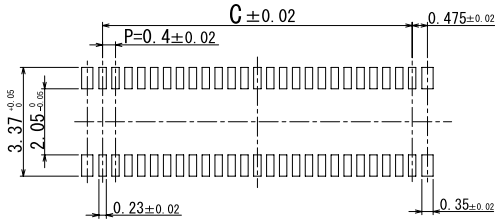

Recommended Metal Mask Thickness: 0.12mm, Open Area Ratio : 80%

Unit : mm

Part No.	HRS No.	No. of Pos.	A	B	C	D	Purchase Unit
DF40TC(3.0)-10DP-0.4V(51)	CL0684-0033-0-51	10	4.60	3.52	1.60	1.00	2,000pcs per reel
DF40TC(3.0)-50DP-0.4V(51)	CL0684-0078-0-51	50	12.60	11.50	9.60	3.20	

Note 1: Please order embossed tape packaged items by the reel.
Note 2: This connector has no polarity.

Aug.1.2026 Copyright 2026 HIROSE ELECTRIC CO., LTD. All Rights Reserved.

Downloaded from Arrow.com.

DF40T (125℃ Heat Resistant Standard Type) Receptacle (Stacking Height 1.5mm)

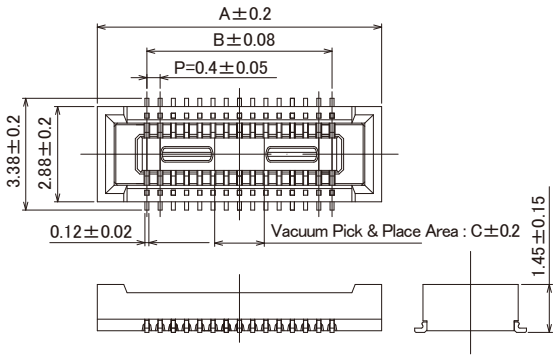

●Recommended PCB Pattern

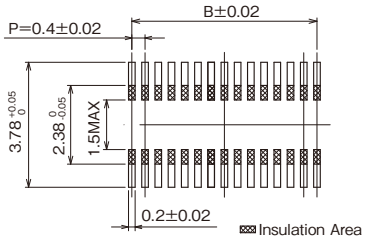

Recommended Metal Mask Thickness: 0.12mm, Aperture Ratio : 80%

Unit : mm

Part No.	HRS No.	No. of Pos.	A	B	C	Purchase Unit
DF40TB-10DS-0.4V(51)	CL0684-4273-0-51	10	4.6	1.6	1.0	5,000pcs per reel
DF40TC-20DS-0.4V(51)	Under Planning	20	6.6	3.6	1.0	
DF40TC-30DS-0.4V(51)	CL0684-4261-0-51	30	8.6	5.6	1.5	
DF40TC-34DS-0.4V(51)	CL0684-4240-0-51	34	9.4	6.4	2.3	
DF40TC-40DS-0.4V(51)	CL0684-4272-0-51	40	10.6	7.6	3.2	
DF40TC-50DS-0.4V(51)	CL0684-4249-0-51	50	12.6	9.6	3.2	
DF40TC-60DS-0.4V(51)	CL0684-4270-0-51	60	14.6	11.6	3.2	
DF40TC-100DS-0.4V(51)	CL0684-4292-0-51	100	22.6	19.6	3.2	
DF40TC-120DS-0.4V(88)	CL0684-4296-0-88	120	26.6	23.6	3.2	

Note 1: Please order embossed tape packaged items by the reel.
Note 2: This connector has no polarity.

Aug.1.2026 Copyright 2026 HIROSE ELECTRIC CO., LTD. All Rights Reserved.

Downloaded from Arrow.com.

DF40T (125℃ Heat Resistant Standard Type) Receptacle (Stacking Height 2.0mm)

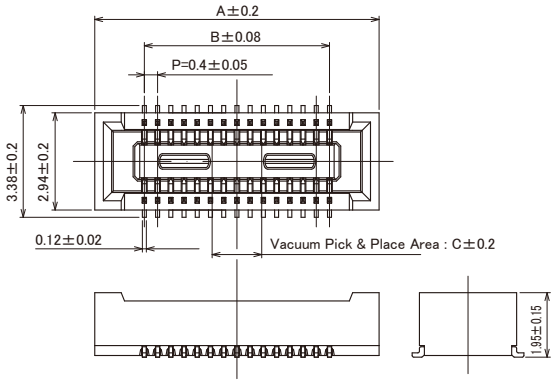

●Recommended PCB Pattern

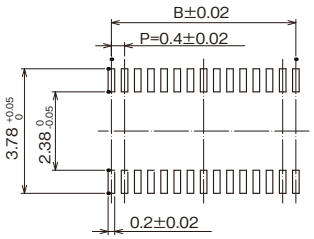

Recommended Metal Mask Thickness: 0.12mm, Aperture Ratio : 80%

Unit : mm

Part No.	HRS No.	No. of Pos.	A	B	C	Purchase Unit
DF40TC(2.0)-20DS-0.4V(51)	CL0684-4241-0-51	20	6.6	3.6	1.0	4,000pcs per reel
DF40TC(2.0)-24DS-0.4V(51)	CL0684-4243-0-51	24	7.4	4.4	1.2	
DF40TC(2.0)-30DS-0.4V(51)	CL0684-4265-0-51	30	8.6	5.6	1.5	
DF40TC(2.0)-40DS-0.4V(51)	Under Planning	40	10.6	7.6	3.2	
DF40TC(2.0)-80DS-0.4V(51)	CL0684-4310-0-51	80	18.6	15.6	3.2	

Note 1: Please order embossed tape packaged items by the reel.
Note 2: This connector has no polarity.

Aug.1.2026 Copyright 2026 HIROSE ELECTRIC CO., LTD. All Rights Reserved.

Downloaded from Arrow.com.

DF40T (125℃ Heat Resistant Standard Type) Receptacle (Stacking Height 2.5mm to 4.0mm)

●Stacking Height 2.5mm

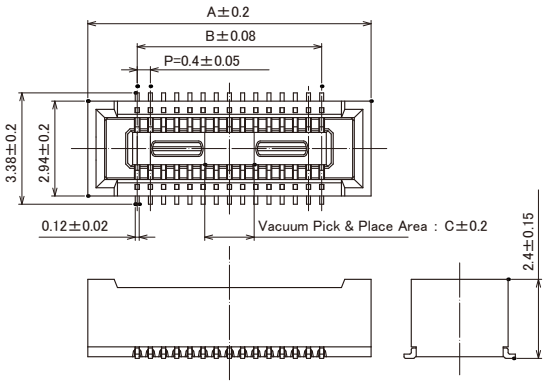

●Recommended PCB Pattern

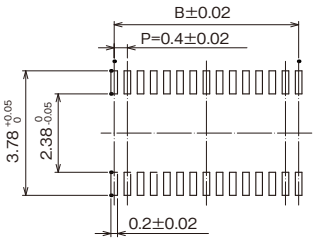

Recommended Metal Mask Thickness: 0.12mm, Open Area Ratio : 80%

Unit : mm

Part No.	HRS No.	No. of Pos.	A	B	C	Purchase Unit
DF40TC(2.5)-20DS-0.4V(51)	CL0684-4280-0-51	20	6.6	3.6	1.0	3,000pcs per reel
DF40TC(2.5)-30DS-0.4V(51)	CL0684-4266-0-51	30	8.6	5.6	1.5	
DF40TC(2.5)-40DS-0.4V(51)	Under Planning	40	10.6	7.6	3.2	
DF40TC(2.5)-50DS-0.4V(51)	CL0684-4279-0-51	50	12.6	9.6	3.2	

Note 1: Please order embossed tape packaged items by the reel.
Note 2: This connector has no polarity.

Aug.1.2026 Copyright 2026 HIROSE ELECTRIC CO., LTD. All Rights Reserved.

Downloaded from Arrow.com.

●Stacking Height 3.0mm

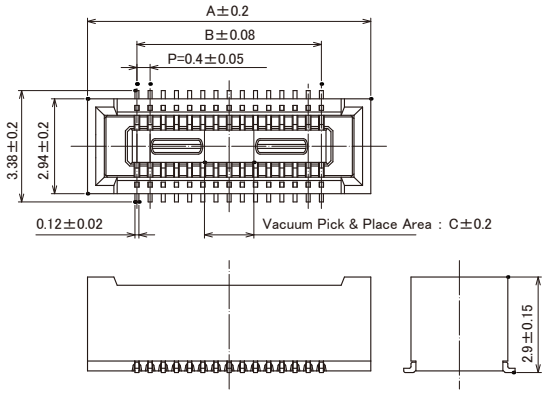

●Recommended PCB Pattern

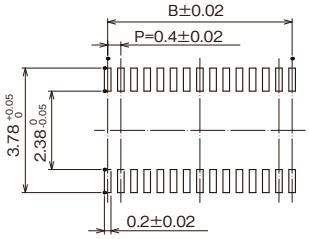

Recommended Metal Mask Thickness: 0.12mm, Open Area Ratio : 80%

Unit : mm

Part No.	HRS No.	No. of Pos.	A	B	C	Purchase Unit
DF40TC(3.0)-20DS-0.4V(51)	CL0684-4275-0-51	20	6.6	3.6	1.0	3,000pcs per reel
DF40TC(3.0)-30DS-0.4V(51)	CL0684-4242-0-51	30	8.6	5.6	1.5	
DF40TC(3.0)-40DS-0.4V(51)	CL0684-4276-0-51	40	10.6	7.6	3.2	

Note 1: Please order embossed tape packaged items by the reel.
Note 2: This connector has no polarity.

Aug.1.2026 Copyright 2026 HIROSE ELECTRIC CO., LTD. All Rights Reserved.

Downloaded from Arrow.com.

●Stacking Height 3.5mm

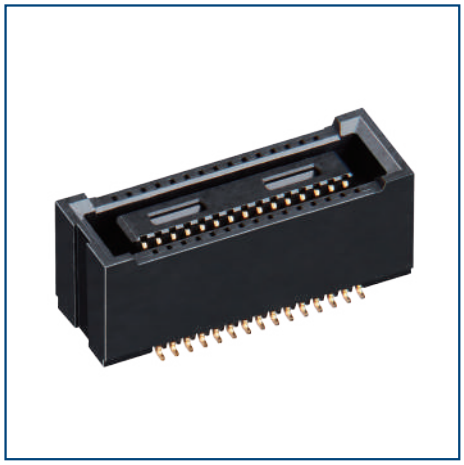

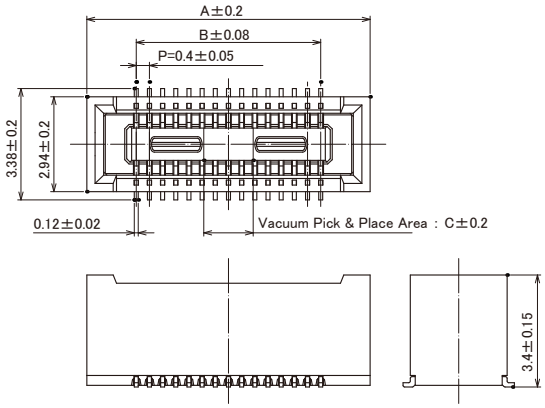

●Recommended PCB Pattern

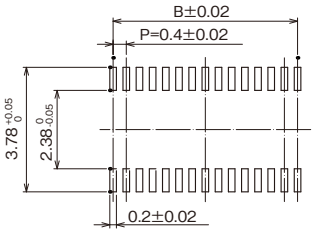

Recommended Metal Mask Thickness: 0.12mm, Open Area Ratio : 80%

Unit : mm

Part No.	HRS No.	No. of Pos.	A	B	C	Purchase Unit
DF40TB(3.5)-10DS-0.4V(51)	CL0684-4311-0-51	10	4.6	1.6	1.0	2,000pcs per reel
DF40TC(3.5)-20DS-0.4V(51)	CL0684-4253-0-51	20	6.6	3.6	1.0	
DF40TC(3.5)-30DS-0.4V(51)	CL0684-4237-0-51	30	8.6	5.6	1.5	
DF40TC(3.5)-40DS-0.4V(51)	CL0684-4254-0-51	40	10.6	7.6	3.2	
DF40TC(3.5)-60DS-0.4V(51)	CL0684-4247-0-51	60	14.6	11.6	3.2	

Note 1: Please order embossed tape packaged items by the reel.
Note 2: This connector has no polarity.

Aug.1.2026 Copyright 2026 HIROSE ELECTRIC CO., LTD. All Rights Reserved.

Downloaded from Arrow.com.

●Stacking Height 4.0mm

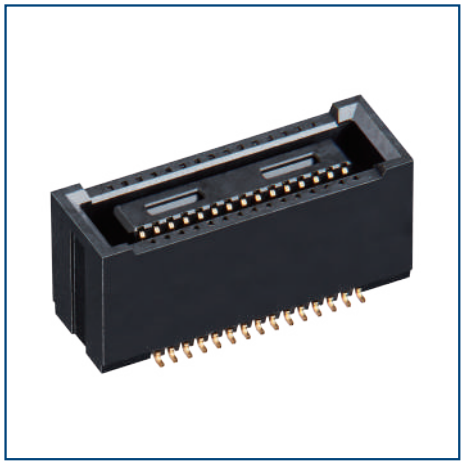

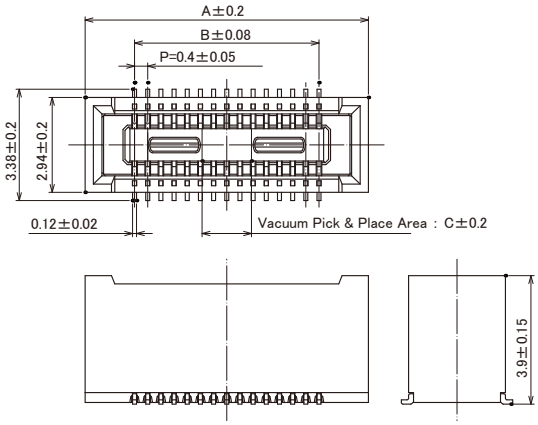

●Recommended PCB Pattern

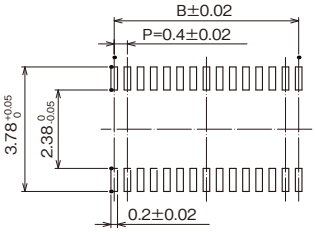

Recommended Metal Mask Thickness: 0.12mm, Open Area Ratio : 80%

Unit : mm

Part No.	HRS No.	No. of Pos.	A	B	C	Purchase Unit
DF40TC(4.0)-20DS-0.4V(51)	CL0684-4258-0-51	20	6.6	3.6	1.0	2,000pcs per reel
DF40TC(4.0)-30DS-0.4V(51)	CL0684-4256-0-51	30	8.6	5.6	1.5	
DF40TC(4.0)-40DS-0.4V(51)	CL0684-4259-0-51	40	10.6	7.6	3.2	
DF40TC(4.0)-50DS-0.4V(51)	CL0684-4297-0-51	50	12.6	9.6	3.2	

Note 1: Please order embossed tape packaged items by the reel.
Note 2: This connector has no polarity.

Aug.1.2026 Copyright 2026 HIROSE ELECTRIC CO., LTD. All Rights Reserved.

Downloaded from Arrow.com.

DF40GT (125℃ Heat Resistant With Shield Type) Plug

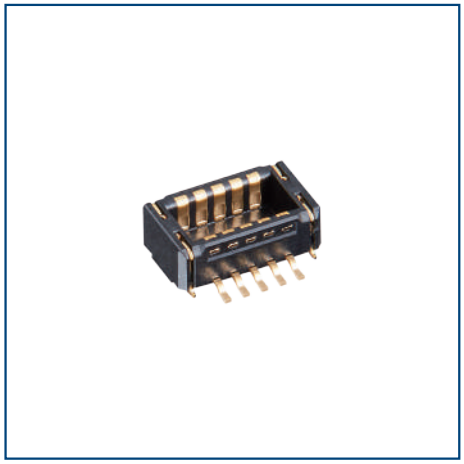

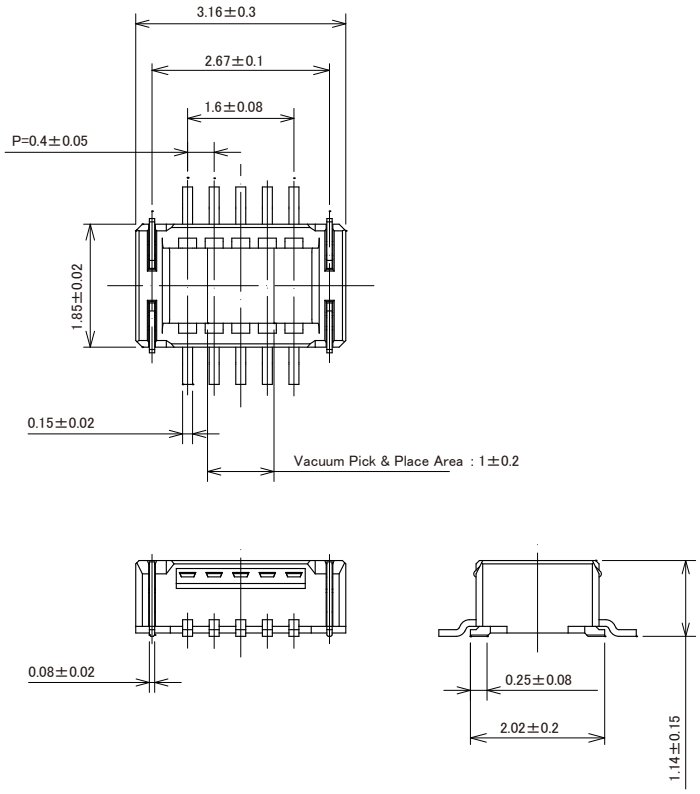

●Recommended PCB Pattern

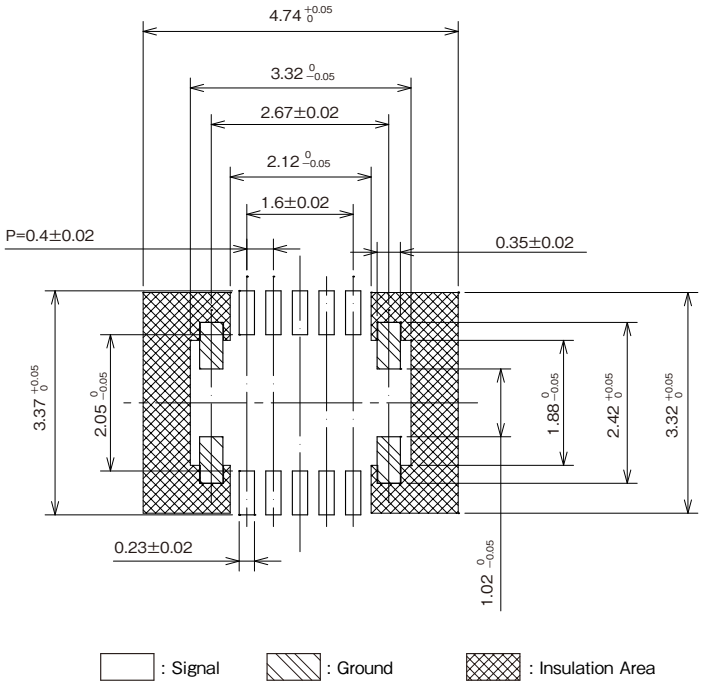

Recommended Metal Mask Thickness: 0.12mm, Aperture Ratio : 80%

Part No.	HRS No.	No. of Pos.	Purchase Unit
DF40GT-10DP-0.4V(51)	CL0684-4260-0-51	10	5,000pcs per reel

Note 1: Please order embossed tape packaged items by the reel.
Note 2: This connector has no polarity.

Aug.1.2026 Copyright 2026 HIROSE ELECTRIC CO., LTD. All Rights Reserved.

Downloaded from Arrow.com.

DF40GT (125℃ Heat Resistant With Shield Type) Receptacle

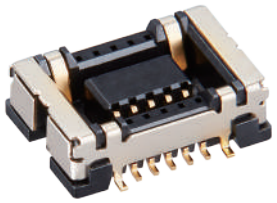

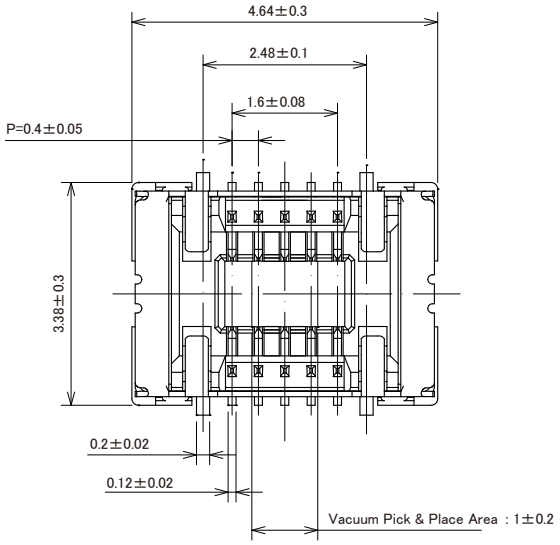

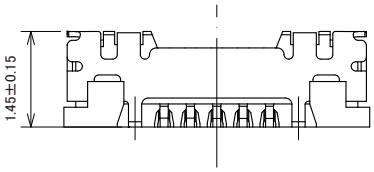

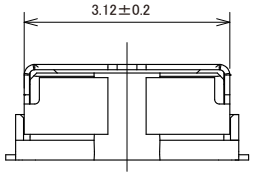

●Recommended PCB Pattern

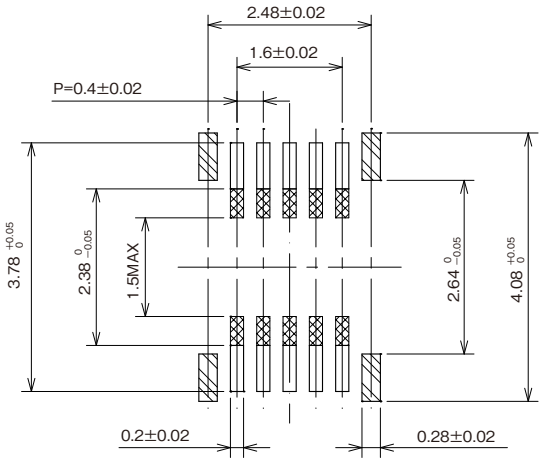

: Signal : Ground : Insulation Area

Recommended Metal Mask Thickness: 0.12mm, Open Area Ratio : 80%

Part No.	HRS No.	No. of Pos.	Purchase Unit
DF40GT(1.5)-10DS-0.4V(51)	CL0684-4248-0-51	10	5,000pcs per reel

Note 1: Please order embossed tape packaged items by the reel.
Note 2: This connector has no polarity.

Aug.1.2026 Copyright 2026 HIROSE ELECTRIC CO., LTD. All Rights Reserved.

Downloaded from Arrow.com.

Packaging Specifications Diagram (JIS C 0806, IEC 60286 -3 Compliant)

■ DF40T (125℃ Heat Resistant Standard Type)

Plug

●Stacking Height 1.5 to 4.0mm

Embossed Tape Dimensions

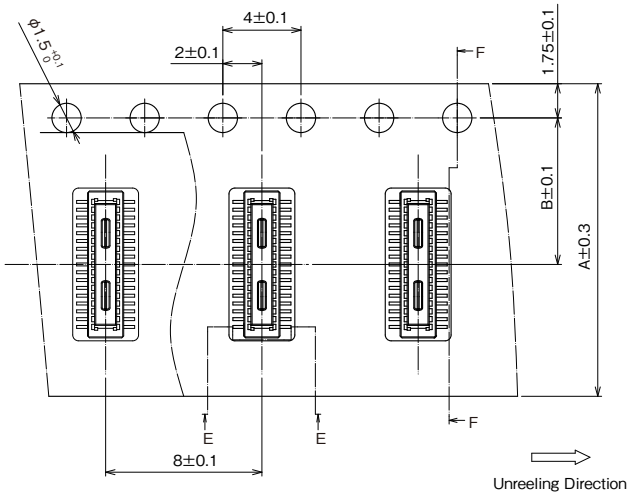

F-F

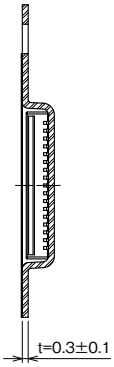

Reel Dimensions

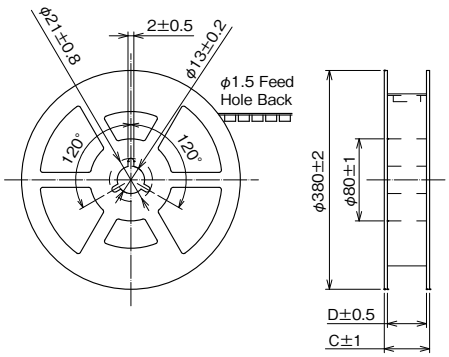

E-E

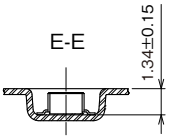

Unit : mm

Part No.	HRS No.	A	B	C	D	Purchase Unit
DF40TC-10DP-0.4V(51)	CL0684-4269-0-51	12	5.5	17.5	13.5	5,000pcs per reel
DF40TC-20DP-0.4V(51)	CL0684-4262-0-51	16	7.5	21.5	17.5	
DF40TC-24DP-0.4V(51)	CL0684-4308-0-51	16	7.5	21.5	17.5	
DF40TC-30DP-0.4V(51)	CL0684-4263-0-51	16	7.5	21.5	17.5	
DF40TC-34DP-0.4V(51)	CL0684-4255-0-51	24	11.5	29.5	25.5	
DF40TC-40DP-0.4V(51)	CL0684-4264-0-51	24	11.5	29.5	25.5	
DF40TC-50DP-0.4V(51)	CL0684-4268-0-51	24	11.5	29.5	25.5	
DF40TC-60DP-0.4V(51)	CL0684-4281-0-51	24	11.5	29.5	25.5	
DF40TC-80DP-0.4V(51)	CL0684-4289-0-51	32	14.2	37.4	33.4	
DF40TC-100DP-0.4V(51)	CL0684-4291-0-51	44	20.2	49.5	45.5	
DF40TC-120DP-0.4V(88)	CL0684-4295-0-88	44	20.2	49.5	45.5	

Note: The hole of the carrier tape for 10 to 60pos. will be only one side.

Aug.1.2026 Copyright 2026 HIROSE ELECTRIC CO., LTD. All Rights Reserved.

Downloaded from Arrow.com.

Plug

●Stacking Height 4.5 to 7.0mm

Embossed Tape Dimensions

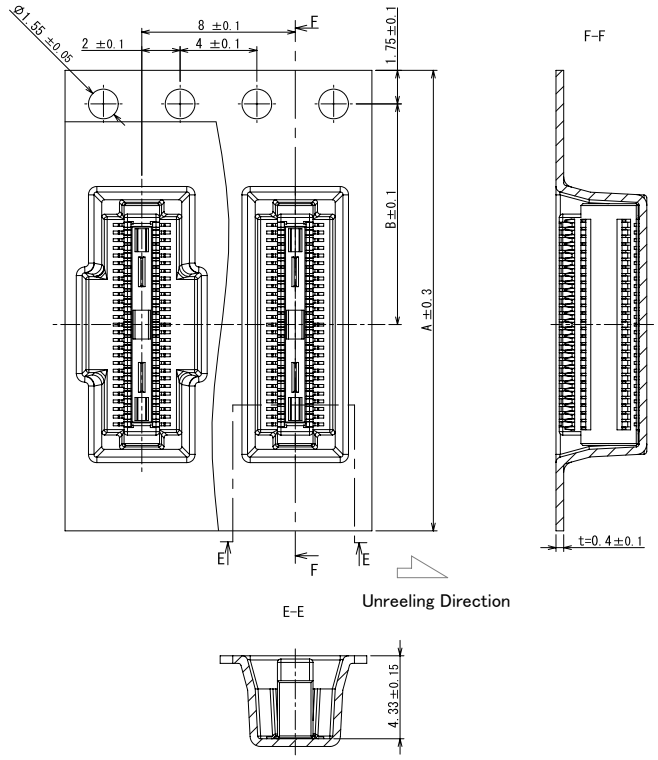

Reel Dimensions

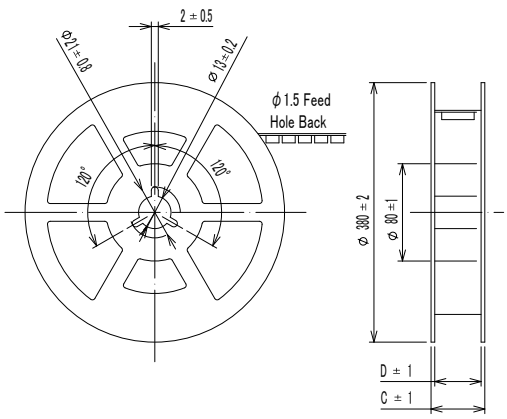

Unit : mm

Part No.	HRS No.	A	B	C	D	Purchase Unit
DF40TC(3.0)-10DP-0.4V(51)	CL0684-0033-0-51	16	7.5	21.4	17.4	2,000pcs per reel
DF40TC(3.0)-50DP-0.4V(51)	CL0684-0078-0-51	24	11.5	31.4	25.4	

Aug.1.2026 Copyright 2026 HIROSE ELECTRIC CO., LTD. All Rights Reserved.

Downloaded from Arrow.com.

Receptacle

●Stacking Height 1.5 to 3.0mm

Embossed Tape Dimensions

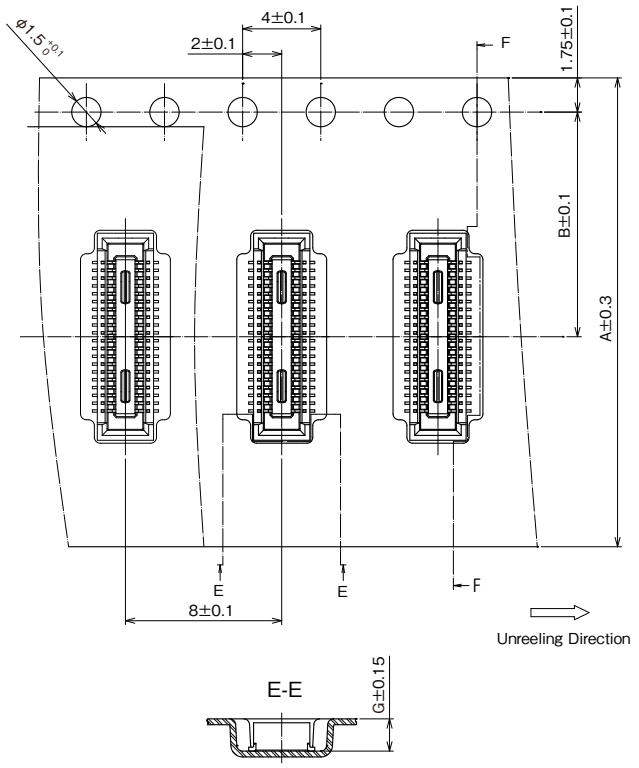

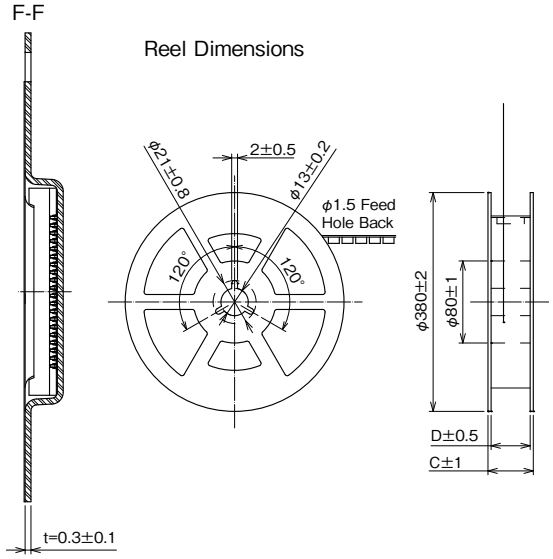

●Stacking Height 3.5 to 4.0mm

Embossed Tape Dimensions

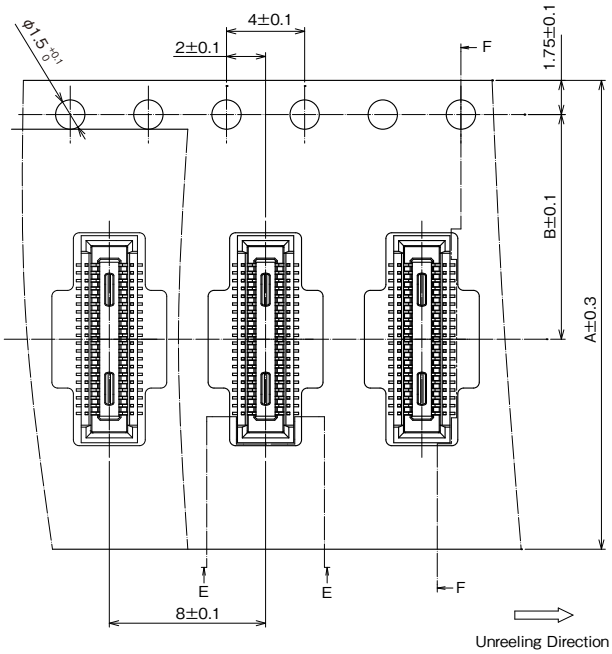

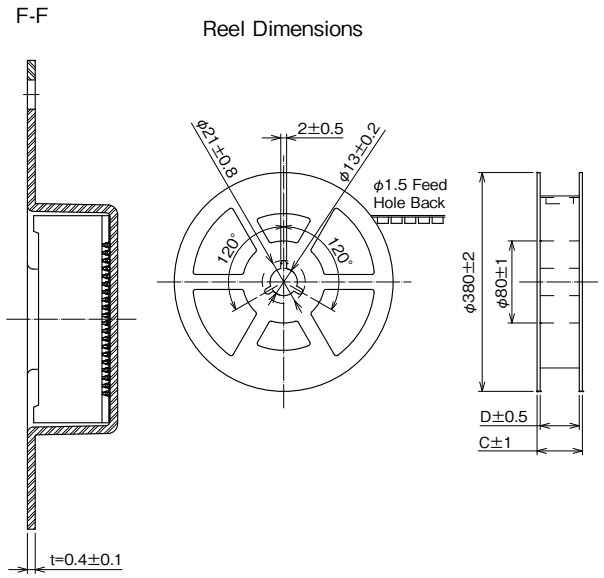

Aug.1.2026 Copyright 2026 HIROSE ELECTRIC CO., LTD. All Rights Reserved.

Downloaded from Arrow.com.

Aug.1.2026 Copyright 2026 HIROSE ELECTRIC CO., LTD. All Rights Reserved.

● Stacking Height 1.5mm

Unit : mm

Part No.	HRS No.	A	B	C	D	G	Purchase Unit
DF40TB-10DS-0.4V(51)	CL0684-4273-0-51	16	7.5	21.5	17.5	1.65	5,000pcs per reel
DF40TC-20DS-0.4V(51)	Under Planning	16	7.5	21.5	17.5	1.65	
DF40TC-30DS-0.4V(51)	CL0684-4261-0-51	24	11.5	29.5	25.5	1.65	
DF40TC-34DS-0.4V(51)	CL0684-4240-0-51	24	11.5	29.5	25.5	1.65	
DF40TC-40DS-0.4V(51)	CL0684-4272-0-51	24	11.5	29.5	25.5	1.65	
DF40TC-50DS-0.4V(51)	CL0684-4249-0-51	24	11.5	29.5	25.5	1.65	
DF40TC-60DS-0.4V(51)	CL0684-4270-0-51	24	11.5	29.5	25.5	1.65	
DF40TC-100DS-0.4V(51)	CL0684-4292-0-51	44	20.2	49.5	45.5	1.65	
DF40TC-120DS-0.4V(88)	CL0684-4296-0-88	44	20.2	49.5	45.5	1.65	

Note: The hole of the carrier tape for 10 to 60pos. will be only one side.

● Stacking Height 2.0mm

Unit : mm

Part No.	HRS No.	A	B	C	D	G	Purchase Unit
DF40TC(2.0)-20DS-0.4V(51)	CL0684-4241-0-51	16	7.5	21.5	17.5	2.2	4,000pcs per reel
DF40TC(2.0)-24DS-0.4V(51)	CL0684-4243-0-51	16	7.5	21.5	17.5	2.2	
DF40TC(2.0)-30DS-0.4V(51)	CL0684-4265-0-51	24	11.5	29.5	25.5	2.2	
DF40TC(2.0)-40DS-0.4V(51)	Under Planning	24	11.5	29.5	25.5	2.2	
DF40TC(2.0)-80DS-0.4V(51)	CL0684-4310-0-51	32	14.2	37.4	33.4	2.2	

● Stacking Height 2.5mm

Unit : mm

Part No.	HRS No.	A	B	C	D	G	Purchase Unit
DF40TC(2.5)-20DS-0.4V(51)	CL0684-4280-0-51	16	7.5	21.5	17.5	2.72	3,000pcs per reel
DF40TC(2.5)-30DS-0.4V(51)	CL0684-4266-0-51	24	11.5	29.5	25.5	2.72	
DF40TC(2.5)-40DS-0.4V(51)	Under Planning	24	11.5	29.5	25.5	2.72	
DF40TC(2.5)-50DS-0.4V(51)	CL0684-4279-0-51	24	11.5	29.5	25.5	2.72	

● Stacking Height 3.0mm

Unit : mm

Part No.	HRS No.	A	B	C	D	G	Purchase Unit
DF40TC(3.0)-20DS-0.4V(51)	CL0684-4275-0-51	16	7.5	21.5	17.5	3.15	3,000pcs per reel
DF40TC(3.0)-30DS-0.4V(51)	CL0684-4242-0-51	24	11.5	29.5	25.5	3.15	
DF40TC(3.0)-40DS-0.4V(51)	CL0684-4276-0-51	24	11.5	29.5	25.5	3.15	

Downloaded from Arrow.com.

●Stacking Height 3.5mm

Unit : mm

Part No.	HRS No.	A	B	C	D	G	Purchase Unit
DF40TB(3.5)-10DS-0.4V(51)	CL0684-4311-0-51	16	7.5	21.5	17.4	3.72	2,000pcs per reel
DF40TC(3.5)-20DS-0.4V(51)	CL0684-4253-0-51	16	7.5	21.5	17.5	3.72	
DF40TC(3.5)-30DS-0.4V(51)	CL0684-4237-0-51	24	11.5	29.5	25.5	3.72	
DF40TC(3.5)-40DS-0.4V(51)	CL0684-4254-0-51	24	11.5	29.5	25.5	3.72	
DF40TC(3.5)-60DS-0.4V(51)	CL0684-4247-0-51	24	11.5	29.4	25.4	3.72	

●Stacking Height 4.0mm

Unit : mm

Part No.	HRS No.	A	B	C	D	G	Purchase Unit
DF40TC(4.0)-20DS-0.4V(51)	CL0684-4258-0-51	16	7.5	21.5	17.5	4.22	2,000pcs per reel
DF40TC(4.0)-30DS-0.4V(51)	CL0684-4256-0-51	24	11.5	29.5	25.5	4.22	
DF40TC(4.0)-40DS-0.4V(51)	CL0684-4259-0-51	24	11.5	29.5	25.5	4.22	
DF40TC(4.0)-50DS-0.4V(51)	CL0684-4297-0-51	24	11.5	29.5	25.5	4.22	

Aug.1.2026 Copyright 2026 HIROSE ELECTRIC CO., LTD. All Rights Reserved.

Downloaded from Arrow.com.

■ DF40GT (125℃ Heat Resistant Standard Type)

Plug

Embossed Tape Dimensions

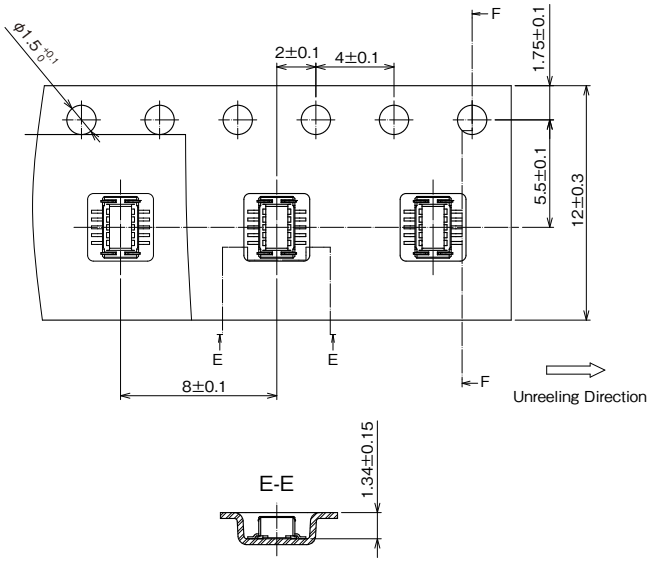

F-F

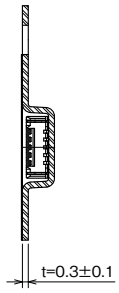

Reel Dimensions

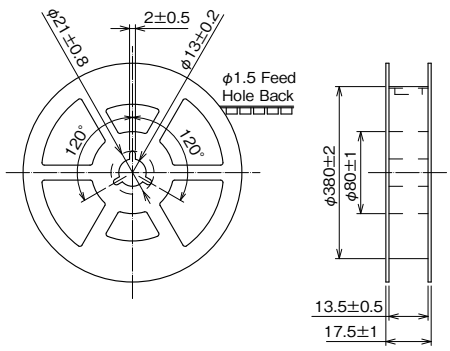

Part No.	HRS No.	No. of Pos.	Purchase Unit
DF40GT-10DP-0.4V(51)	CL0684-4260-0-51	10	5,000pcs per reel

Receptacle

Embossed Tape Dimensions

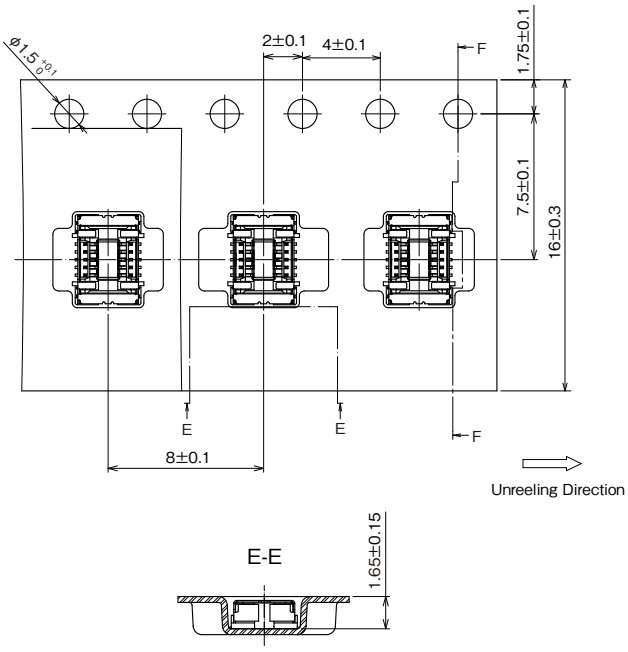

F-F

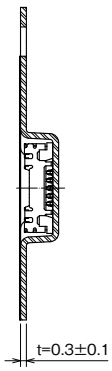

Reel Dimensions

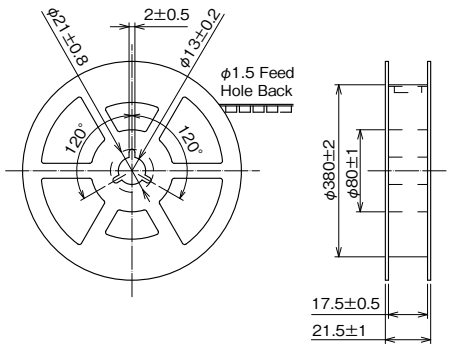

Part No.	HRS No.	No. of Pos.	Purchase Unit
DF40GT(1.5)-10DS-0.4V(51)	CL0684-4248-0-51	10	5,000pcs per reel

Aug.1.2026 Copyright 2026 HIROSE ELECTRIC CO., LTD. All Rights Reserved.

Downloaded from Arrow.com.

Precautions

Recommended Temperature Profile	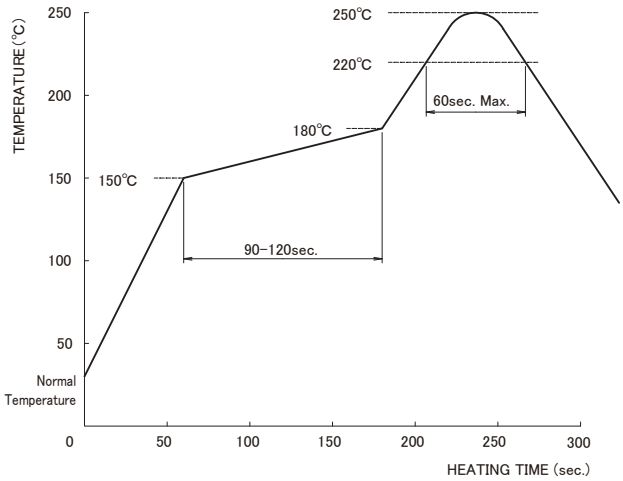 【Conditions】 1. Peak Temperature : 250°C 2. Heating : 220°C Min. for 60 sec. Max. 3. Preheating : 150 to 180°C, 90 to 120 sec. 4. Number of Reflow Cycles : 2 cycles Max. ＊Temperature refers to the surface temperature of the board near the connector lead. We recommend reflow mounting in a nitrogen environment.
Recommended Manual Soldering Conditions	Soldering iron temperature: 340 ± 10℃ , Soldering Time: Within 3 sec.
Recommended Metal Mask Thickness and Open Area to PCB Pattern (Area Ratio)	Thickness: 0.12mm, Aperture Ratio: DS 80% DP 80%
Board Warpage	Max. of 0.02mm at the center in reference to both ends of the connector
Cleaning	Cleaning is not recommended. If you clean this product, please evaluate its performance before using it. (Cleaning may impair the mating/unmating properties and lower resistance to environmental factors.)
Precautions	・Be careful when mating/unmating the connector when it is not mounted on the PCB as it may cause damage/deformation to contacts. ・Avoid supporting the PCB only with the connectors. Support it by other means such as bolts, screws, posts, etc. ・Excessive prying during unmating/mating may result in damage. ・In the case of hand soldering, please do not apply any flux which could cause flux wicking. ・This product may have slight color differences due to production lot variability, but this does not affect the performance. ・Please refer to the following page for handling precautions when inserting and removing. ・Because the product can disengage if dropped (or other impact), or by FPC routing, it is advised to secure the mated connectors to the board with housings and cushioning materials. ・Do not use the connector in non-recommended conditions (i.e., rated current, rated voltage, PCB design and operating environment, etc.). Such usage could lead to material outgassing, ignition, or short-circuit, etc. Refer to the specifications and guidelines for board pattern dimensions, board cautions, and connector treatment. Please contact Hirose if connector usage in conditions other than those described in the specifications and the guidelines is being considered.

Aug.1.2026 Copyright 2026 HIROSE ELECTRIC CO., LTD. All Rights Reserved.

Downloaded from Arrow.com.

Precautions for Handling During Use

【Mating Method of Connector】

When Mating this Item, please do so by hand.

Mating Method

1. Locate the guide port and align. This product has a guide rib on the plug to ensure proper engagement.
   Once aligned, the connector engages. You can feel the mated height of the connector lower.

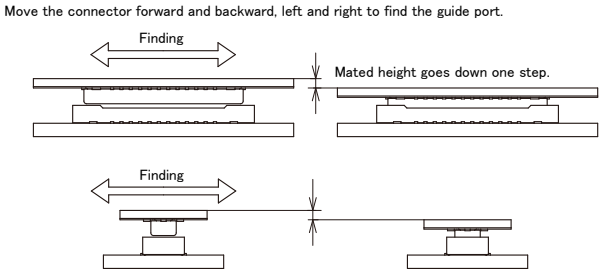

2. In the engaged state, the connectors are parallel to each other, and the connectors cannot move forward, backward, left, or right. Complete mating from this state.

3. Check that mating is completed.
   If one side is floating, or if it is mated at a diagonal, remove and re-mate.

【Handling Precautions for Connector Removal】

1. When removing the connector, it is preferable to pull it out in the upward direction from the connector mounting surface.
   However, when removing the FPC from the circuit board it becomes more difficult to remove it vertically with higher pin counts and thin FPCs.

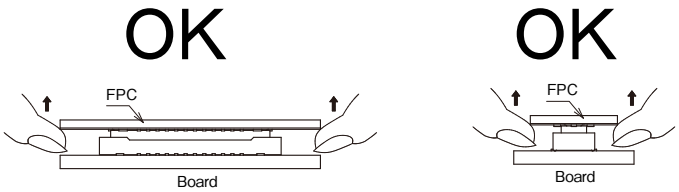

2. If difficult to remove, extract the connector diagonally in the direction of the pitch.
   Note that removal from the widthwise side will apply a large load to the contacts.

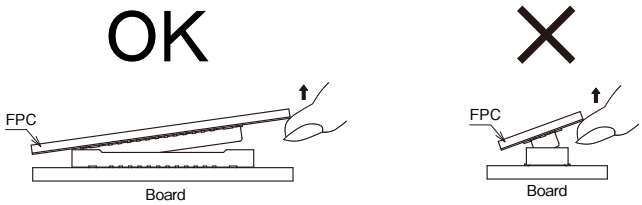

Aug.1.2026 Copyright 2026 HIROSE ELECTRIC CO., LTD. All Rights Reserved.

Downloaded from Arrow.com.

3. If the FPC does not have sufficient rigidity, solder stripping or connector breakage may occur.
   Please use it after checking the repetitive operation with a flexible board in advance, such as during a trial manufacture run.
   Refrain from holding the corner of the flexible board and removing it diagonally as it will result in a large load to the contacts.

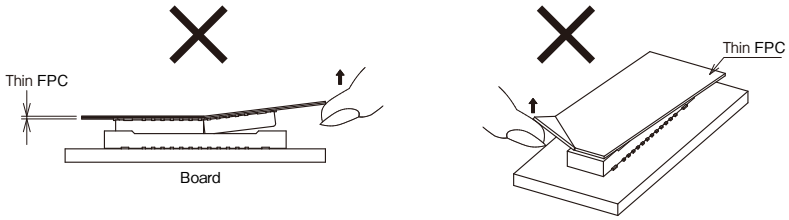

Aug.1.2026 Copyright 2026 HIROSE ELECTRIC CO., LTD. All Rights Reserved.

While Taking into Consideration

Specifications mentioned in this catalog are reference values.
When considering to order or use this product, please review the Drawing and Product Specifications sheets.
Use an appropriate cable when using the connector in combination with cables.
If considering usage of a non-specified cable, please contact your sales representative.
If assembly process is done by jigs & tools which are not identified by Hirose, the warranty of the product may be affected.
If considering usage for below mentioned applications, please contact your sales representative.
In cases where the application will demand a high level of reliability, such as automotive, medical instruments, public infrastructure, aerospace/defense etc. Hirose must review before assurance of reliability can be given.

HIROSE ELECTRIC CO.,LTD. 2-6-3,Nakagawa Chuoh,Tsuzuki-Ku,Yokohama-Shi 224-8540,JAPAN
https://www.hirose.com

※The contents of this catalog are current as of date of 1/2026. Contents are subject to change without notice for the purpose of improvements.
※The HRS logo and "HIROSE" are trademarks of HIROSE ELECTRIC CO., LTD.

Downloaded from Arrow.com.

PRODUCT CATALOG

HIROSE ELECTRIC CO.,LTD.

DF40F Series

Small Floating Board-to-Board Connector, 125°C Heat Resistance for Automotive

Compact

Floating

High Temp

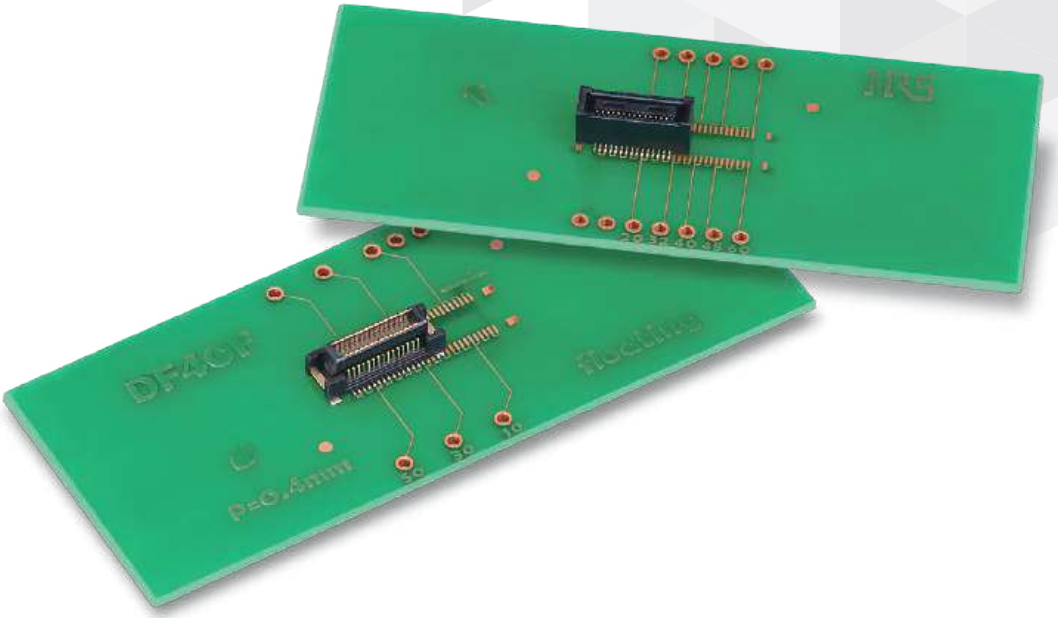

NEW

Product Page
https://www.hirose.com/en/product/series/DF40T

Dec. 2024

Aug.1.2026 Copyright 2026 HIROSE ELECTRIC CO., LTD. All Rights Reserved.

Downloaded from Arrow.com.

Features

1. 0.4mm Pitch, 3.68mm Width, Stacking Height 3.5 to 6.0mm World's Smallest Width Class in Floating Board-to-Board Connectors

It contributes to making board design space-saving. Significantly reduces the area occupied on mounting part.

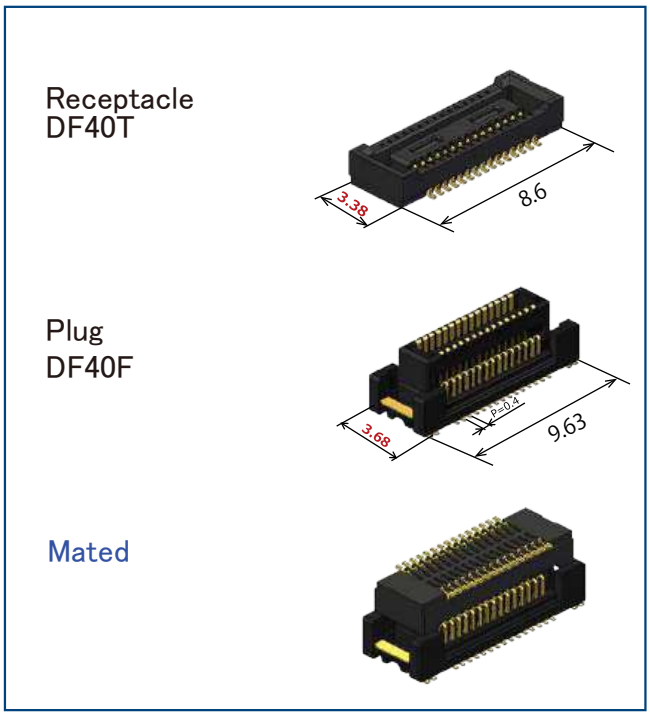

Small & Space-Saving (e.g. 30pos.)

2. Absorption of Misalignment

X and Y Directions :
Floating Range ±0.3mm

Z Direction :
Effective Mating Length
±0.25/0mm

The board mounting misalignment and misalignment due to board warpage can be absorbed by the connector.

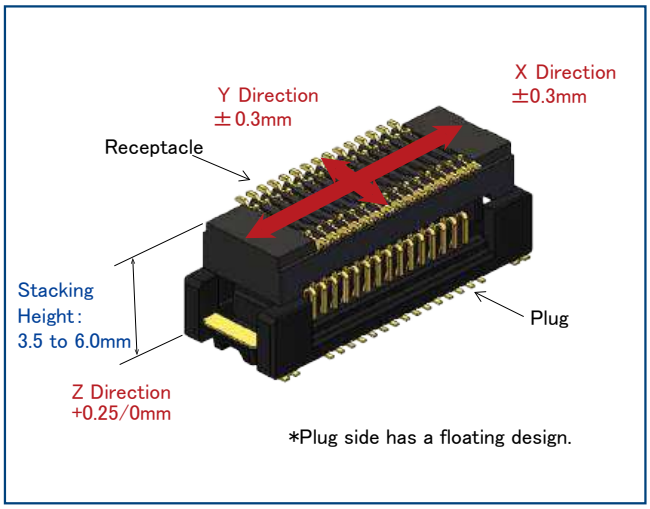

Large Floating Range & Effective Mating Length

Aug.1.2026 Copyright 2026 HIROSE ELECTRIC CO., LTD. All Rights Reserved.

Downloaded from Arrow.com.

3. Wide Variety of Stacking Heights by Mating Combination with DF40T

Plug DF40F and Receptacle DF40T are used in combination.
Stacking Height can be changed by changing receptacle side.

- DF40F : 1 Type
- DF40T : 6 Types

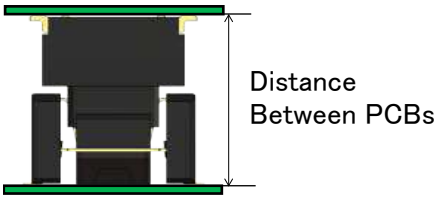

Unit : mm

Stacking Height	Distance Between PCBs
3.5	3.5 to 3.75mm
4.0	4.0 to 4.25mm
4.5	4.5 to 4.75mm
5.0	5.0 to 5.25mm
5.5	5.5 to 5.75mm
6.0	6.0 to 6.25mm

Stacking Height Variation

4. 125℃ Heat Resistance for Automotive Specifications

5. Supports High Speed Transmission

All heights support these standards.

PCI-ex Gen.4 (16Gbps)
- Pin Assign : GGGSSGSSGGG
- Reference Impedance : 85Ω

MIPI D-PHY Ver.1.1 (1.5Gbps)
- Pin Assign : GGSGSGSGSGG
- Reference Impedance : 100Ω

Aug.1.2026 Copyright 2026 HIROSE ELECTRIC CO., LTD. All Rights Reserved.

Downloaded from Arrow.com.

Applications

It can be used for in-vehicle applications for front cameras, Rear/Side Cameras, Millimeter-Wave Radar LiDAR and other devices that require misalignment absorption of the substrate by small size floating. It can also be used in devices that require absorption of the substrate misalignment for consumer and industrial equipment.

Product Specifications

Rated Current	0.3A	Operating Temperature (Note 1)(Note 2)	-55 to +125℃
Rated Voltage	30V AC/DC	Storage Temperature (Note 3)	-10 to +60℃

Item	Specifications	Conditions
Contact Resistance	90mΩ Max.	Measured at 20mV AC, 1kHz, 1mA
Insulation Resistance	50MΩ Min.	Measured at 100V DC
Withstanding Voltage	No Flashover or Breakdown	100V AC for 1 min.
Mating Durability	Contact Resistance : 90mΩ Max. No damage, cracks or part dislocation.	10 times
Vibration Resistance	There should be no electrical interruption of 1 μs Min. No damage, cracks or part dislocation.	Frequency 10 to 500Hz, Acceleration 49m/s^2 Swept speed 1oct/min 8 hours each of 3-axis direction
Heat Resistance	Contact Resistance : 90mΩ Max. No damage, cracks or part dislocation.	Left for 1000 hours at Temperature 125±2℃
Moisture Resistance	Contact Resistance : 90mΩ Max. Insulation Resistance : 25MΩ Min. No damage, cracks or part dislocation.	Temperature -10→+65℃, RH In 90 - 96% Left for 10 cycles (240 hours)
Temperature Cycles	Contact Resistance : 90mΩ Max. No damage, cracks or part dislocation.	Temperature -55℃ : 30min. →+125℃ : 30min., 1000 cycles (Tank transfer time : 2 to 3min.)
Solder Heat Resistance	No deformation in appearance or significant damage to contacts.	Reflow : According to the Recommended Temperature Profile Hand Soldering : 350℃ within 3 sec.

Note 1 : Includes the temperature rise due to current flow.
Note 2 : Use without condensation.
Note 3 : Storage refers to long-term storage of unused items before they are mounted on the PCB.
Operating temperature and humidity range apply when the product is not powered after PCB mounting and when temporarily stored during transportation.

Materials/Finish

Item	Component	Material	Color/Finish
Plug DF40F	Insulator	LCP	Black
	Contact	Copper Alloy	Gold Plating (Nickle Underplating)
	Retention Tab	Copper Alloy	Gold Plating (Nickle Underplating)
Receptacle DF40T	Insulator	LCP	Black
	Contact	Copper Alloy	Gold Plating (Nickle Underplating)

Aug.1.2026 Copyright 2026 HIROSE ELECTRIC CO., LTD. All Rights Reserved.

Downloaded from Arrow.com.

Product Number Structure

Refer to the chart below when determining the product specifications from the product number.
Please select from the product numbers listed in this catalog when placing orders.

■ Plug

DF40 F (2.0) - 30 DP - 0.4 V (51)
❶ ❷ ❸ ❹ ❺ ❻ ❼ ❽

■ Receptacle

DF40 TC (4.0) - 30 DS - 0.4 V (51)
❶ ❷ ❸ ❹ ❺ ❻ ❼ ❽

❶ Series Name	DF40	❺ Connector Type	DP : Double Row Plug DS : Double Row Receptacle
❷ Shape Symbol	F : Floating TC : No Retention Tab	❻ Contact Pitch	0.4mm
❸ Stacking Height	3.5, 4.0, 4.5, 5.0, 5.5, 6.0 mm Stacking Height is total value of (a) and (b) below. Plug (a) : 2.0 Receptacle (b) : 1.5, 2.0, 2.5, 3.0, 3.5, 4.0 (Note 1)	❼ Contact Type	V : Straight SMT
		❽ Packaging Type	(51) : Embossed Tape Packaging, DF40F 3,000pcs/reel DF40TC 5,000pcs/reel DF40TC(2.5) 3,000pcs/reel DF40TC(3.0) 3,000pcs/reel DF40TC(3.5) 2,000pcs/reel DF40TC(4.0) 2,000pcs/reel (53) : Embossed Tape Packaging, 500pcs/reel (For trial production)
❹ No. of Pos.	30		

Note 1 : (1.5) of the Receptacle will be blank. (e.g. : DF40TC-30DS-0.4V(51))

Aug.1.2026 Copyright 2026 HIROSE ELECTRIC CO., LTD. All Rights Reserved.

Downloaded from Arrow.com.

Combinations

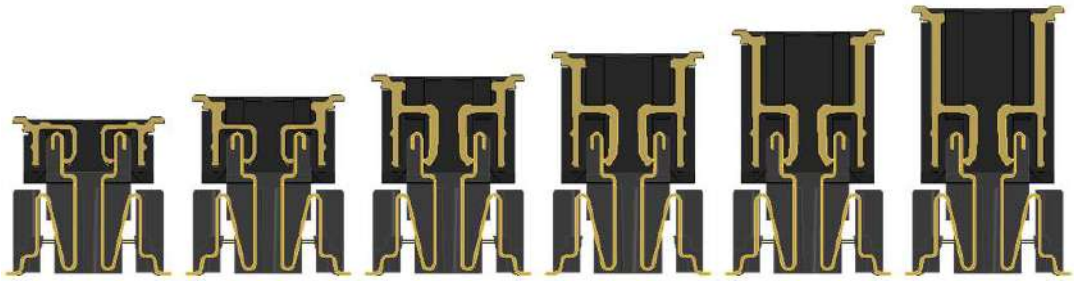

H=3.5mm H=4.0mm H=4.5mm H=5.0mm H=5.5mm H=6.0mm

Unit : mm

Receptacle/Plug	DF40F(2.0)-30DP-0.4V(##) Stacking Height
DF40TC-30DS-0.4V(##)	3.5
DF40TC(2.0)-30DS-0.4V(##)	4.0
DF40TC(2.5)-30DS-0.4V(##)	4.5
DF40TC(3.0)-30DS-0.4V(##)	5.0
DF40TC(3.5)-30DS-0.4V(##)	5.5
DF40TC(4.0)-30DS-0.4V(##)	6.0

Aug.1.2026 Copyright 2026 HIROSE ELECTRIC CO., LTD. All Rights Reserved.

Downloaded from Arrow.com.

DF40F (125℃ Heat Resistant Floating Type) Plug

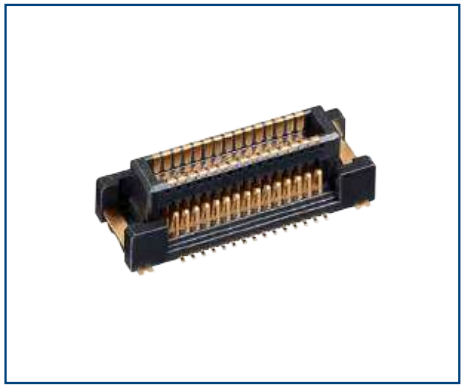

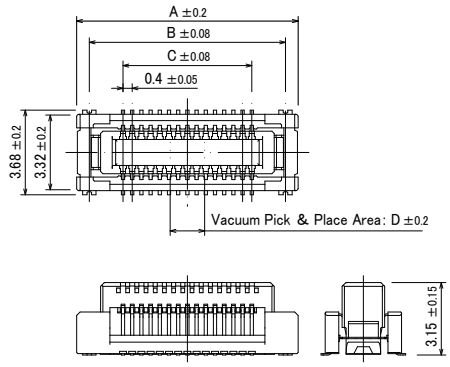

●Recommended PCB Layout

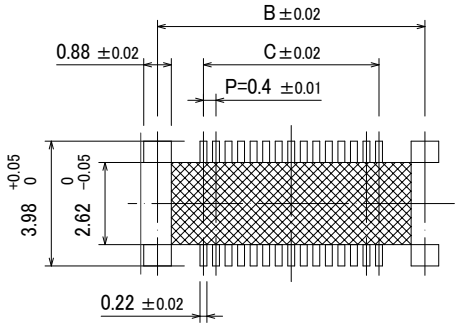

Pattern Prohibited Area

●Recommended Metal Mask Dimensions

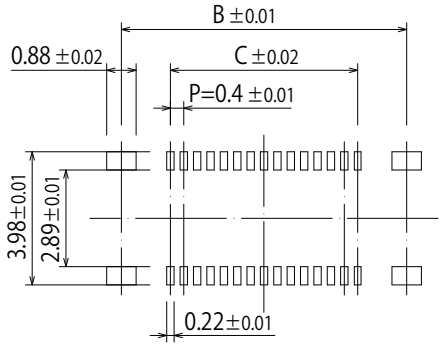

Recommended Metal Mask Thickness : 0.12mm, Open Area Ratio : 80%

Unit : mm

Part No.	HRS No.	No. of Pos.	A	B	C	D	Purchase Unit (##) : (51)	Purchase Unit (##) : (53)
DF40F(2.0)-30DP-0.4V(##)	CL0684-4501-0-##	30	9.63	8.53	5.6	1.5	3,000pcs per reel	500pcs per reel

Note : This connector has no polarity.

Aug.1.2026 Copyright 2026 HIROSE ELECTRIC CO., LTD. All Rights Reserved.

Downloaded from Arrow.com.

DF40T (125℃ Heat Resistant Standard Type) Receptacle (Stacking Height 3.5mm)

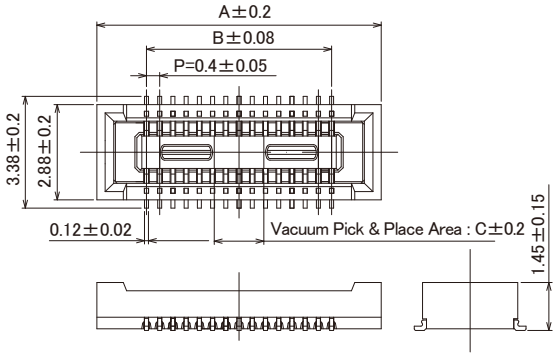

●Recommended PCB Layout

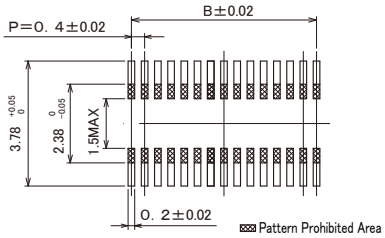

Recommended Metal Mask Thickness : 0.12mm, Open Area Ratio : 80%

Unit : mm

Part No.	HRS No.	No. of Pos.	A	B	C	Purchase Unit (##) : (51)	Purchase Unit (##) : (53)
DF40TC-30DS-0.4V(##)	CL0684-4261-0-##	30	8.6	5.6	1.5	5,000pcs per reel	500pcs per reel

Note : This connector has no polarity.

Aug.1.2026 Copyright 2026 HIROSE ELECTRIC CO., LTD. All Rights Reserved.

Downloaded from Arrow.com.

DF40T (125℃ Heat Resistant Standard Type) Receptacle (Stacking Height 4.0mm)

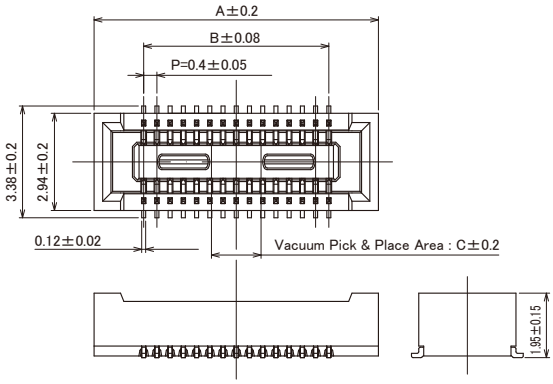

●Recommended PCB Layout

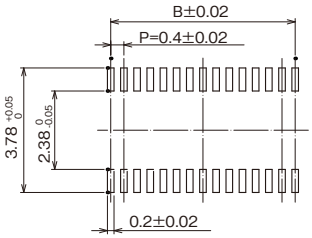

Recommended Metal Mask Thickness : 0.12mm, Open Area Ratio : 80%

Unit : mm

Part No.	HRS No.	No. of Pos.	A	B	C	Purchase Unit (##) : (51)	Purchase Unit (##) : (53)
DF40TC(2.0)-30DS-0.4V(##)	CL0684-4265-0-##	30	8.6	5.6	1.5	4,000pcs per reel	500pcs per reel

Note : This connector has no polarity.

Aug.1.2026 Copyright 2026 HIROSE ELECTRIC CO., LTD. All Rights Reserved.

Downloaded from Arrow.com.

DF40T (125℃ Heat Resistant Standard Type) Receptacle (Stacking Height 4.5 to 6.0mm)

●Stacking Height 4.5mm

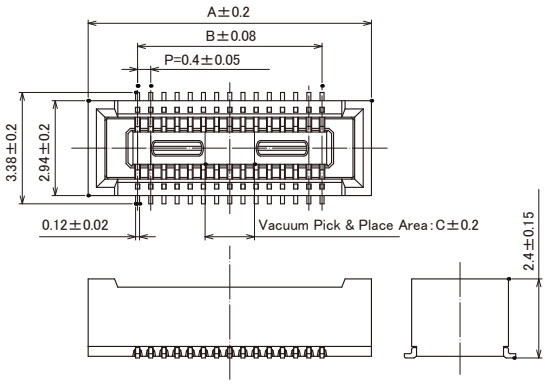

●Recommended PCB Layout

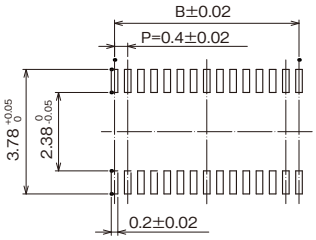

Recommended Metal Mask Thickness : 0.12mm, Open Area Ratio : 80%

Unit : mm

Part No.	HRS No.	No. of Pos.	A	B	C	Purchase Unit (##) : (51)	Purchase Unit (##) : (53)
DF40TC(2.5)-30DS-0.4V(##)	CL0684-4266-0-##	30	8.6	5.6	1.5	3,000pcs per reel	500pcs per reel

Note : This connector has no polarity.

Aug.1.2026 Copyright 2026 HIROSE ELECTRIC CO., LTD. All Rights Reserved.

Downloaded from Arrow.com.

●Stacking Height 5.0mm

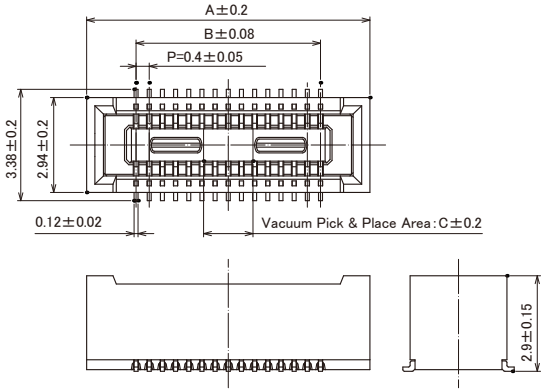

●Recommended PCB Layout

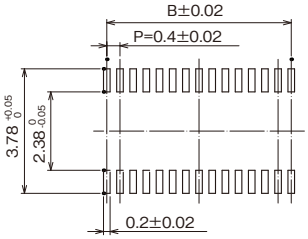

Recommended Metal Mask Thickness : 0.12mm, Open Area Ratio : 80%

Unit : mm

Part No.	HRS No.	No. of Pos.	A	B	C	Purchase Unit (##) : (51)	Purchase Unit (##) : (53)
DF40TC(3.0)-30DS-0.4V(##)	CL0684-4242-0-##	30	8.6	5.6	1.5	3,000pcs per reel	500pcs per reel

Note : This connector has no polarity.

Aug.1.2026 Copyright 2026 HIROSE ELECTRIC CO., LTD. All Rights Reserved.

Downloaded from Arrow.com.

●Stacking Height 5.5mm

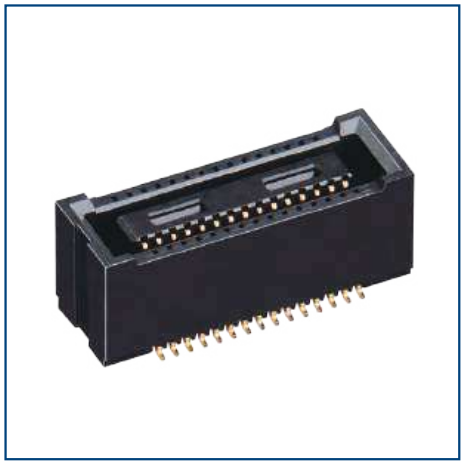

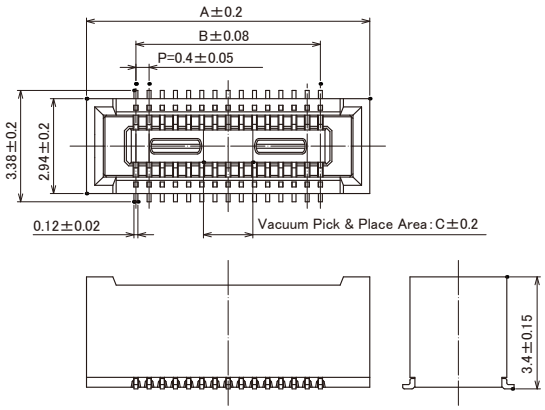

●Recommended PCB Layout

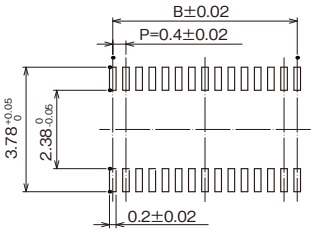

Recommended Metal Mask Thickness : 0.12mm, Open Area Ratio : 80%

Unit : mm

Part No.	HRS No.	No. of Pos.	A	B	C	Purchase Unit (##) : (51)	Purchase Unit (##) : (53)
DF40TC(3.5)-30DS-0.4V(##)	CL0684-4237-0-##	30	8.6	5.6	1.5	2,000pcs per reel	500pcs per reel

Note : This connector has no polarity.

Aug.1.2026 Copyright 2026 HIROSE ELECTRIC CO., LTD. All Rights Reserved.

Downloaded from Arrow.com.

●Stacking Height 6.0mm

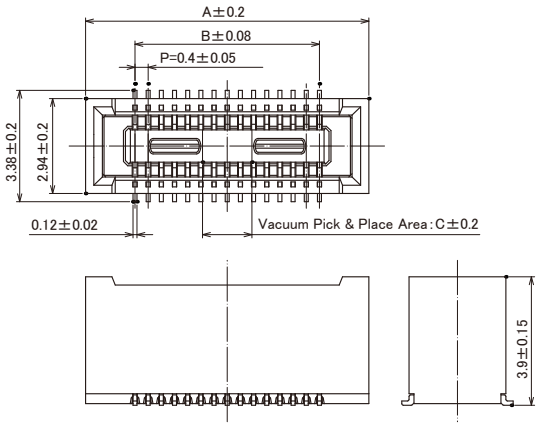

●Recommended PCB Layout

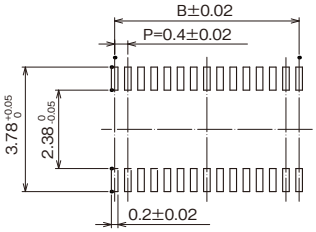

Recommended Metal Mask Thickness : 0.12mm, Open Area Ratio : 80%

Unit : mm

Part No.	HRS No.	No. of Pos.	A	B	C	Purchase Unit (##) : (51)	Purchase Unit (##) : (53)
DF40TC(4.0)-30DS-0.4V(##)	CL0684-4256-0-##	30	8.6	5.6	1.5	2,000pcs per reel	500pcs per reel

Note : This connector has no polarity.

Aug.1.2026 Copyright 2026 HIROSE ELECTRIC CO., LTD. All Rights Reserved.

Downloaded from Arrow.com.

Packaging Specifications Diagram (JIS C 0806, IEC 60286-3 Compliant)

■ DF40F Plug

Embossed Carrier Tape Dimensions

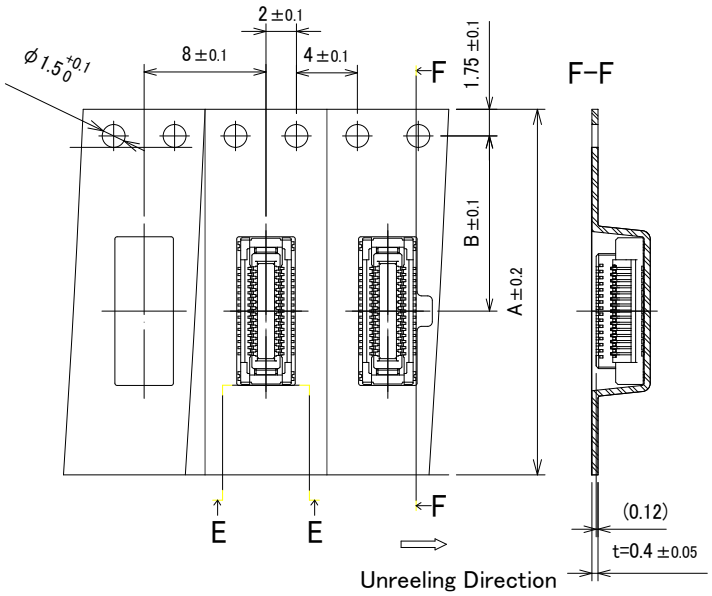

Reel Dimensions

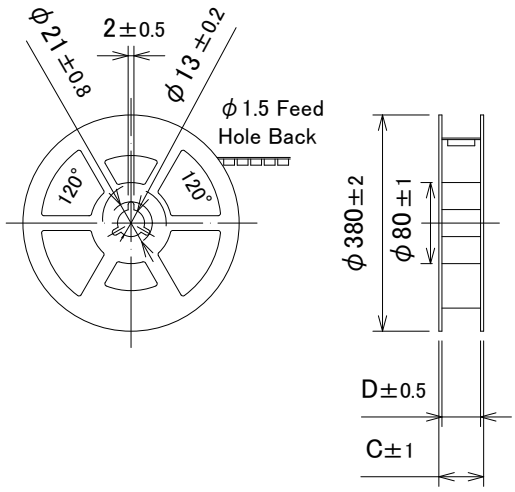

Unit : mm

Part No.	HRS No.	A	B	C	D	Purchase Unit (##) : (51)	Purchase Unit (##) : (53)
DF40F(2.0)-30DP-0.4V(##)	CL0684-4501-0-##	24	11.5	29.5	25.5	3,000pcs per reel	500pcs per reel

Aug.1.2026 Copyright 2026 HIROSE ELECTRIC CO., LTD. All Rights Reserved.

Downloaded from Arrow.com.

■ DF40T Receptacle

●Stacking Height 3.5 to 5.0mm

Embossed Carrier Tape Dimensions

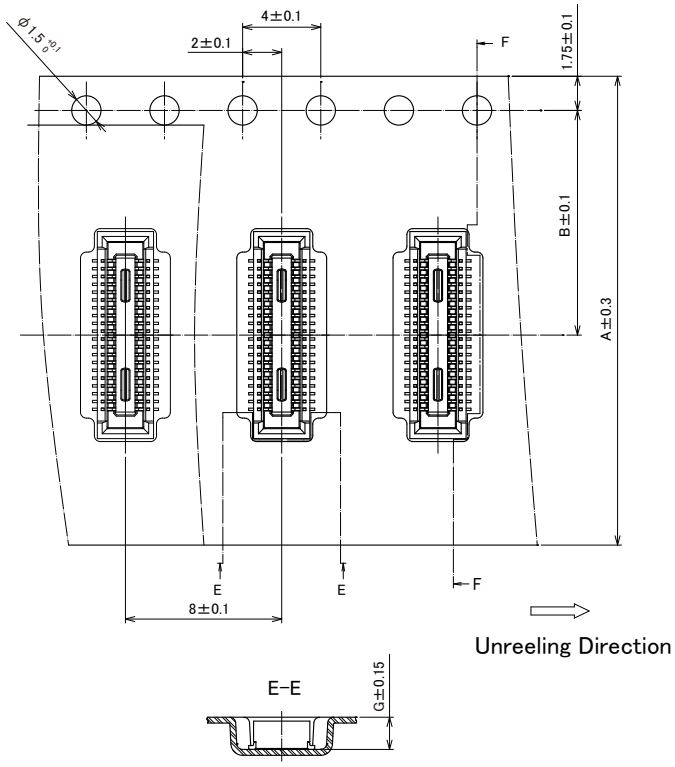

Reel Dimensions

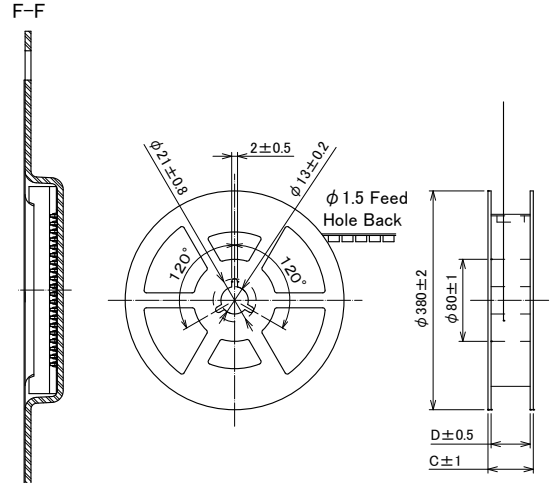

Unit : mm

Part No.	HRS No.	A	B	C	D	G	Purchase Unit (##) : (51)	Purchase Unit (##) : (53)
DF40TC-30DS-0.4V(##)	CL0684-4261-0-##	24	11.5	29.5	25.5	1.65	5,000pcs per reel	500pcs per reel
DF40TC(2.0)-30DS-0.4V(##)	CL0684-4265-0-##	24	11.5	29.5	25.5	2.2	4,000pcs per reel	500pcs per reel
DF40TC(2.5)-30DS-0.4V(##)	CL0684-4266-0-##	24	11.5	29.5	25.5	2.72	3,000pcs per reel	500pcs per reel
DF40TC(3.0)-30DS-0.4V(##)	CL0684-4242-0-##	24	11.5	29.5	25.5	3.15		

Aug.1.2026 Copyright 2026 HIROSE ELECTRIC CO., LTD. All Rights Reserved.

Downloaded from Arrow.com.

●Stacking Height 5.5 to 6.0mm

Embossed Carrier Tape Dimensions

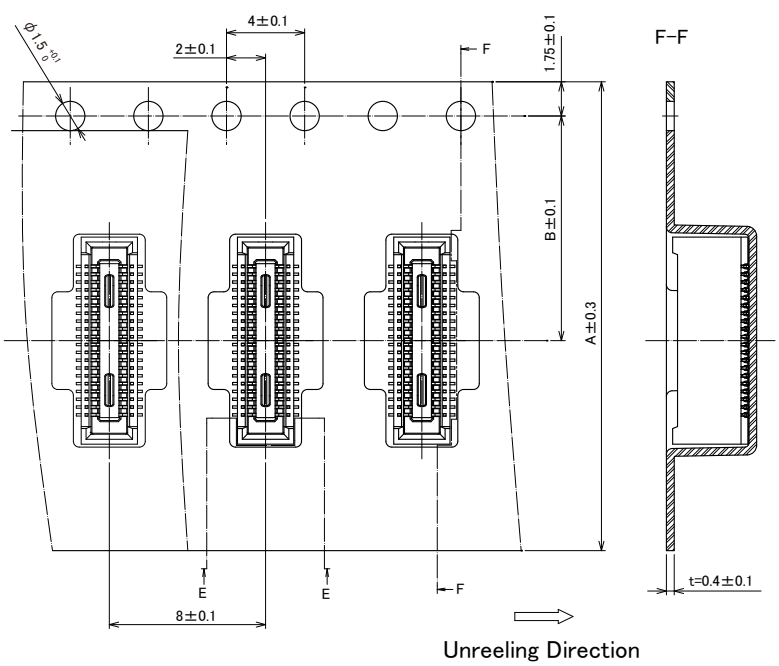

Reel Dimensions

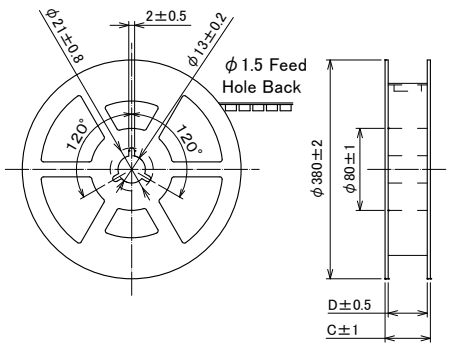

E-E

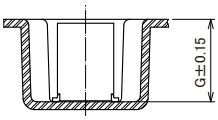

Unit : mm

Part No.	HRS No.	A	B	C	D	G	Purchase Unit (##) : (51)	Purchase Unit (##) : (53)
DF40TC(3.5)-30DS-0.4V(##)	CL0684-4237-0-##	24	11.5	29.5	25.5	3.72	2,000pcs per reel	500pcs per reel
DF40TC(4.0)-30DS-0.4V(##)	CL0684-4256-0-##	24	11.5	29.5	25.5	4.22		

Aug.1.2026 Copyright 2026 HIROSE ELECTRIC CO., LTD. All Rights Reserved.

Downloaded from Arrow.com.

Precautions

Recommended Temperature Profile	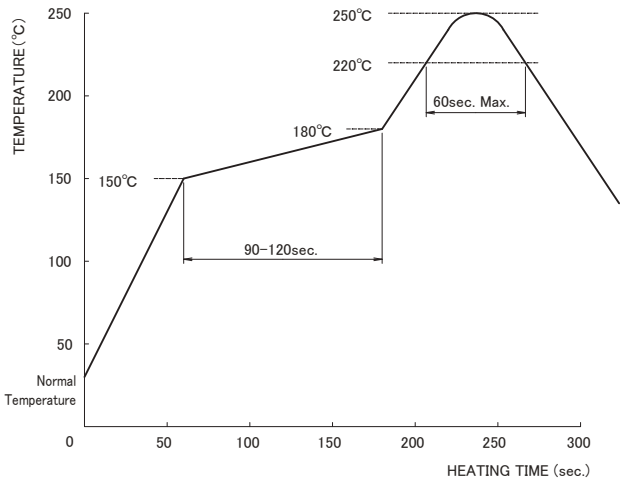 【Conditions】 1. Peak Temperature : 250°C 2. Heating : 220°C Min. for 60 sec. Max. 3. Preheating : 150 to 180°C, 90 to 120 sec. 4. Number of Reflow Cycles : 2 cycles Max. ＊Temperature refers to the surface temperature of the board near the connector lead. We recommend reflow mounting in a nitrogen environment.
Recommended Manual Soldering Conditions	Soldering iron temperature : 340 ± 10℃ , Soldering Time : Within 3 sec.
Recommended Metal Mask Thickness and Open Area to PCB Pattern (Area Ratio)	Thickness : 0.12mm, Aperture Ratio : Plug 80% / Receptacle 80%
Board Warpage	Max. of 0.02mm at the center in reference to both ends of the connector
Cleaning	Cleaning is not recommended. If you clean this product, please evaluate its performance before using it. (Cleaning may impair the mating/unmating properties and lower resistance to environmental factors.)
Precautions	· Be careful when mating/unmating the connector when it is not mounted on the PCB as it may cause damage/deformation to contacts. · Avoid supporting the PCB only with the connectors. Support it by other means such as bolts, screws, posts, etc. · Excessive prying during unmating/mating may result in damage. · In the case of hand soldering, please do not apply any flux which could cause flux wicking. · This product may have slight color differences due to production lot variability, but this does not affect the performance. · Please refer to the following page for handling precautions when inserting and removing. · Because the product can disengage if dropped (or other impact), or by FPC routing, it is advised to secure the mated connectors to the board with housings and cushioning materials. · Do not use the connector in non-recommended conditions (i.e., rated current, rated voltage, PCB design and operating environment, etc.). Such usage could lead to material outgassing, ignition, or short-circuit, etc. Refer to the specifications and guidelines for board pattern dimensions, board cautions, and connector treatment. Please contact Hirose if connector usage in conditions other than those described in the specifications and the guidelines is being considered.

Aug.1.2026 Copyright 2026 HIROSE ELECTRIC CO., LTD. All Rights Reserved.

Downloaded from Arrow.com.

Precautions for Handling During Use

●About Setting The Distance Between PCBs

Use within the specified dimensions between PCBs below.

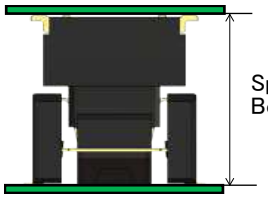

Stacking Height	Specified Dimensions Between PCBs	Plug	Receptacle
3.5mm	3.5 to 3.75mm	DF40F(2.0)-30DP-0.4V	DF40TC-30DS-0.4V
4.0mm	4.0 to 4.25mm		DF40TC(2.0)-30DS-0.4V
4.5mm	4.5 to 4.75mm		DF40TC(2.5)-30DS-0.4V
5.0mm	5.0 to 5.25mm		DF40TC(3.0)-30DS-0.4V
5.5mm	5.5 to 5.75mm		DF40TC(3.5)-30DS-0.4V
6.0mm	6.0 to 6.25mm		DF40TC(4.0)-30DS-0.4V

*Stacking Height in Under Planning

●Securing PCBs

This connector can absorb misalignment between PCBs, but not vibration.
If you support PCBs only with the connectors without taking any fixing measures, the load on the connectors will be excessive and may cause broken or contact failure.
Be sure to secure PCBs except for the connectors as shown below to prevent the board from moving. This connector connects the board to the board.
When using mounting to FPC, fasten the board and FPC to the case separately.

Fixing PCBs with a Spacer or Case

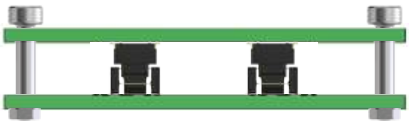

OK

Do not use the product without fixing PCBs together.

×

●Mating Precautions

1. Mating

The alignment dimension is ±0.3mm in the X and Y directions.
After the start of mating, follow the alignment and mate perpendicularly to the board without applying an overloading to the connector.

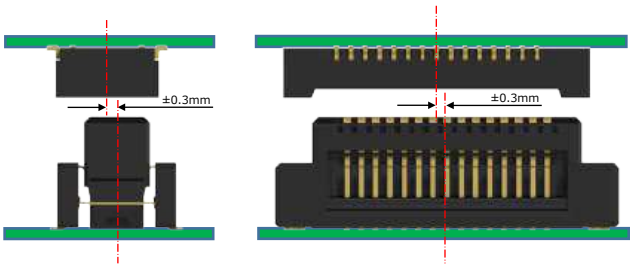

Aug.1.2026 Copyright 2026 HIROSE ELECTRIC CO., LTD. All Rights Reserved.

Downloaded from Arrow.com.

2. Misalignment Allowance in Mated Condition (Floating Range)

Because of floating design, this connector has a ±0.3mm board misalignment tolerance in the X and Y directions when mated. However, it is not suitable for absorption when the range of misalignment constantly changes due to vibration, etc. The number of repetitions of floating movable operations is stipulated to be no more than 10 times.

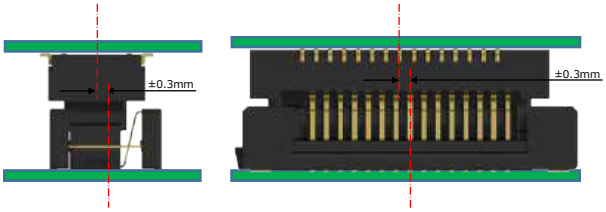

3. Removing

When removing the connector, pull it out in parallel.
If it is removed in an inclined position, connector may deform.

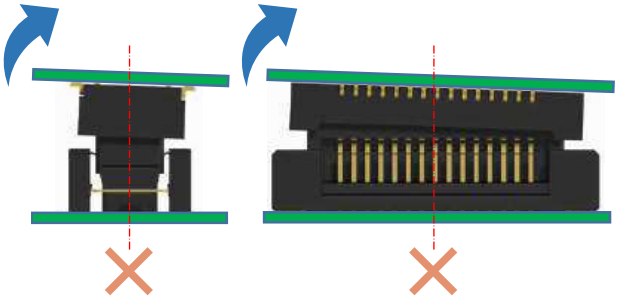

While Taking into Consideration

Specifications mentioned in this catalog are reference values.
When considering to order or use this product, please review the Drawing and Product Specifications sheets.
Use an appropriate cable when using the connector in combination with cables.
If considering usage of a non-specified cable, please contact your sales representative.
If assembly process is done by jigs & tools which are not identified by Hirose, the warranty of the product may be affected.
If considering usage for below mentioned applications, please contact your sales representative.
In cases where the application will demand a high level of reliability, such as automotive, medical instruments, public infrastructure, aerospace/defense etc. Hirose must review before assurance of reliability can be given.

Aug.1.2026 Copyright 2026 HIROSE ELECTRIC CO., LTD. All Rights Reserved.

HIROSE ELECTRIC CO.,LTD. 2-6-3,Nakagawa Chuoh,Tsuzuki-Ku,Yokohama-Shi 224-8540,JAPAN
https://www.hirose.com

※The contents of this catalog are current as of date of 12/2024. Contents are subject to change without notice for the purpose of improvements.
※The HRS logo and "HIROSE" are trademarks of HIROSE ELECTRIC CO., LTD.

Downloaded from Arrow.com.