# Data Sheet | Item Number: 734-465

THT female header; straight; Pin spacing 3.5 mm; 5-pole; 100% protected against mis-mating; 0.9 x 0.9 mm solder pin; light gray

https://www.wago.com/734-465

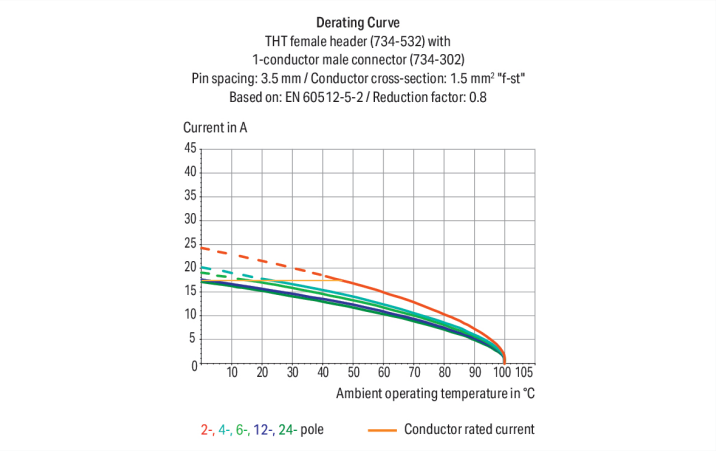


Color: light gray

Similar to illustration

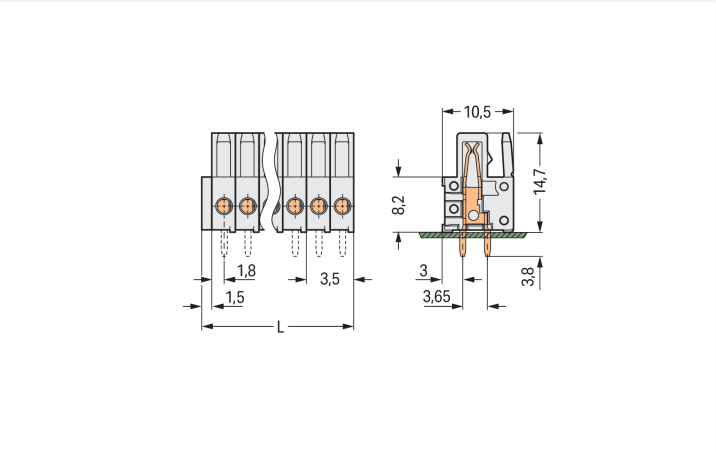


Dimensions in mm
L = (pole no. x pin spacing) + 1.5 mm

Female connector, 734 Series, light gray

This female connector (item number 734-465) simplifies electrical installations. The dimensions are (19 x 18.5 x 10.5) mm (width x height x depth).

The contact surface is coated with tin. The pcb connector is designed for THT soldering.



Downloaded from Arrow.com.

## Notes

| | |
|---|---|
| Safety Information | The *MCS – MULTI CONNECTION SYSTEM* includes connectors without breaking capacity in accordance with DIN EN 61984. When used as intended, these connectors must not be connected/disconnected when live or under load.When used as intended, these connectors must not be connected/disconnected when live or under load. The circuit design should ensure header pins, which can be touched, are not live when unmated. |
| Variants: | Other pole numbers<br>Gold-plated or partially gold-plated contact surfaces<br>Other versions (or variants) can be requested from WAGO Sales or configured at https://configurator.wago.com/. |

## Electrical data

| Ratings per | IEC/EN 60664-1 | | |
|---|---|---|---|
| Overvoltage category | III | III | II |
| Pollution degree | 3 | 2 | 2 |
| Nominal voltage | 160 V | 160 V | 320 V |
| Rated impulse withstand voltage | 2.5 kV | 2.5 kV | 2.5 kV |
| Rated current | 10 A | 10 A | 10 A |

| Approvals per | UL 1059 | | |
|---|---|---|---|
| Use group | B | C | D |
| Rated voltage | 300 V | - | 300 V |
| Rated current | 10 A | - | 10 A |

| Approvals per | CSA | | |
|---|---|---|---|
| Use group | B | C | D |
| Rated voltage | 300 V | - | 300 V |
| Rated current | 10 A | - | 10 A |

## Connection Data

| | |
|---|---|
| Clamping units | 5 |
| Total number of potentials | 5 |
| Number of connection types | 1 |
| Number of levels | 1 |

| Connection 1 | |
|---|---|
| Pole number | 5 |

## Physical data

| | |
|---|---|
| Pin spacing | 3.5 mm / 0.138 inches |
| Width | 19 mm / 0.748 inches |
| Height | 18.5 mm / 0.728 inches |
| Height from the surface | 14.7 mm / 0.579 inches |
| Depth | 10.5 mm / 0.413 inches |
| Solder pin length | 3.8 mm |
| Solder pin dimensions | 0.9 x 0.9 mm |
| Drilled hole diameter | $1.4^{(+0.1)}$ mm |

## Mechanical data

| | |
|---|---|
| Variable coding | Yes |
| Anti-rotation protection | Yes |


Downloaded from Arrow.com.

## Plug-in connection

| | |
|---|---|
| Contact type (pluggable connector) | Female connector/socket |
| Connector (connection type) | for PCB |
| Mismating protection | Yes |
| Mating direction to the PCB | 90 ° |

## PCB contact

| | |
|---|---|
| PCB contact | THT |
| Solder pin arrangement | over the entire female connector (in-line) |
| Number of solder pins per potential | 1 |

## Material data

| | |
|---|---|
| Note (material data) | Information on material specifications can be found here |
| Color | light gray |
| Material group | I |
| Insulation material (main housing) | Polyamide (PA66) |
| Flammability class per UL94 | V0 |
| Contact material | Copper alloy |
| Contact Plating | Tin |
| Fire load | 0.038 MJ |
| Weight | 2.7 g |

## Environmental requirements

| | |
|---|---|
| Limit temperature range | -60 … +100 °C |
| Processing temperature | -35 … +60 °C |

## Commercial data

| | |
|---|---|
| Product Group | 3 (Multi Conn. System) |
| PU (SPU) | 100 pcs |
| Packaging type | Box |
| Country of origin | PL |
| GTIN | 4044918999854 |
| Customs tariff number | 85366990990 |

## Product Classification

| | |
|---|---|
| UNSPSC | 39121409 |
| eCl@ss 10.0 | 27-44-04-02 |
| eCl@ss 9.0 | 27-44-04-02 |
| ETIM 9.0 | EC002637 |
| ETIM 10.0 | EC002637 |
| ECCN | NO US CLASSIFICATION |


Downloaded from Arrow.com.

## Environmental Product Compliance

| | |
|---|---|
| RoHS Compliance Status | Compliant,No Exemption |

## Approvals / Certificates

### General approvals

| Approval | Standard | Certificate Name |
|---|---|---|
| CB<br>DEKRA Certification B.V. | EN 61984 | NL-54190 |
| CSA<br>DEKRA Certification B.V. | C22.2 | 1465035 |
| KEMA/KEUR<br>DEKRA Certification B.V. | EN 61984 | 71-105522 |
| UL<br>Underwriters Laboratories Inc. | UL 1977 | E 45171 |
| UL<br>Underwriters Laboratories Inc. | UL 1059 | UL-US-L45172-6187124-1 |

### Approvals for marine applications

| Approval | Standard | Certificate Name |
|---|---|---|
| DNV<br>DNV GL SE | - | TAE000016Z |
| LR<br>Lloyds Register | IEC 61984 | 96/20035 (E5) |
| PRS<br>Polski Rejestr Statków | - | TE/1095/880590/23 |

## Downloads

### Environmental Product Compliance

#### Compliance Search

Environmental Product Compliance 734-465

## Documentation

### Additional Information

| | | | |
|---|---|---|---|
| Technical Section | 03.04.2019 | pdf<br>2027.26 KB | |

## CAD/CAE-Data

### CAD data

2D/3D Models 734-465

### CAE data

EPLAN Data Portal 734-465

ZUKEN Portal 734-465


Downloaded from Arrow.com.

| PCB Design |
| --- |
| Symbol and Footprint via SamacSys 734-465 |
| Symbol and Footprint via Ultra Librarian 734-465 |


Downloaded from Arrow.com.