PME278, Metallized Impregnated Paper, Class X1, 440 VAC

NOT FOR NEW DESIGN

Overview

Multilayer metallized paper encapsulated and impregnated in self-extinguishing material, meeting the requirements of UL 94 V–0.

Applications

For worldwide use as an electromagnetic interference suppressor in all X1 and across-the-line applications.

Benefits

- Approvals: ENEC
- Rated voltage: 440 VAC 50/60 Hz
- Capacitance range: 0.001 – 0.15 µF
- Lead Spacing: 10.2 – 25.4 mm
- Capacitance tolerance: ±20%
- Climatic category: 40/110/56, IEC 60068-1
- Tape & Reel packaging in accordance with IEC 60286-2
- RoHS compliance and lead-free terminations
- Operating temperature range of −40˚C to +110˚C
- 100% screening factory test at 2,700 VDC
- Highest possible safety regarding active and passive flammability

ATTENTION -- This series was replaced by the R47 series. Please click on the link to the R47 series datasheet HERE.

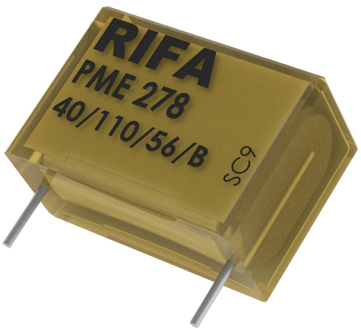

Customer Part Number

PME278	R	A	5100	M	R30
Series	Rated Voltage (VAC)	Lead Spacing (mm)	Capacitance Code (pF)	Capacitance Tolerance	Packaging
X1, Metallized Paper	R = 440	A = 10.2 B = 15.2 C = 20.3 D = 22.5 E = 25.4	The last three digits represent significant figures. The first digit specifies the total number of digits.	M = ±20%	See Ordering Options Table

KEMET Internal Part Number

P	278	H	E	102	M	440	A
Capacitor Class	Series	Lead Spacing (mm)	Size Code	Capacitance Code (pF)	Capacitance Tolerance	Rated Voltage (VAC)	Packaging
P = Paper	X1, Metallized Paper	H = 10.2 Q = 15.2 C = 20.3 S = 22.5 E = 25.4	See Dimension Table	First two digits represent significant figures. Third digit specifies number of zeros.	M = ±20%	440 = 440	See Ordering Options Table

Downloaded from Arrow.com.

Benefits cont.

NOT FOR NEW DESIGN

- Excellent self-healing properties which ensure long life even when subjected to frequent overvoltages
- Good resistance to ionization due to impregnated paper dielectric
- Impregnated paper ensures excellent stability and reliability properties, particularly in applications with continuous operation

Ordering Options Table

Lead Spacing Nominal (mm)	Type of Leads and Packaging	Lead Length (mm)	KEMET Lead and Packaging Code	Legacy Lead and Packaging Code
10.2	**Standard Lead and Packaging Options**			
	Bulk (Bag) – Short Leads	6 +0/−1	C	R06
	Bulk (Bag) – Maximum Length Leads	30 +5/−0	A	R30
	Tape & Reel (Standard Reel)	H_0= 18.5 ±0.5	L	R19T0
	Other Lead and Packaging Options			
	Tape & Reel (Large Reel)	H_0= 18.5 ±0.5	P	R19T1
Native 10.2 formed to 7.5	Ammo Pack	H_0= 16.5 ±0.5	LAF3	R30XA
15.2	**Standard Lead and Packaging Options**			
	Bulk (Bag) – Short Leads	6 +0/−1	C	R06
	Bulk (Bag) – Maximum Length Leads	30 +5/−0	A	R30
	Tape & Reel (Standard Reel)	H_0= 18.5 ±0.5	L	R19T0
	Other Lead and Packaging Options			
	Tape & Reel (Large Reel)	H_0= 18.5 ±0.5	P	R19T1
20.3	**Standard Lead and Packaging Options**			
	Bulk (Tray) – Short Leads	6 +0/−1	C	R06
	Bulk (Bag) – Maximum Length Leads	30 +5/−0	A	R30
	Tape & Reel (Standard Reel)	H_0= 18.5 ±0.5	L	R19T0
	Other Lead and Packaging Options			
	Tape & Reel (Large Reel)	H_0= 18.5 +/-0.5	P	R19T1
22.5	**Standard Lead and Packaging Options**			
	Bulk (Tray) – Short Leads	6 +0/−1	C	R06
	Bulk (Bag) – Maximum Length Leads	30 +5/−0	A	R30
	Tape & Reel (Standard Reel)	H_0= 18.5 ±0.5	L	R19T0
	Other Lead and Packaging Options			
	Tape & Reel (Large Reel)	H_0= 18.5 ±0.5	P	R19T1

Downloaded from Arrow.com.

Ordering Options Table cont.

NOT FOR NEW DESIGN

Lead Spacing Nominal (mm)	Type of Leads and Packaging	Lead Length (mm)	KEMET Lead and Packaging Code	Legacy Lead and Packaging Code
25.4	**Standard Lead and Packaging Options**			
	Bulk (Tray) – Short Leads	6 +0/−1	C	R06
	Bulk (Bag) – Maximum Length Leads	30 +5/−0	A	R30

Dimensions – Millimeters

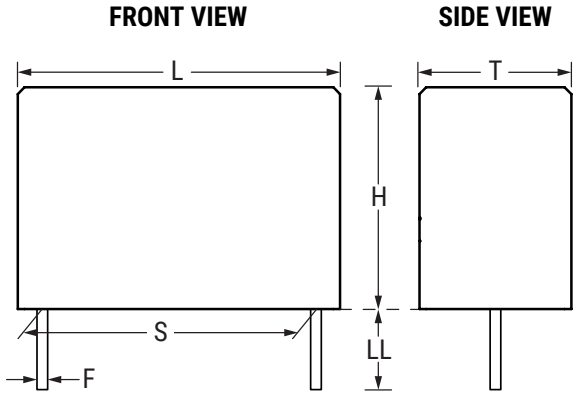

Size Code	S		T		H		L		F	
	Nominal	Tolerance	Nominal	Tolerance	Nominal	Tolerance	Nominal	Tolerance	Nominal	Tolerance
HE	10.2	±0.4	3.9	Maximum	7.5	Maximum	13.5	Maximum	0.6	±0.05
HH	10.2	±0.4	4.1	Maximum	8.2	Maximum	13.5	Maximum	0.6	±0.05
HL	10.2	±0.4	5.1	Maximum	10.5	Maximum	13.5	Maximum	0.6	±0.05
QE	15.2	±0.4	5.2	Maximum	10.5	Maximum	18.5	Maximum	0.8	±0.05
QJ	15.2	±0.4	5.5	Maximum	11.1	Maximum	18.5	Maximum	0.8	±0.05
QS	15.2	±0.4	8.5	Maximum	14.3	Maximum	18.5	Maximum	0.8	±0.05
CE	20.3	±0.4	7.6	Maximum	14.0	Maximum	24.0	Maximum	0.8	±0.05
CJ	20.3	±0.4	9.0	Maximum	15.0	Maximum	24.0	Maximum	0.8	±0.05
CP	20.3	±0.4	11.3	Maximum	16.5	Maximum	24.0	Maximum	0.8	±0.05
SJ	22.5	±0.4	8.0	Maximum	17.0	Maximum	27.0	Maximum	0.8	±0.05
SP	22.5	±0.4	10.0	Maximum	19.0	Maximum	27.0	Maximum	0.8	±0.05
SU	22.5	±0.4	12.0	Maximum	22.0	Maximum	27.0	Maximum	0.8	±0.05
EJ	25.4	±0.4	12.1	Maximum	19.0	Maximum	30.5	Maximum	1.0	±0.05
EL	25.4	±0.4	15.3	Maximum	22.0	Maximum	30.5	Maximum	1.0	±0.05
Note: See the Ordering Options Table for lead length (LL) options.										

Downloaded from Arrow.com.

Performance Characteristics

NOT FOR NEW DESIGN

Rated Voltage	440 VAC 50/60 Hz	
Capacitance Range	0.001 – 0.15 µF	
Capacitance Tolerance	±20%	
Operating Temperature Range	-40°C to +110°C	
Rated Temperature	+110°C	
Climatic Category	40/110/56/B	
Approvals	ENEC	
Dissipation Factor	Maximum Values at +23°C	
	1 kHz	1.3%
Test Voltage Between Terminals	The 100% screening factory test is carried out at 2,700 VDC. The voltage level is selected to meet the requirements in applicable equipment standards. All electrical characteristics are checked after the test. It is not permitted to repeat this test as there is a risk to damage the capacitor. KEMET is not liable in such case for any failures.	
Insulation Resistance	Minimum Value Between Terminals	
	≥ 12,000 MΩ	
In DC Applications	Recommended voltage ≤ 1,000 VDC	

Environmental Test Data

Test	IEC Publication	Procedure
Vibration	IEC 60068–2–6 Test Fc	3 directions at 2 hours each 10 – 55 Hz at 0.75 mm or 98 m/s^2
Bump	IEC 60068–2–29 Test Eb	4,000 bumps at 390 m/s^2
Change of Temperature	IEC 60068–2–14 Test Na	Upper and lower rated temperature 5 cycles
Active Flammability	IEC 60384–14	V_R + 20 surge pulses at 2.5 kV (pulse every 5 seconds)
Passive Flammability	IEC 60384–14	IEC 60384–1, IEC 60695–11–5 Needle-flame test
Damp heat steady state	IEC 60068-2-78 Test Cab	+40°C and 93% R.H., 56 days
Biased Humidity	IEC 60384-14:2023 Edition 5	+40°C and 93% R.H., Rated Voltage, 21 days

Approvals

Certification Body	Mark	Specification	File Number
IMQ S.p.A.		EN/IEC 60384–14	CA08.00249

Downloaded from Arrow.com.

Environmental Compliance

NOT FOR NEW DESIGN

All KEMET EMI capacitors are RoHS compliant.

RoHS

Table 1 – Ratings & Part Number Reference

Capacitance Value (µF)	Maximum Dimensions in mm			Lead Spacing (S)	f_o (MHz)	dV/dt (V/µs)	KEMET Part Number	Customer Part Number
	T	H	L					
0.001	3.9	7.5	13.5	10.2	53	2000	P278HE102M440(1)	PME278RA4100M(1)
0.0015	3.9	7.5	13.5	10.2	44	2000	P278HE152M440(1)	PME278RA4150M(1)
0.0022	3.9	7.5	13.5	10.2	37	2000	P278HE222M440(1)	PME278RA4220M(1)
0.0033	4.1	8.2	13.5	10.2	30	2000	P278HH332M440(1)	PME278RA4330M(1)
0.0047	5.1	10.5	13.5	10.2	24	2000	P278HL472M440(1)	PME278RA4470M(1)
0.0068	5.2	10.5	18.5	15.2	18.5	1400	P278QE682M440(1)	PME278RB4680M(1)
0.010	5.2	10.5	18.5	15.2	15.5	1400	P278QE103M440(1)	PME278RB5100M(1)
0.015	5.5	11.1	18.5	15.2	13	1400	P278QJ153M440(1)	PME278RB5150M(1)
0.022	8.5	14.3	18.5	15.2	9.6	1400	P278QS223M440(1)	PME278RB5220M(1)
0.033	7.6	14	24	20.3	9.6	1000	P278CE333M440(1)	PME278RC5330M(1)
0.047	9	15	24	20.3	7.5	1000	P278CJ473M440(1)	PME278RC5470M(1)
0.068	11.3	16.5	24	20.3	6.2	1000	P278CP683M440(1)	PME278RC5680M(1)
0.033	8	17	27	22.5	7.2	1000	P278SJ333M440(1)	PME278RD5330M(1)
0.047	8	17	27	22.5	6	1000	P278SJ473M440(1)	PME278RD5470M(1)
0.068	10	19	27	22.5	4.8	1000	P278SP683M440(1)	PME278RD5680M(1)
0.1	12	22	27	22.5	3.6	600	P278SU104M440(1)	PME278RD6100M(1)
0.1	12.1	19	30.5	25.4	3.9	600	P278EJ104M440(1)	PME278RE6100M(1)
0.15	15.3	22	30.5	25.4	3.2	600	P278EL154M440(1)	PME278RE6150M(1)
Capacitance Value (µF)	**T (mm)**	**H (mm)**	**L (mm)**	**Lead Spacing (S)**	**f_o (MHz)**	**dV/dt (V/µs)**	**KEMET Part Number**	**Customer Part Number**

(1) Insert lead and packaging code. See Ordering Options Table for available options.

Downloaded from Arrow.com.

Soldering Process

NOT FOR NEW DESIGN

The implementation of the RoHS directive has resulted in the selection of SnAuCu (SAC) alloys or SnCu alloys as primary solder. This has increased the liquidus temperature from that of 183ºC for SnPb eutectic alloy to 217 – 221ºC for the new alloys. As a result, the heat stress to the components, even in wave soldering, has increased considerably due to higher pre-heat and wave temperatures. Polypropylene capacitors are especially sensitive to heat (the melting point of polypropylene is 160 – 170ºC). Wave soldering can be destructive, especially for mechanically small polypropylene capacitors (with lead spacing of 5 – 15 mm), and great care must be taken during soldering. The recommended solder profiles from KEMET should be used. Consult KEMET with any questions. In general, the wave soldering curve from IEC Publication 61760-1 Edition 2 serves as a solid guideline for successful soldering. See Figure 1.

Reflow soldering is not recommended for through-hole film capacitors. Exposing capacitors to a soldering profile in excess of the recommended limits may result in degradation of or permanent damage to the capacitors.

Do not place the polypropylene capacitor through an adhesive curing oven to cure resin for surface-mount components. Insert through-hole parts after curing the surface-mount parts. Consult KEMET to discuss the actual temperature profile in the oven, if through-hole components must pass through the adhesive curing process. A maximum of two soldering cycles is recommended. Allow time for the capacitor surface temperature to return to a normal temperature before the second soldering cycle.

Manual Soldering Recommendations

Following is the recommendation for manual soldering with a soldering iron.

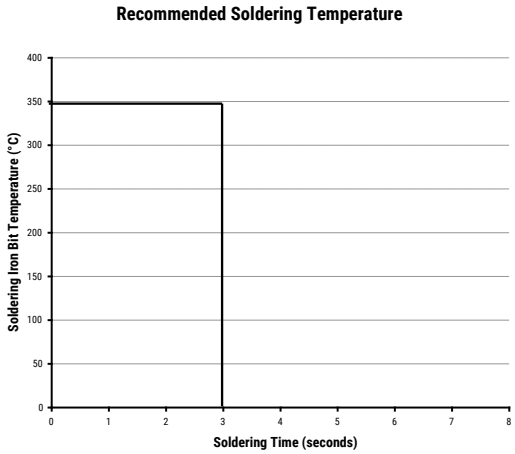

Soldering iron tip temperature should be set at 350°C (+10°C maximum), with the soldering duration not to exceed more than 3 seconds.

Wave Soldering Recommendations

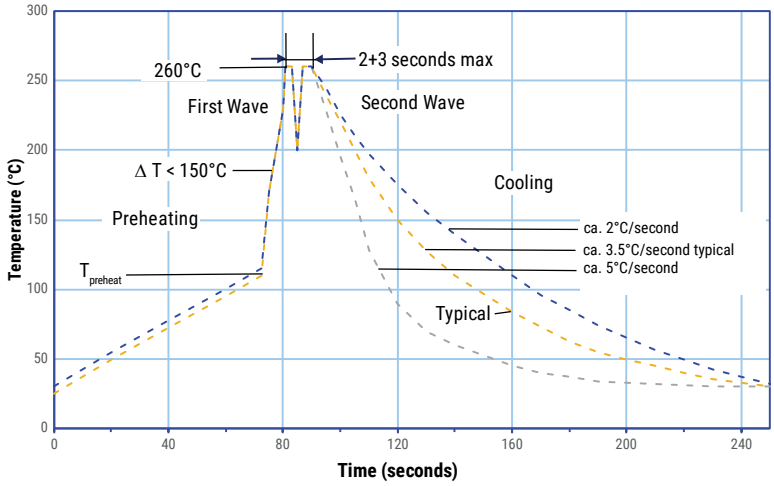

Downloaded from Arrow.com.

Soldering Process cont.

NOT FOR NEW DESIGN

Wave Soldering Recommendations cont.

1. The table indicates the maximum setup temperature for the soldering process.

Dielectric film material	Maximum Preheat Temperature		Maximum Peak Soldering Temperature	
	Capacitor Pitch ≥ 10 mm	Capacitor Pitch > 15 mm	Capacitor Pitch ≤ 15 mm	Capacitor Pitch > 15 mm
Polyester	130°C	130°C	270°C	270°C
Polypropylene	110°C	130°C	260°C	270°C
Paper	130°C	140°C	270°C	270°C
Polyphenylene Sulphide	150°C	160°C	270°C	270°C

2. The maximum temperature measured inside the capacitor: set the temperature so that inside the element the maximum temperature is below the limit.

Dielectric Film Material	Maximum Temperature Measured Inside the Element
Polyester	160°C
Polypropylene	110°C
Paper	160°C
Polyphenylene Sulphide	160°C

Temperature monitored inside the capacitor.

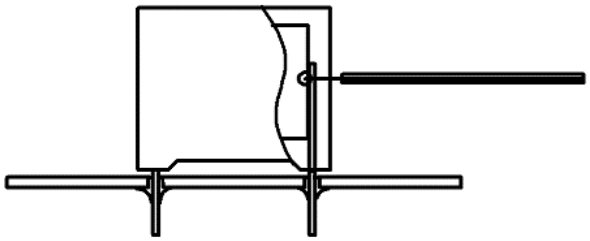

Selective Soldering Recommendations

Selective dip soldering is a variation of reflow soldering. In this method, the printed circuit board with through-hole components to be soldered is preheated and transported over the solder bath, as in normal flow soldering, without touching the solder. When the board is over the bath, it is stopped. Pre-designed solder pots are lifted from the bath with molten solder, only at the places of the selected components, and pressed against the lower surface of the board to solder the components.

The temperature profile for selective soldering is similar to the double wave flow soldering outlined in this document. **However, instead of two baths, there is only one with a time from 3 to 10 seconds.** In selective soldering, the risk of overheating is greater than in double wave flow soldering. Great care must be taken so that the parts do not overheat.

Downloaded from Arrow.com.

Construction

NOT FOR NEW DESIGN

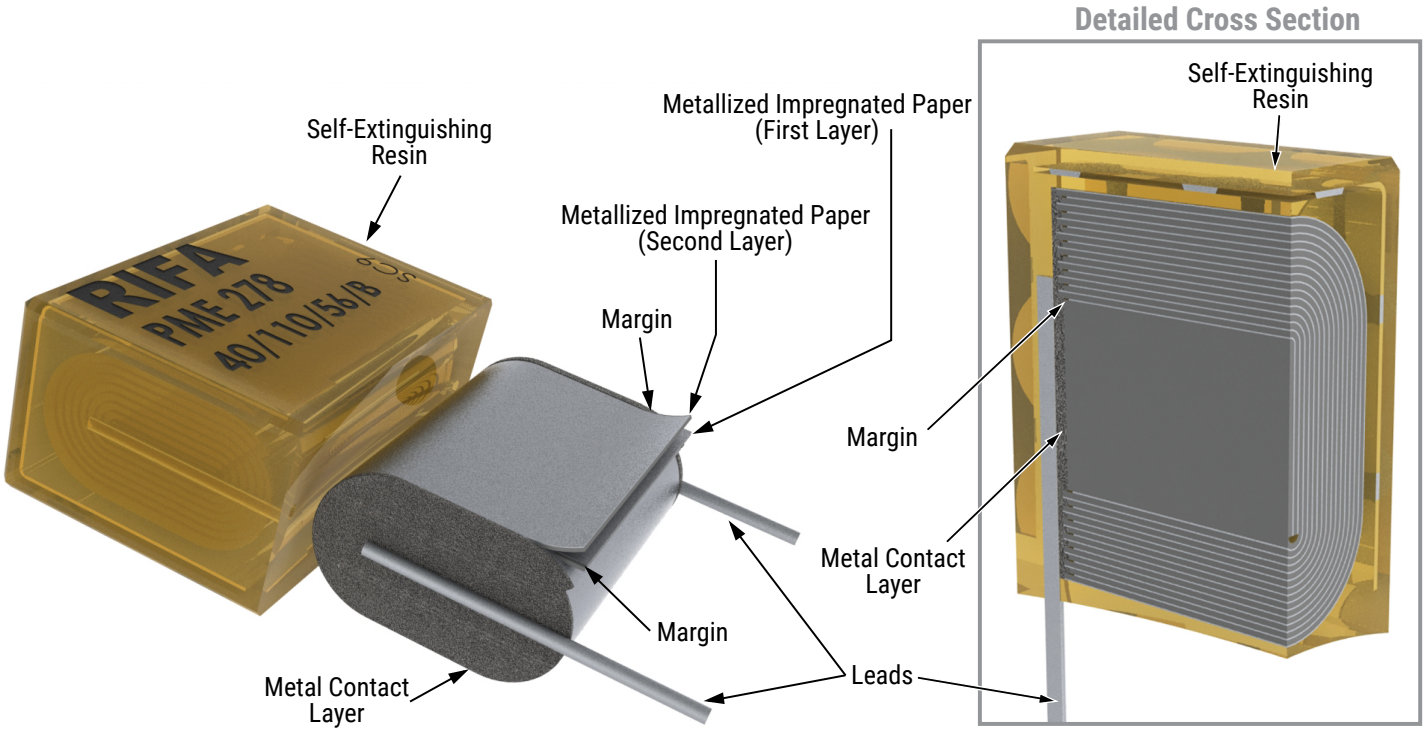

Winding Scheme

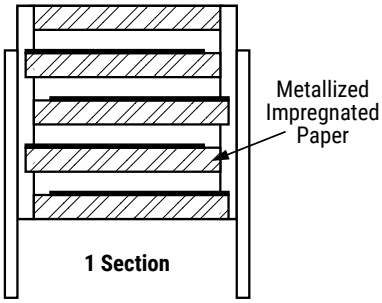

Downloaded from Arrow.com.

Marking

NOT FOR NEW DESIGN

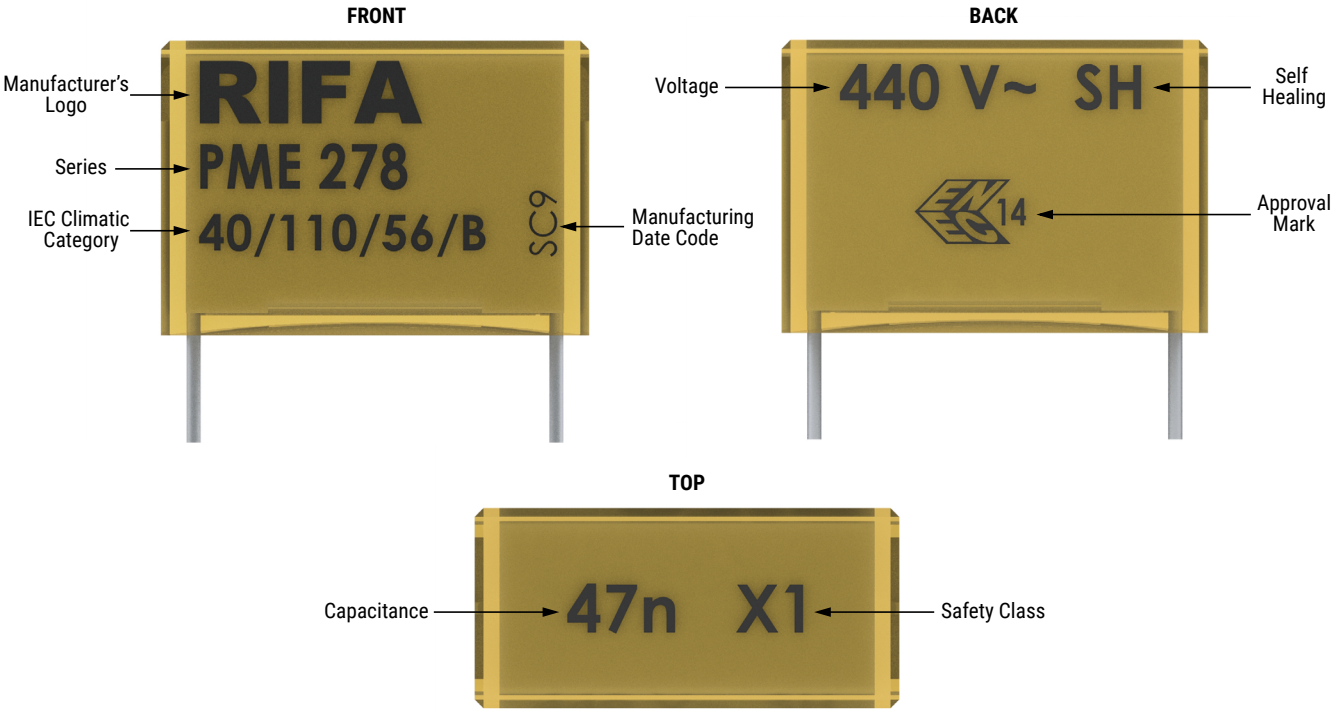

Manufacturing Date Code (IEC 60062)									
Year	Code	Year	Code	Year	Code	Month	Code	Month	Code
2020	M	2027	V	2034	E	January	1	July	7
2021	N	2028	W	2035	F	February	2	August	8
2022	P	2029	X	2036	H	March	3	September	9
2023	R	2030	A	2037	J	April	4	October	O
2024	S	2031	B	2038	K	May	5	November	N
2025	T	2032	C	2039	L	June	6	December	D
2026	U	2033	D	2040	M				

Downloaded from Arrow.com.

Packaging Quantities

NOT FOR NEW DESIGN

Lead Spacing (mm)	Thickness (mm)	Height (mm)	Length (mm)	Bulk Short Leads	Bulk Long Leads	Standard Reel ø 360 mm	Large Reel ø 500 mm	Ammo Formed
10.2	3.9	7.5	13.5	2,000	1,000	700	1,400	800
	4.1	8.2	13.5	2,000	1,000	600		780
	5.1	10.5	13.5	1,600	800	600	1,200	630
15.2	5.5	12.5	18.0	1,000	500	600		
	6.5	12.5	18.0	600	400	400		
	7.5	14.5	18.0	600	400	400		
	8.5	16.0	18.0	400	250	400		
	5.2	10.5	18.5	1,000	500	600		
	5.5	11.1	18.5	1,000	500	500		
	6.0	12.5	18.5	600	400	400		
	7.3	13.0	18.5	600	400	400	800	
	7.8	13.5	18.5	600	400	400		
	8.5	14.3	18.5	500	300	350		
20.3	7.6	14.0	24.0	1,500	250	250	500	
	8.4	14.0	24.0	1,200	200	250	500	
	9.0	15.0	24.0	1,500	200	250		
	11.3	16.5	24.0	1,000	150	180	400	
22.5	8.0	17.0	27.0	1,200	200			
	10.0	19.0	27.0	1,000	150	200		
	12.0	22.0	27.0	800	100	180	350	
25.4	10.6	16.1	30.5	1,000	150			
	10.5	17.3	30.5	1,000	100			
	12.1	19.0	30.5	800	100			
	15.3	22.0	30.5	600	75			

Downloaded from Arrow.com.

Lead Taping & Packaging (IEC 60286–2)

NOT FOR NEW DESIGN

Lead Spacing 10.2 – 15.2 mm

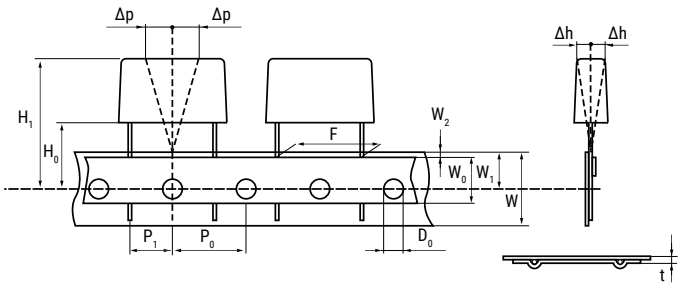

Lead Spacing 20.3 – 22.5 mm

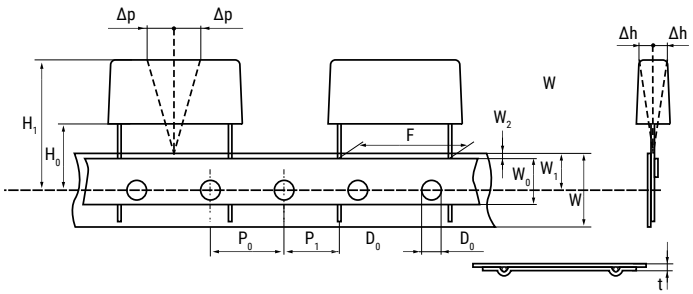

Formed Leads from 10.2 – 7.5 mm

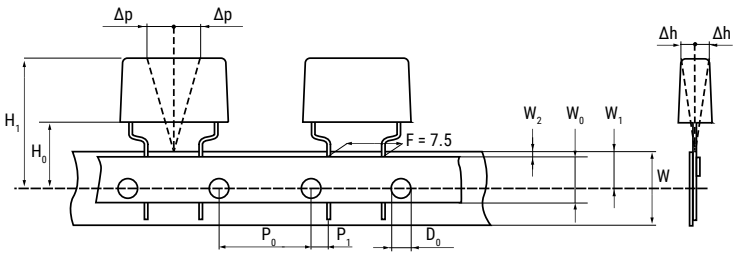

Taping Specification

Dimensions in mm								Standard IEC 60286–2
Lead Spacing	+0.6/−0.1	F	Formed 7.5	10.2	15.2	20.3	22.5	F
Carrier Tape Width	±0.5	W	18.0	18.0	18.0	18.0	18.0	18 +1/−0.5
Hold-Down Tape Width	Minimum	W_0	5.0	5.0	5.0	5.0	5.0	
Position of Sprocket Hole	±0.5	W_1	9.0	9.0	9.0	9.0	9.0	9 +0.75/−0.5
Distance Between Tapes	Maximum	W_2	3.0	3.0	3.0	3.0	3.0	3.0
Sprocket Hole Diameter	±0.2	D_0	4.0	4.0	4.0	4.0	4.0	4.0
Feed Hole Lead Spacing	±0.3	P_0 (1)	12.7 (4)	12.7	12.7	12.7	12.7	12.7
Distance Lead – Feed Hole	±0.7	P_1	3.75	7.6	5.1	8.9	5.3	P[1]
Deviation Tape – Plane	Maximum	Δp	1.3	1.3	1.3	1.3	1.3	1.3
Lateral Deviation	Maximum	Δh	2.0	2.0	2.0	2.0	2.0	2.0
Total Thickness	±0.2	t	0.7	0.7	0.7	0.7	0.9 Maximum	0.9 Maximum
Sprocket Hole/Cap Body	Nominal	H_0 (2)	18 +2/−0	18 +2/−0	18 +2/−0	18 +2/−0	18.5 ±0.5	18 +2/−0
Sprocket Hole/Top of Cap Body	Maximum	H_1 (3)	43	43	43	58	58	58 Maximum

(1) Maximum cumulative feed hole error, 1 mm per 20 parts
(2) 16.5 mm available on request
(3) Depending on case size
(4) 15 mm available on request

Downloaded from Arrow.com.

NOT FOR NEW DESIGN

Lead Taping & Packaging (IEC 60286–2) cont.

Ammo Specifications

Series	Dimensions (mm)		
	H	W	T
R4x, R4x+R, R7x, RSB	360	340	59
F5A, F5B, F5D			
F6xx, F8xx			
PHExxx, PMExxx, PMRxxx	330	330	50

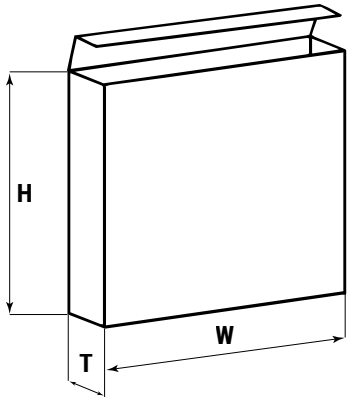

Reel Specifications

Series	Dimensions (mm)		
	D	H	W
R4x, R4x+R, R7x, RSB	355 500	30 25	55 (Max)
F5A, F5B, F5D			
F6xx, F8xx			
PHExxx, PMExxx, PMRxxx	360 500	30	46 (Max)

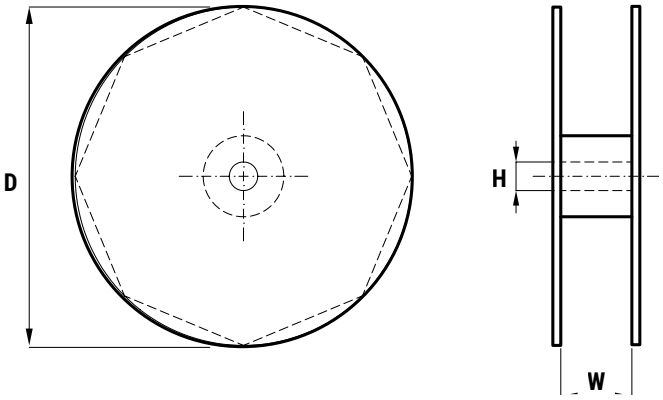

Downloaded from Arrow.com.

KEMET Electronics Corporation Sales Offices

NOT FOR NEW DESIGN

For a complete list of our global sales offices, please visit https://www.yageogroup.com/SalesResources/SalesOffices

Disclaimer

YAGEO Corporation and its affiliates do not recommend the use of commercial or automotive grade products for high reliability applications or manned space flight.

All product specifications, statements, information and data (collectively, the "Information") in this datasheet are subject to change. The customer is responsible for checking and verifying the extent to which the Information contained in this publication is applicable to an order at the time the order is placed. All Information given herein is believed to be accurate and reliable, but it is presented without guarantee, warranty, or responsibility of any kind, expressed or implied.

Statements of suitability for certain applications are based on KEMET Electronics Corporation's ("KEMET") knowledge of typical operating conditions for such applications, but are not intended to constitute – and KEMET specifically disclaims – any warranty concerning suitability for a specific customer application or use. The Information is intended for use only by customers who have the requisite experience and capability to determine the correct products for their application. Any technical advice inferred from this Information or otherwise provided by KEMET with reference to the use of KEMET's products is given gratis, and KEMET assumes no obligation or liability for the advice given or results obtained.

Although KEMET designs and manufactures its products to the most stringent quality and safety standards, given the current state of the art, isolated component failures may still occur. Accordingly, customer applications which require a high degree of reliability or safety should employ suitable designs or other safeguards (such as installation of protective circuitry or redundancies) in order to ensure that the failure of an electrical component does not result in a risk of personal injury or property damage.

Although all product–related warnings, cautions and notes must be observed, the customer should not assume that all safety measures are indicated or that other measures may not be required.

Additional information about production site flexibility can be found <here>

KEMET is a registered trademark of KEMET Electronics Corporation.

Downloaded from Arrow.com.