Panasonic INDUSTRY

UPDATE

SP-Cap

# Conductive Polymer Aluminum Electrolytic Capacitors

## Surface Mount Type

## JX series [High temperature long life product]

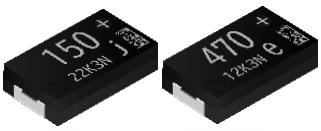

No Automotive

**Use of the general series is not recommended for these applications.**
**For automotive applications such as ADAS or IVI, please consider the AX series.**
**[Important Notes]**
**・Products in the JX Series must not be used for automotive applications. For automotive use, please select the AX Series.**

## Features

- Endurance 125 °C 3000 h
- Damp heat 85°C 85% 1000 h
- Low ESR (3 to 15 mΩ)
- RoHS compliance, Halogen free

## Specifications

| | | | | |
|---|---|---|---|---|
| Series | JX | | | |
| Category temp. range | –55 °C to +125 °C | | | |
| Rated voltage range | 2.0 V to 6.3 V | | | |
| Category voltage range | 1.6 V, 2.0 V, 3.2 V, 5.0 V | | | |
| Rated cap. range | 120 µF to 470 µF | | | |
| Capacitance tolerance | ±20 % (120 Hz / +20 °C) | | | |
| DC leakage current | I ≤ 0.1 CV (µA) 2 minutes | | | |
| Dissipation factor (tan δ) | ≤ 0.1 (120 Hz / + 20 °C) | | | |
| Surge voltage (V) | Rated voltage × 1.25 (15 °C to 35 °C) | | | |
| Endurance | +125 °C 3000 h, category voltage applied | | | |
| | Capacitance change | Within ±20 % of the initial value | | |
| | Dissipation factor (tan δ) | ≤ 2 times of the initial limit | | |
| | DC leakage current | ≤ 3 times of the initial limit | | |
| Damp heat (Steady state) | +85 °C, 85 % RH, 1000 h, No-applied voltage | | | |
| | Capacitance change of initial measurd value | 2.0 V, 2.5 V | 4.0 V | 6.3 V |
| | | +70 %, –20 % | +60 %, –20 % | +50 %, –20 % |
| | Dissipation factor (tan δ) | ≤ 2 times of the initial limit | | |
| | DC leakage current | ≤ 5 times of the initial limit | | |

## Marking

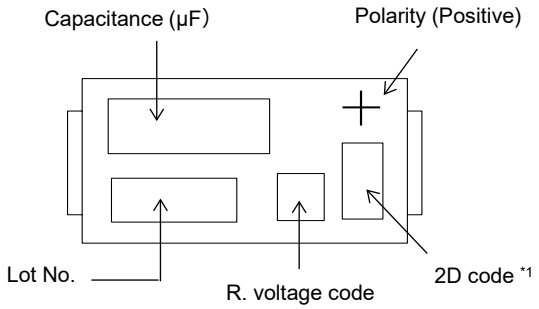


Rated voltage code

| | | | |
|---|---|---|---|
| d | 2.0 | g | 4.0 |
| e | 2.5 | j | 6.3 |

Unit : V

*1: Internal management information

## Dimensions (not to scale)

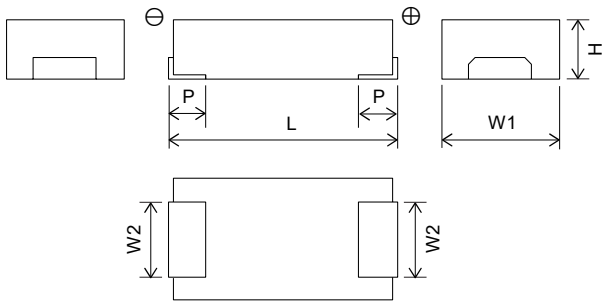


Unit : mm

| Series | L±0.2 | W1±0.2 | W2±0.1 | H±0.1 | P±0.3 |
|---|---|---|---|---|---|
| JX | 7.3 | 4.3 | 2.4 | 1.9 | 1.3 |

✻ Externals of figure are the reference.

Design and specifications are each subject to change without notice. Ask factory for the current technical specifications before purchase and/or use.
Should a safety concern arise regarding this product, please be sure to contact us immediately.
If delivery specifications suitable for the intended use was not exchanged at the time of product purchase, we will not bear any responsibility.

## Explanation of part numbers

### ◇ Part number system

e.g.: EEFJX0D331RE

**EEF**

| Series | Product classifi-cation |
|---|---|
| JX | EEF |

**JX**

| Series | Code |
|---|---|
| JX | JX |

**0D**

| Rated Voltage (V) | Code |
|---|---|
| 2.0 | 0D |
| 2.5 | 0E |
| 4.0 | 0G |
| 6.3 | 0J |

**331**

| Capacitance (μF) | Code | Capacitance (μF) | Code |
|---|---|---|---|
| 120 | 121 | 330 | 331 |
| 150 | 151 | 390 | 391 |
| 180 | 181 | 470 | 471 |
| 220 | 221 | | |

**RE**

| ESR (mΩ) | Special code |
|---|---|
| 3 | RB |
| 4.5 | RC |
| 9 | RE |
| 15 | RF |

## Characteristics list

| Series | Rated voltage [105 °C] (V) | Category voltage [125 °C] (V) | Capacitance (μF) | Case size (mm) | | | Specification | | Part number | Min. Packaging Q'ty (pcs) |
|---|---|---|---|---|---|---|---|---|---|---|
| | | | | L | W | H | Ripple current*1 (mA rms) | ESR*2 (mΩ max.) | | |
| JX | 2.0 | 1.6 | 330 | 7.3 | 4.3 | 1.9 | 6300 | 9 | EEFJX0D331RE | 3500 |
| | | | 470 | 7.3 | 4.3 | 1.9 | 6300 | 9 | EEFJX0D471RE | 3500 |
| | | | | 7.3 | 4.3 | 1.9 | 8500 | 4.5 | EEFJX0D471RC | 3500 |
| | | | | 7.3 | 4.3 | 1.9 | 10200 | 3 | EEFJX0D471RB | 3500 |
| | 2.5 | 2.0 | 220 | 7.3 | 4.3 | 1.9 | 6300 | 9 | EEFJX0E221RE | 3500 |
| | | | 330 | 7.3 | 4.3 | 1.9 | 6300 | 9 | EEFJX0E331RE | 3500 |
| | | | 390 | 7.3 | 4.3 | 1.9 | 6300 | 9 | EEFJX0E391RE | 3500 |
| | | | | 7.3 | 4.3 | 1.9 | 8500 | 4.5 | EEFJX0E391RC | 3500 |
| | | | | 7.3 | 4.3 | 1.9 | 10200 | 3 | EEFJX0E391RB | 3500 |
| | | | 470 | 7.3 | 4.3 | 1.9 | 6300 | 9 | EEFJX0E471RE | 3500 |
| | | | | 7.3 | 4.3 | 1.9 | 8500 | 4.5 | EEFJX0E471RC | 3500 |
| | | | | 7.3 | 4.3 | 1.9 | 10200 | 3 | EEFJX0E471RB | 3500 |
| | 4.0 | 3.2 | 150 | 7.3 | 4.3 | 1.9 | 5100 | 15 | EEFJX0G151RF | 3500 |
| | | | NEW | 7.3 | 4.3 | 1.9 | 6300 | 9 | EEFJX0G151RE | 3500 |
| | | | 180 | 7.3 | 4.3 | 1.9 | 5100 | 15 | EEFJX0G181RF | 3500 |
| | | | NEW | 7.3 | 4.3 | 1.9 | 6300 | 9 | EEFJX0G181RE | 3500 |
| | | | 220 | 7.3 | 4.3 | 1.9 | 5100 | 15 | EEFJX0G221RF | 3500 |
| | | | NEW | 7.3 | 4.3 | 1.9 | 6300 | 9 | EEFJX0G221RE | 3500 |
| | 6.3 | 5.0 | 120 | 7.3 | 4.3 | 1.9 | 5100 | 15 | EEFJX0J121RF | 3500 |
| | | | 150 | 7.3 | 4.3 | 1.9 | 5100 | 15 | EEFJX0J151RF | 3500 |

*1: Ripple current (100 kHz / +45 °C)
*2: ESR (100 kHz / +20 °C)
◆ Please refer to each page in this catarog for “Reflow conditions” and “Taping specifications”.

## Temperature coefficient of ripple current

| Temperature | | T ≤ 45 °C | 45 °C < T ≤ 85 °C | 85 °C < T ≤ 125 °C |
|---|---|---|---|---|
| 2.0 V to 6.3 V | Coefficient | 1.0 | 0.7 | 0.25 |

◆ Ripple current should be controlled so that surface temperature of capacitor does not exceed the category temperature.

Design and specifications are each subject to change without notice. Ask factory for the current technical specifications before purchase and/or use.
Should a safety concern arise regarding this product, please be sure to contact us immediately.
If delivery specifications suitable for the intended use was not exchanged at the time of product purchase, we will not bear any responsibility.

# Safety and Legal Matters to Be Observed

## Product specifications and applications

■ Please be advised that this product and product specifications are subject to change without notice for improvement purposes. Therefore, please request and confirm the latest delivery specifications that explain the specifications in detail before the final design, or purchase or use of the product, regardless of the application. In addition, do not use this product in any way that deviates from the contents of the company's delivery specifications.

■ Unless otherwise specified in this catalog or the product specifications, this product is intended for use in general electronic equipment (AV products, home appliances, commercial equipment, office equipment, information and communication equipment, etc.).
When this product is used for the following special cases, the specification document suited to each application shall be signed/sealed (with Panasonic Industry and the user) in advance..These include applications requiring special quality and reliability, wherein their failures or malfunctions may directly threaten human life or cause harm to the human body (e.g.: space/aircraft equipment, transportation/traffic equipment, combustion equipment, medical equipment, disaster prevention/crime prevention equipment, safety equipment, etc.).

## Safety design and product evaluation

■ Please ensure safety through protection circuits, redundant circuits, etc., in the customer's system design so that a defect in our company's product will not endanger human life or cause other serious damage.

■ This catalog shows the quality and performance of individual parts. The durability of parts varies depending on the usage environment and conditions. Therefore, please ensure to evaluate and confirm the state of each part after it has been mounted in your product in the actual operating environment before use.
If you have any doubts about the safety of this product, then please notify us immediately, and be sure to conduct a technical review including the above protection circuits and redundant circuits at your company.

## Laws / Regulations / Intellectual property

■ The transportation of dangerous goods as designated by UN numbers, UN classifications, etc., does not apply to this product. In addition, when exporting products, product specifications, and technical information described in this catalog, please comply with the laws and regulations of the countries to which the products are exported, especially those concerning security export control.

■ Each model of this product complies with the RoHS Directive (Restriction of the use of hazardous substances in electrical and electronic equipment) (2011/65/EU and (EU) 2015/863). The date of compliance with the RoHS Directive and REACH Regulation varies depending on the product model.
Further, if you are using product models in stock and are not sure whether or not they comply with the RoHS Directive or REACH Regulation, please contact us by selecting "Sales Inquiry" from the inquiry form.

■ During the manufacturing process of this product and any of its components and materials to be used, Panasonic Industry does not intentionally use ozone-depleting substances stipulated in the Montreal Protocol and specific bromine-based flame retardants such as PBBs (Poly-Brominated Biphenyls) / PBDEs (Poly-Brominated Diphenyl Ethers). In addition, the materials used in this product are all listed as existing chemical substances based on the Act on the Regulation of Manufacture and Evaluation of Chemical Substances.

■ With regard to the disposal of this product, please confirm the disposal method in each country and region where it is incorporated into your company's product and used.

■ The technical information contained in this catalog is intended to show only typical operation and application circuit examples of this product. This catalog does not guarantee that such information does not infringe upon the intellectual property rights of Panasonic Industry or any third party, nor imply that the license of such rights has been granted.

■ Design, materials, or process related to technical owned by Panasonic Industry are subject to change without notice.

**Panasonic Industry will assume no liability whatsoever if the use of our company's products deviates from the contents of this catalog or does not comply with the precautions. Please be advised of these restrictions.**

# Matters to Be Observed When Using This Product

(Conductive Polymer Aluminum Electrolytic Capacitors / SP-Cap)

## Intended use

**SP-Cap (all series) does not meet the quality standards required for automotive-related equipment.
Therefore, we are unable to support compliance with related standards (such as AEC-Q200, PPAP, etc.).
We shall not be responsible for any issues arising from the use of these products in such applications.**

## Use environments and cleaning conditions

■ This product (capacitor) is intended for standard general-purpose use in electronic equipment, and is not designed for use in the specific environments described below. Using the product in such specific environments or service conditions, therefore, may affect the performance of the product.
Please check with us about the performance and reliability of the product first before using the product.

(1) Used in liquid, such as water, oil, chemicals, and organic solvents.
(2) Used in a place exposed to direct sunlight, an outdoor place with no shielding, or a dusty place.
(3) Used in a wet place (dew concentration on a resistor, water leakage, etc.), a place exposed to sea breeze, or a place filled with a corrosive gas, such as $Cl_2$, $H_2S$, $NH_3$, $SO_2$, or $NO_X$.
(4) Used in an environment where static electricity and electromagnetic waves are strong.
(5) The product is located close to a heating component or a flammable material, such as a vinyl cable, is placed near the product.
(6) The product is used sealed with a resin, etc.
(7) Solder flux of the soldered product is cleansed with a solvent, water, and a water-soluble cleaner.
(Be careful with water soluble solder flux.)
(8) Used in an environment where an acidic or alkali atmosphere is present.
(9) Used in an environment where excessive vibration or impact is applied to the product.
(10) Used under a low atmospheric pressure condition or depressurized condition.

■ After soldering, clean the circuit board at a temperature of 60 °C or lower for 5 minutes or less. However, ensure to thoroughly rinse and dry it (at 100 °C for 20 minutes or less). The applicable solvents are as follows.

Pine Alpha ST-100S, Clean-thru 750H/750L/710M, Aqua Cleaner 210SEP, Sunelec B-12, DK be-clear CW-5790, Techno Cleaner 219, Cold Cleaner P3-375, Terpene Cleaner EC-7R, Techno Care FRW-17/FRW-1/FRV-1, AXREL 32, IPA (isopropyl alcohol)

(1) Please contact us in advance for the use of cleaning agents other than those listed above and water except pure water.
(2) Avoid using ozone-depleting substances as cleaning agents to protect the global environment.
(3) Performing ultrasonic cleaning may cause terminal disconnection, which requires prior evaluation.

■ Do not apply strong force to this product. Doing so may adversely affect mounting by causing the deformation of electrode terminals or other defects.
In addition, the application of strong force may also lead to short circuits, disconnection, increased leakage currents, and damage to the outer packaging of the product. Do not hold the body of the product or apply force even after it is attached to the circuit board.

■ When the capacitor is used in a circuit where an impact voltage is applied or a high voltage is applied in a short period (transient phenomenon) or a high pulse voltage is applied, make sure to use the capacitor at a voltage equal to or lower than its rated voltage.

## Response to anomalies and handling conditions

If this product heats up abnormally, then smoke may be generated from the exterior resin. In this case, immediately turn off the main power of the equipment and stop using it. Also, keep your face and hands away from the product as it may become hot and cause burns.

## Reliability and product life

■ Most of the failure modes are "short circuits" or "increased leakage currents." The main causes of failures are thermal stress, electrical stress, and mechanical stress due to reflow and operating temperature environments.
Even within the range of the specified use conditions, it is possible to reduce the failure rate by mitigating the operating conditions such as the temperature and voltage. Therefore, please design equipment with a sufficient margin.

■ The estimated failure rate is 8.2 Fit or less (estimated at 105 °C when the rated voltage is applied) based on data obtained from the company's reliability test, while the estimated market failure rate is 0.13 Fit or less (estimated at c = 0 and a confidence level of 60 %).

## Circuit design and circuit board design

- Do not use this product in high-impedance voltage holding circuits, coupling circuits, time constant circuits, and those that are significantly affected by leakage currents. Also, do not connect two or more units of this product in series.

- Applying overvoltage that exceeds the rated voltage specified in the specifications or reverse voltage to this product may cause an increase in leakage currents or short circuits.
  Applied voltage refers to the voltage value applied to a circuit, including the effects of the peak values of ripple voltage and transient instantaneous voltage, and does not only indicate the steady line voltage value. Design circuits so that the peak voltage does not exceed the specified voltage.
  Use this product by regulating the operating voltage to keep it lower than or equal to the rated voltage even for impulse voltage circuits, applications involving transient phenomena where a considerably high voltage is applied in a short time, and cases where high pulse voltages are applied.

- Keep the operating temperature within the range stipulated in the specifications. Design your equipment in consideration of not only the ambient temperature where the equipment is placed and its internal temperature, but also the radiant heat from heating elements (power transistors, resistors, etc.) inside the equipment, and the temperature of this product, including self-heating due to ripple current.

- Regulate the ripple current within the rated range specified in the specifications when using the product.
  Excessive ripple current causes increased leakage currents and short circuit failures due to self-heating.
  Even if the ripple current is within the rated range, prevent the ripple voltage from applying overvoltage or reverse voltage to the product.

- The ESR rating is the value at the time of shipment from the factory. The ESR value may vary depending on the customer's usage conditions.

- Leakage currents may increase after reflow soldering, and also under no-load conditions at high temperatures, in high temperature and high humidity environments, or with sudden temperature changes, even if the operating environment is within the specified range. However, in most cases, SP-Cap reduces leakage currents due to its self-recovery action when voltage is applied.

- Insulate the circuit board surface directly under the mounting area of this product. Lay out your circuit board by defining the dimensions of lands with reference to the mounting specifications stipulated in the requirements.
  The dimensions of the actual design circuit should enable the optimum mounting depending on conditions such as the circuit board, parts, and reflow.

## Mounting and storage conditions

- Check the rating (capacitance, rated voltage), polarity, and land dimensions of this product before mounting it on the circuit board. When using mounting equipment, large pressure applied during mounting may lead to an increase in leakage currents, short circuits, disconnection, or falling off from the circuit board.

- Do not use flow and dip soldering. Reflow soldering can be used with the following methods. Please refer to the mounting specifications for the recommended conditions for using the atmospheric heat conduction method.
  Please contact us for the recommended conditions for using the VPS method.

  (1) Atmospheric heat conduction method (infrared ray/hot-air system)
  (2) VPS method (target series: CX, CT, SX, ST, GX, LX, LT, and HX)

- This product is not designed for simultaneous double sided reflow soldering of printed circuit boards.

- Soldering must be performed at a temperature of 350 °C or lower at the tip of the soldering iron and within an operation time of 10 seconds, without applying excessive force to the product.
  In addition, do not remove this product for reuse once it is mounted. Soldering outside the specified conditions can cause short circuit failures, an increase in ESR, and other defects.

- Store this product in an environment with a temperature ranging from 5 °C to 30 °C and a humidity of 70% or lower by using a moisture barrier bag. The storage period before opening the moisture barrier bag is two years after manufacture, and after opening the bag is seven days. If these conditions are exceeded, then the outer package may be damaged due to thermal stress during mounting caused by moisture absorption by the package.
  After opening the bag, use up all pieces of this product within the specified storage period.

- This product is composed of various metals and resins, requiring disposal as industrial waste.

# Reference information

## Guidelines

The matters to be observed when using this product cite the technical report issued by the Japan Electronics and Information Technology Industries Association, and EIAJ RCR-2367D issued in October 2017, "Safety application guide for fixed aluminum electrolytic capacitors for use in electronic equipment." Please refer to the above technical report for details.

## Intellectual property

Panasonic Group provides customers with safe products and services. We are also making great efforts to protect our intellectual property rights for Panasonic Group products.