MICRO SWITCH
FREEPORT ILLINOIS, U.S.A.
A DIVISION OF HONEYWELL
FED. MFG. CODE 91929

SWITCH-BASIC

CATALOG LISTING
BZ-2RW82120-A21

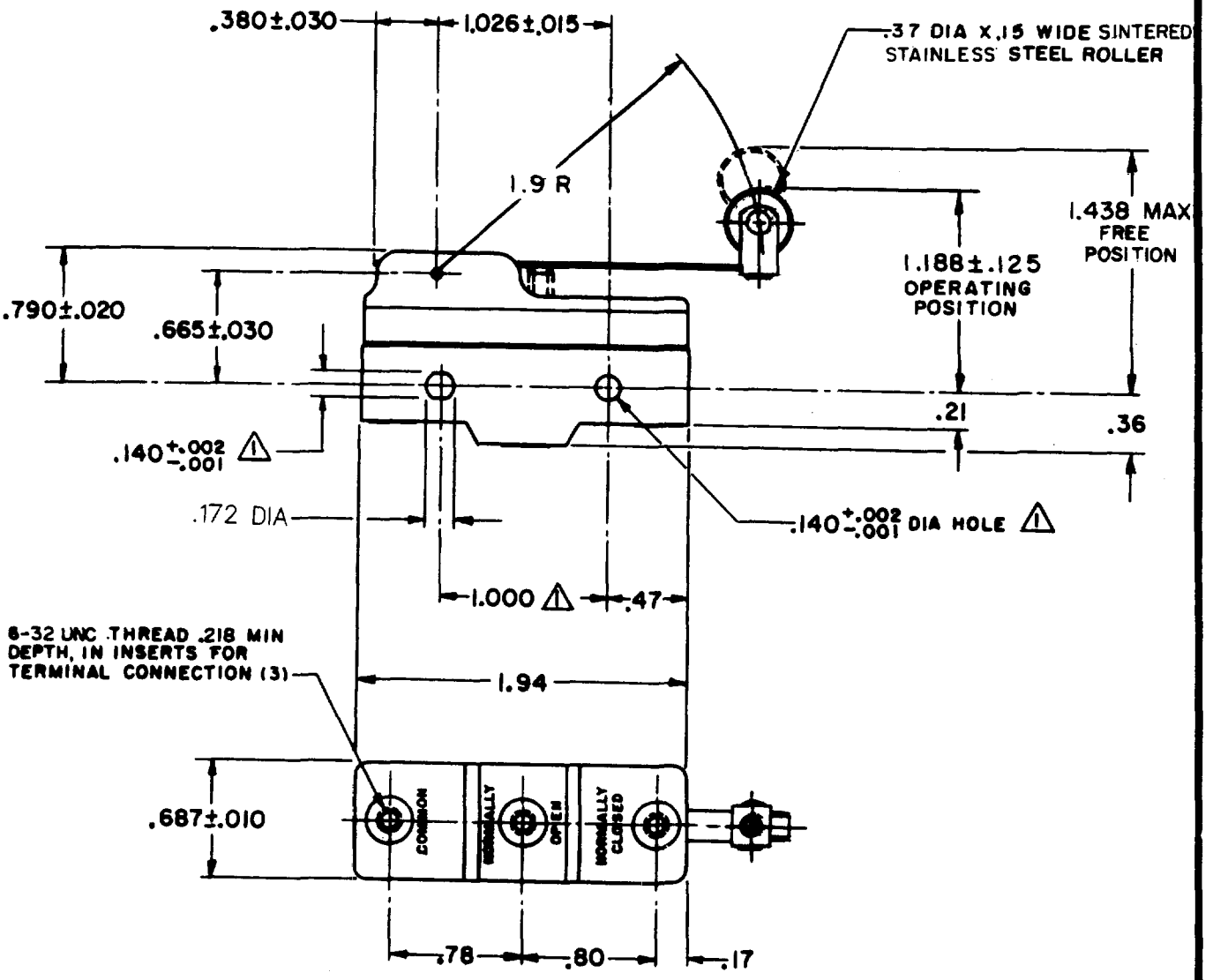

NOTES

⚠ MOUNTING HOLES WILL ACCEPT PINS OR SCREWS OF .139 MAX DIA ON 1.000±.002 CENTERS

2 - 6-32 UNC X .219 REF BINDING HEAD COMBINATION TERMINAL SCREW (3), FURNISHED UNASSEMBLED

THIS DRAWING COVERS A PROPRIETARY ITEM AND IS THE PROPERTY OF MICRO SWITCH, A DIVISION OF HONEYWELL. THIS DRAWING IS NOT TO BE COPIED OR USED WITHOUT THE APPROVAL OF MICRO SWITCH.

CHARACTERISTICS

OPERATING FORCE — — 3 1/2 OZ MAX

DIFFERENTIAL TRAVEL — — — .040 MAX

OVERTRAVEL — — — — — — — — .156 MIN

ELECTRICAL DATA

CONTACT ARRANGEMENT
S P D T

L96
15A 125, 250 OR 480 VAC
1/2A 125 VDC, 1/4A 250 VDC
1/8HP 125 VAC, 1/4HP 250 VAC

L288
L299
L306
16A 250V ∿ T85 5E4

SCALE FULL
DO NOT SCALE PRINT

UNLESS OTHERWISE NOTED
DIMENSIONS ARE IN INCHES
TOLERANCES ARE:

ONE PLACE	(.0)	±.030
TWO PLACE	(.00)	±.015
THREE PLACE	(.000)	±.005
ANGLES		±2°

WEIGHT .076 LB

X43195-BZ	REPLACES	
PR-1067	RELEASE NO.	
BZ-2RW82120-A21 PAGE 1 OF 1	DRAWING NUMBER	
6	ISSUE	
4 FEB 70	CHECK	
GCH		
4 FEB 70	CHECK	
LSD		
4 FEB 70	CHECK	
3 FEB 70	DRAWN	MBS

REVISIONS

A	CO 27539	SRH 26 MAY 70
B	CO-73287-J	JAL 22 NOV 93
C	CO-75204-B	WJC 1 FEB 94
D	CO 77589	TSM 29 MAR 94
E	C093346	DLT 17 SEP 98

FORMTEK
J-50378-1A

Downloaded from Arrow.com.