Dual Unbuffered Inverter

NL27WZU04A

The NL27WZU04A is a high performance dual unbuffered inverter operating from a 1.65 to 5.5 V supply.

Features

- Designed for 1.65 V to 5.5 V V_{CC} Operation
- Input Overvoltage Tolerant up to 5.5 V
- I_{OFF} Supports Partial Power Down Protection
- Source/Sink 12 mA at 3.0 V
- Available in SC−88 and SC−74 Packages
- Chip Complexity < 100 FETs
- −Q Suffix for Automotive and Other Applications Requiring Unique Site and Control Change Requirements; AEC−Q100 Qualified and PPAP Capable
- These Devices are Pb−Free, Halogen Free/BFR Free and are RoHS Compliant

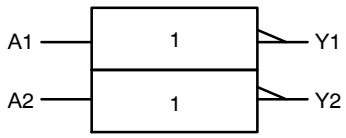

Figure 1. Logic Symbol

MARKING DIAGRAMS

SC−88
DF SUFFIX
CASE 419B

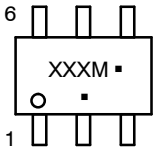

SC−74
CASE318F−05

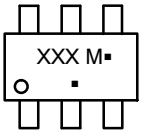

XXX = Specific Device Code
M = Date Code*
▪ = Pb−Free Package

(Note: Microdot may be in either location)

*Date Code orientation and/or position may vary depending upon manufacturing location.

ORDERING INFORMATION

See detailed ordering, marking and shipping information in the package dimensions section on page 7 of this data sheet.

© Semiconductor Components Industries, LLC, 2023

Downloaded from Arrow.com.

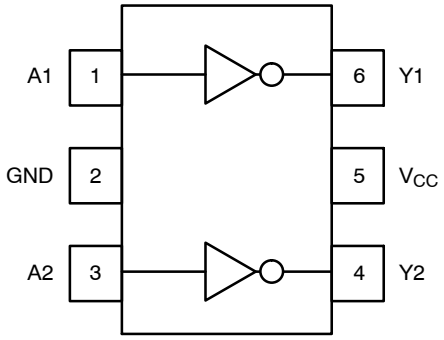

(SC−88 / SC−74)

Figure 2. Pinout (Top View)

PIN ASSIGNMENT

Pin	Function
1	A1
2	GND
3	A2
4	Y2
5	V_{CC}
6	Y1

Downloaded from Arrow.com.

MAXIMUM RATINGS

Symbol	Characteristics		Value	Unit
V_{CC}	DC Supply Voltage		−0.5 to +6.5	V
V_{IN}	DC Input Voltage		−0.5 to +6.5	V
V_{OUT}	DC Output Voltage		−0.5 to V_{CC} + 0.5	V
I_{IK}	DC Input Diode Current	V_{IN} < GND	−50	mA
I_{OK}	DC Output Diode Current		±50	mA
I_{OUT}	DC Output Source/Sink Current		±50	mA
I_{CC} or I_{GND}	DC Supply Current per Supply Pin or Ground Pin		±100	mA
T_{STG}	Storage Temperature Range		−65 to +150	°C
T_L	Lead Temperature, 1 mm from Case for 10 secs		260	°C
T_J	Junction Temperature Under Bias		+150	°C
θ_{JA}	Thermal Resistance (Note 2)	SC−88 SC−74	377 320	°C/W
P_D	Power Dissipation in Still Air	SC−88 SC−74	332 300	mW
MSL	Moisture Sensitivity		Level 1	−
F_R	Flammability Rating	Oxygen Index: 28 to 34	UL 94 V−0 @ 0.125 in	−
V_{ESD}	ESD Withstand Voltage (Note 3)	Human Body Model Charged Device Model	2000 1000	V
$I_{Latchup}$	Latchup Performance (Note 4)		±100	mA

Stresses exceeding those listed in the Maximum Ratings table may damage the device. If any of these limits are exceeded, device functionality should not be assumed, damage may occur and reliability may be affected.

1. Applicable to devices with outputs that may be tri−stated.
2. Measured with minimum pad spacing on an FR4 board, using 10mm−by−1inch, 2 ounce copper trace no air flow per JESD51−7.
3. HBM tested to ANSI/ESDA/JEDEC JS−001−2017. CDM tested to EIA/JESD22−C101−F. JEDEC recommends that ESD qualification to EIA/JESD22−A115−A (Machine Model) be discontinued per JEDEC/JEP172A.
4. Tested to EIA/JESD78 Class II.

RECOMMENDED OPERATING CONDITIONS

Symbol	Characteristics		Min	Max	Unit
V_{CC}	Positive DC Supply Voltage		1.65	5.5	V
V_{IN}	DC Input Voltage		0	5.5	V
V_{OUT}	DC Output Voltage		0	V_{CC}	
T_A	Operating Temperature Range		−55	+125	°C
t_r , t_f	Input Rise and Fall Time	V_{CC} = 1.65 V to 1.95 V V_{CC} = 2.3 V to 2.7 V V_{CC} = 3.0 V to 3.6 V V_{CC} = 4.5 V to 5.5 V	0 0 0 0	20 20 10 5	ns/V

Functional operation above the stresses listed in the Recommended Operating Ranges is not implied. Extended exposure to stresses beyond the Recommended Operating Ranges limits may affect device reliability.

Downloaded from Arrow.com.

DC ELECTRICAL CHARACTERISTICS

Symbol	Parameter	Condition	V_{CC} (V)	T_A = 25°C			−55°C ≤ T_A ≤ 125°C		Units
				Min	Typ	Max	Min	Max	
V_{IH}	High−Level Input Voltage		1.65 to 1.95	0.85 V_{CC}	–	–	0.85 V_{CC}	–	V
			2.3 to 5.5	0.80 V_{CC}	–	–	0.80 V_{CC}	–	
V_{IL}	Low−Level Input Voltage		1.65 to 1.95	–	–	0.15 V_{CC}	–	0.15 V_{CC}	V
			2.3 to 5.5	–	–	0.20 V_{CC}	–	0.20 V_{CC}	
V_{OH}	High−Level Output Voltage	V_{IN} = V_{IH} or V_{IL} I_{OH} = −100 μA	1.65 to 5.5	V_{CC} − 0.1	V_{CC}	–	V_{CC} − 0.1	–	V
		V_{IN} = GND I_{OH} = −3 mA I_{OH} = −4 mA I_{OH} = −6 mA I_{OH} = −8 mA I_{OH} = −12 mA I_{OH} = −16 mA	1.65 2.3 2.7 3.0 3.0 4.5	1.29 1.9 2.2 2.4 2.3 3.8	1.52 2.1 2.3 2.6 2.5 4.2	– – – – – –	1.29 1.9 2.2 2.4 2.3 3.8	– – – – – –	
V_{OL}	Low−Level Output Voltage	V_{IN} = V_{IH} I_{OL} = 100 μA	1.65 to 5.5	–	–	0.1	–	0.1	V
		V_{IN} = V_{CC} I_{OL} = 3 mA I_{OL} = 4 mA I_{OL} = 6 mA I_{OL} = 8 mA I_{OL} = 12 mA I_{OL} = 16 mA	1.65 2.3 2.7 3.0 3.0 4.5	– – – – – –	0.08 0.2 0.2 0.24 0.26 0.31	0.24 0.3 0.4 0.4 0.55 0.55	– – – – – –	0.24 0.3 0.4 0.4 0.55 0.55	
I_{IN}	Input Leakage Current	V_{IN} = 5.5 V or GND	1.65 to 5.5	–	–	±0.1	–	±1.0	μA
I_{OFF}	Power Off Leakage Current	V_{IN} = 5.5 V	0	–	–	1.0	–	10	μA
I_{CC}	Quiescent Supply Current	V_{IN} = V_{CC} or GND	5.5	–	–	1.0	–	10	μA

Product parametric performance is indicated in the Electrical Characteristics for the listed test conditions, unless otherwise noted. Product performance may not be indicated by the Electrical Characteristics if operated under different conditions.

Downloaded from Arrow.com.

AC ELECTRICAL CHARACTERISTICS

Symbol	Parameter	Condition	V_{CC} (V)	T_A = 25°C			−55°C ≤ T_A ≤ 125°C		Units
				Min	Typ	Max	Min	Max	
t_{PLH} t_{PHL}	Propagation Delay Input A to Y (Figure 3 and 4)	R_L = 1 MΩ, C_L = 15 pF	1.65 to 1.95	–	5.5	9.8	–	11.0	ns
		R_L = 1 MΩ, C_L = 15 pF	2.3 to 2.7	–	3.3	5.7	–	6.3	
		R_L = 1 MΩ, C_L = 15 pF	3.0 to 3.6	–	2.7	4.1	–	4.5	
		R_L = 500 Ω, C_L = 50 pF		–	4.0	6.4	–	7.0	
		R_L = 1 MΩ, C_L = 15 pF	4.5 to 5.5	–	2.2	3.3	–	3.6	
		R_L = 500 Ω, C_L = 50 pF		–	3.4	5.6	–	6.2	

CAPACITIVE CHARACTERISTICS

Symbol	Parameter	Condition	Typical	Units
C_{IN}	Input Capacitance	V_{CC} = 5.5 V, V_{IN} = 0 V or V_{CC}	2.5	pF
C_{OUT}	Output Capacitance	V_{CC} = 5.5 V, V_{IN} = 0 V or V_{CC}	4.0	pF
C_{PD}	Power Dissipation Capacitance (Note 5)	10 MHz, V_{CC} = 5.5 V, V_{IN} = 0 V or V_{CC}	4.0	pF

5. C_{PD} is defined as the value of the internal equivalent capacitance which is calculated from the operating current consumption without load. Average operating current can be obtained by the equation: $I_{CC(OPR)} = C_{PD} \bullet V_{CC} \bullet f_{in} + I_{CC}$. C_{PD} is used to determine the no−load dynamic power consumption; $P_D = C_{PD} \bullet V_{CC}^2 \bullet f_{in} + I_{CC} \bullet V_{CC}$.

Downloaded from Arrow.com.

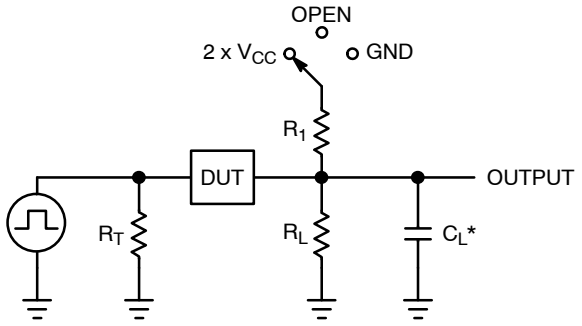

C_L includes probe and jig capacitance
R_T is Z_{OUT} of pulse generator (typically 50 Ω)
f = 1 MHz

Figure 3. Test Circuit

Test	Switch Position	C_L, pF	R_L, Ω	R_1, Ω
t_{PLH} / t_{PHL}	Open	See AC Characteristics Table		
t_{PLZ} / t_{PZL}	2 x V_{CC}	50	500	500
t_{PHZ} / t_{PZH}	GND	50	500	500

X = Don't Care

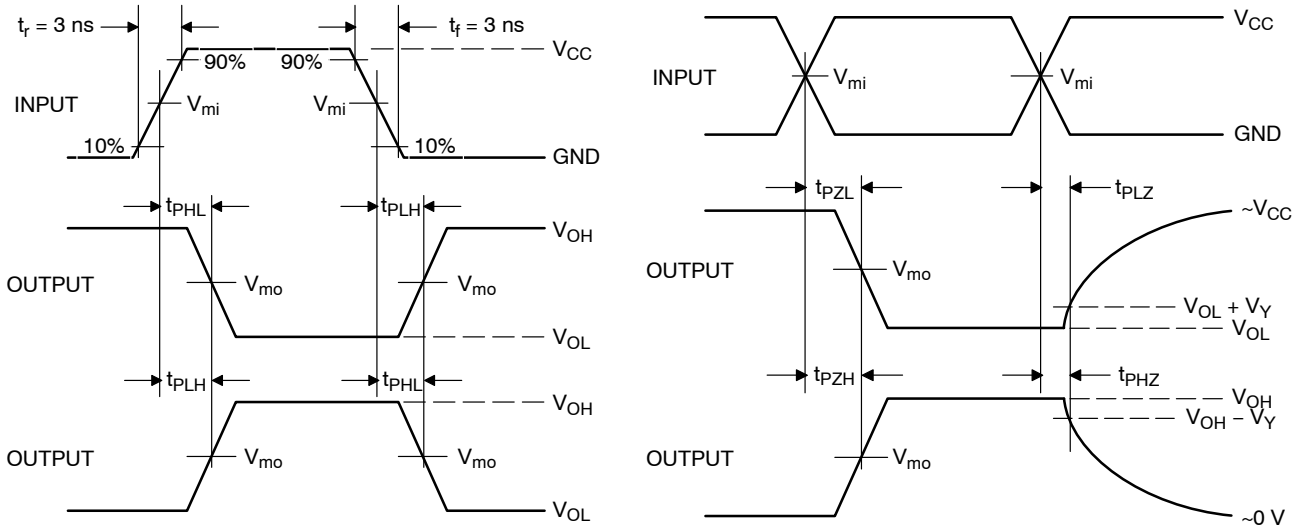

Figure 4. Switching Waveforms

V_{CC}, V	V_{mi}, V	V_{mo}, V		V_Y, V
		t_{PLH}, t_{PHL}	t_{PZL}, t_{PLZ}, t_{PZH}, t_{PHZ}	
1.65 to 1.95	$V_{CC}/2$	$V_{CC}/2$	$V_{CC}/2$	0.15
2.3 to 2.7	$V_{CC}/2$	$V_{CC}/2$	$V_{CC}/2$	0.15
3.0 to 3.6	$V_{CC}/2$	$V_{CC}/2$	$V_{CC}/2$	0.3
4.5 to 5.5	$V_{CC}/2$	$V_{CC}/2$	$V_{CC}/2$	0.3

Downloaded from Arrow.com.

DEVICE ORDERING INFORMATION

Device	Packages	Specific Device Code	Pin 1 Orientation (See below)	Shipping†
NL27WZU04ADFT2G	SC−88	M6	Q4	3000 / Tape & Reel
NL27WZU04ADFT2G−Q*	SC−88	M6	Q4	3000 / Tape & Reel
NL27WZU04ADBVT1G	SC−74	M6	Q4	3000 / Tape & Reel

†For information on tape and reel specifications, including part orientation and tape sizes, please refer to our Tape and Reel Packaging Specifications Brochure, BRD8011/D.

*−Q Suffix for Automotive and Other Applications Requiring Unique Site and Control Change Requirements; AEC−Q100 Qualified and PPAP Capable.

Pin 1 Orientation in Tape and Reel

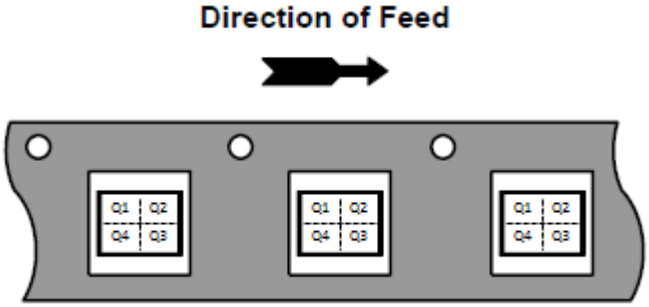

Downloaded from Arrow.com.

PACKAGE DIMENSIONS

SC−88/SC70−6/SOT−363
CASE 419B−02
ISSUE Y

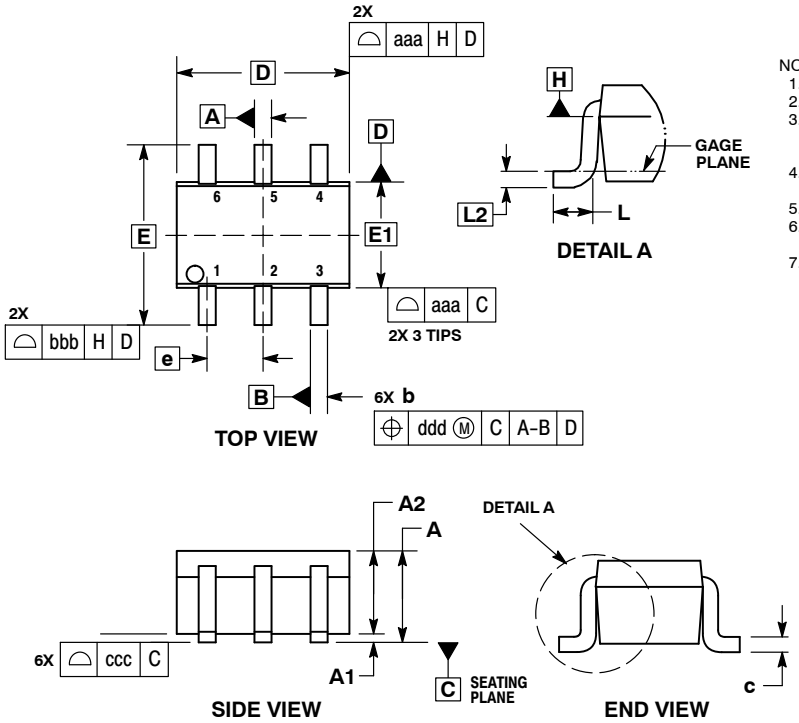

NOTES:
1. DIMENSIONING AND TOLERANCING PER ASME Y14.5M, 1994.
2. CONTROLLING DIMENSION: MILLIMETERS.
3. DIMENSIONS D AND E1 DO NOT INCLUDE MOLD FLASH, PROTRUSIONS, OR GATE BURRS. MOLD FLASH, PROTRUSIONS, OR GATE BURRS SHALL NOT EXCEED 0.20 PER END.
4. DIMENSIONS D AND E1 AT THE OUTERMOST EXTREMES OF THE PLASTIC BODY AND DATUM H.
5. DATUMS A AND B ARE DETERMINED AT DATUM H.
6. DIMENSIONS b AND c APPLY TO THE FLAT SECTION OF THE LEAD BETWEEN 0.08 AND 0.15 FROM THE TIP.
7. DIMENSION b DOES NOT INCLUDE DAMBAR PROTRUSION. ALLOWABLE DAMBAR PROTRUSION SHALL BE 0.08 TOTAL IN EXCESS OF DIMENSION b AT MAXIMUM MATERIAL CONDITION. THE DAMBAR CANNOT BE LOCATED ON THE LOWER RADIUS OF THE FOOT.

	MILLIMETERS			INCHES		
DIM	MIN	NOM	MAX	MIN	NOM	MAX
A	–––	–––	1.10	–––	–––	0.043
A1	0.00	–––	0.10	0.000	–––	0.004
A2	0.70	0.90	1.00	0.027	0.035	0.039
b	0.15	0.20	0.25	0.006	0.008	0.010
C	0.08	0.15	0.22	0.003	0.006	0.009
D	1.80	2.00	2.20	0.070	0.078	0.086
E	2.00	2.10	2.20	0.078	0.082	0.086
E1	1.15	1.25	1.35	0.045	0.049	0.053
e	0.65 BSC			0.026 BSC		
L	0.26	0.36	0.46	0.010	0.014	0.018
L2	0.15 BSC			0.006 BSC		
aaa	0.15			0.006		
bbb	0.30			0.012		
ccc	0.10			0.004		
ddd	0.10			0.004		

RECOMMENDED SOLDERING FOOTPRINT*

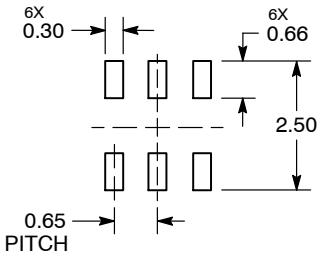

DIMENSIONS: MILLIMETERS

*For additional information on our Pb−Free strategy and soldering details, please download the **onsemi** Soldering and Mounting Techniques Reference Manual, SOLDERRM/D.

Downloaded from Arrow.com.

PACKAGE DIMENSIONS

SC−74
CASE 318F
ISSUE P

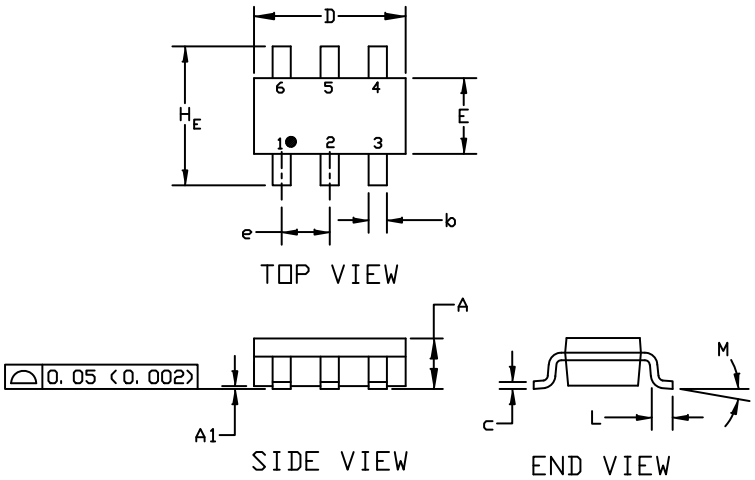

NOTES:
1. DIMENSIONING AND TOLERANCING PER ASME Y14.5M, 1994
2. CONTROLLING DIMENSION: INCHES
3. MAXIMUM LEAD THICKNESS INCLUDES LEAD FINISH THICKNESS. MINIMUM LEAD THICKNESS IS THE MINIMUM THICKNESS OF THE BASE MATERIAL.

	MILLIMETERS			INCHES		
DIM	MIN.	NOM.	MAX.	MIN.	NOM.	MAX.
A	0.90	1.00	1.10	0.035	0.039	0.043
A1	0.01	0.06	0.10	0.001	0.002	0.004
b	0.25	0.37	0.50	0.010	0.015	0.020
c	0.10	0.18	0.26	0.004	0.007	0.010
D	2.90	3.00	3.10	0.114	0.118	0.122
E	1.30	1.50	1.70	0.051	0.059	0.067
e	0.85	0.95	1.05	0.034	0.037	0.041
H_E	2.50	2.75	3.00	0.099	0.108	0.118
L	0.20	0.40	0.60	0.008	0.016	0.024
M	0°	---	10°	0°	---	10°

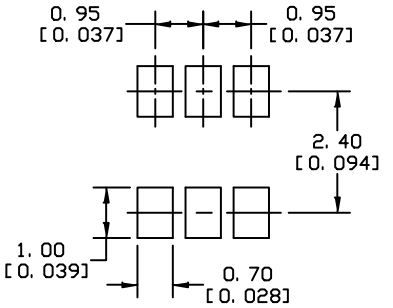

* For additional information on our Pb-Free strategy and soldering details, please download the ON Semiconductor Soldering and Mounting Techniques Reference Manual, SOLDERRM/D.

SOLDERING FOOTPRINT

Downloaded from Arrow.com.

onsemi, onsemi, and other names, marks, and brands are registered and/or common law trademarks of Semiconductor Components Industries, LLC dba "**onsemi**" or its affiliates and/or subsidiaries in the United States and/or other countries. **onsemi** owns the rights to a number of patents, trademarks, copyrights, trade secrets, and other intellectual property. A listing of **onsemi**'s product/patent coverage may be accessed at www.onsemi.com/site/pdf/Patent−Marking.pdf. **onsemi** reserves the right to make changes at any time to any products or information herein, without notice. The information herein is provided "as−is" and **onsemi** makes no warranty, representation or guarantee regarding the accuracy of the information, product features, availability, functionality, or suitability of its products for any particular purpose, nor does **onsemi** assume any liability arising out of the application or use of any product or circuit, and specifically disclaims any and all liability, including without limitation special, consequential or incidental damages. Buyer is responsible for its products and applications using **onsemi** products, including compliance with all laws, regulations and safety requirements or standards, regardless of any support or applications information provided by **onsemi**. "Typical" parameters which may be provided in **onsemi** data sheets and/or specifications can and do vary in different applications and actual performance may vary over time. All operating parameters, including "Typicals" must be validated for each customer application by customer's technical experts. **onsemi** does not convey any license under any of its intellectual property rights nor the rights of others. **onsemi** products are not designed, intended, or authorized for use as a critical component in life support systems or any FDA Class 3 medical devices or medical devices with a same or similar classification in a foreign jurisdiction or any devices intended for implantation in the human body. Should Buyer purchase or use **onsemi** products for any such unintended or unauthorized application, Buyer shall indemnify and hold **onsemi** and its officers, employees, subsidiaries, affiliates, and distributors harmless against all claims, costs, damages, and expenses, and reasonable attorney fees arising out of, directly or indirectly, any claim of personal injury or death associated with such unintended or unauthorized use, even if such claim alleges that **onsemi** was negligent regarding the design or manufacture of the part. **onsemi** is an Equal Opportunity/Affirmative Action Employer. This literature is subject to all applicable copyright laws and is not for resale in any manner.

ADDITIONAL INFORMATION

TECHNICAL PUBLICATIONS:
Technical Library: www.onsemi.com/design/resources/technical−documentation
onsemi Website: www.onsemi.com

ONLINE SUPPORT: www.onsemi.com/support
For additional information, please contact your local Sales Representative at www.onsemi.com/support/sales

◊

Downloaded from Arrow.com.