XC6503 Series

ETR03046-009d

C_L Capacitor-Less 500mA Low Power Consumption High Speed LDO Regulator

■GENERAL DESCRIPTION

The XC6503 series is a 500mA high speed CMOS LDO regulator that can provide stable output voltages even without a load capacitor C_L. The devices are available in fixed output voltage from 1.2V to 5.0V in 0.05V increments

The C_L capacitor-less is possible because phase compensation is carried out internally unlike other LDOs where it is done externally. It results in saving board design space. The current limit fold-back circuit and thermal shutdown circuit work as protection circuit. The XC6503P is a 3-Terminal regulator and the XC6503A/B/C/D has a chip enable function, which enables the entire circuit to be turned off by a low level input signal to the CE pin.

When a C_L capacitor is used, the IC can discharge the electric charge stored at the output capacitor through the internal switch while in standby state, and as a result the V_{OUT} quickly returns to the V_{SS} level.

■APPLICATIONS

- ●Smart phones / Mobile phones
- ●Portable game consoles
- ●Modules (wireless, camera, etc.)
- ●Bluetooth modules
- ●Digital TV tuner modules

■FEATURES

Maximum Output Current	:	500mA
Input Voltage Range	:	1.7V ~ 6.0V
Output Voltage Range	:	1.2V ~ 5.0V (0.05V increments)
Output Accuracy	:	±1.0% (2.0V ~ 5.0V) ±20mV (1.2V ~ 1.95V)
Temperature Stability	:	±30ppm/℃
Dropout Voltage	:	190mV@V_{OUT}=2.8V, I_{OUT} =300mA
Low Power Consumption	:	15μA, 0.01μA (in standby)
High PSRR	:	55dB@1kHz, V_{OUT}=2.8V
Protection Current	:	Current Limiter (630mA) Short-circuit Protection Thermal Shutdown
C_L Capacitor-Less	:	Internal Phase Compensation
Operating Ambient Temperature	:	-40℃ ~ 85℃
Packages	:	USP-4, SOT-25, SOT-89-5 (XC6503A-D) SOT-89 (XC6503P)
Environmentally Friendly	:	EU RoHS Compliant, Pb Free

■TYPICAL APPLICATION CIRCUIT

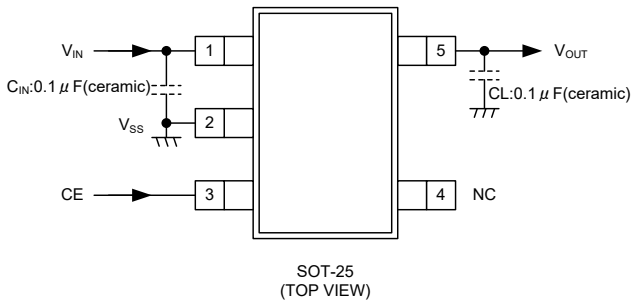

SOT-25
(TOP VIEW)

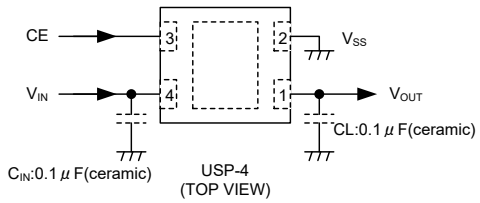

USP-4
(TOP VIEW)

■TYPICAL PERFORMANCE CHARACTERISTICS

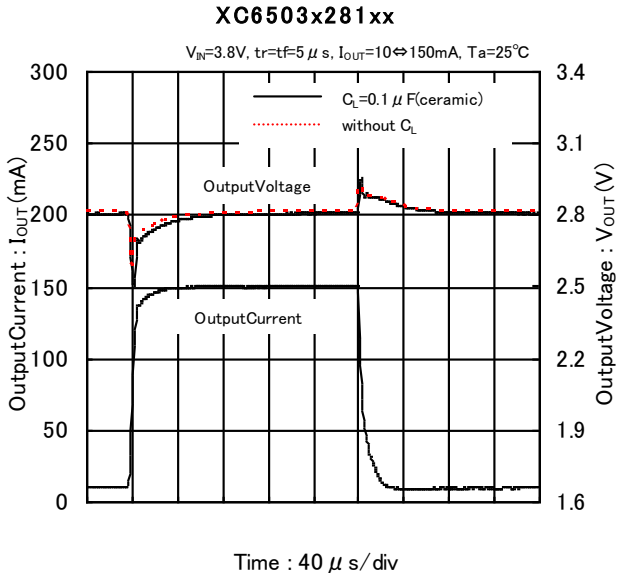

Downloaded from Arrow.com.

■BLOCK DIAGRAMS

XC6503 A Series

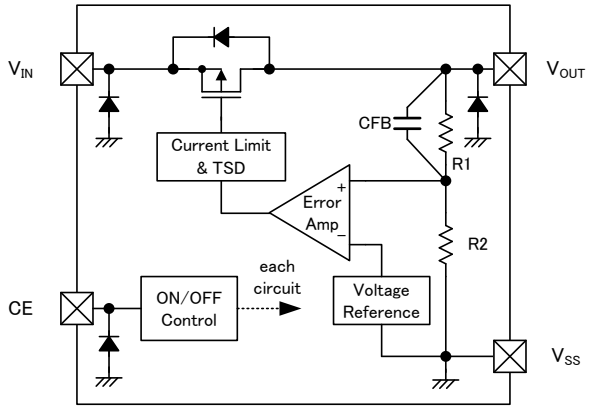

XC6503 B Series

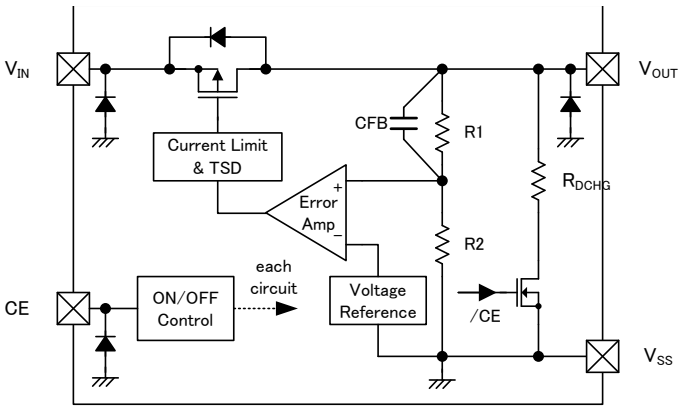

XC6503 C Series

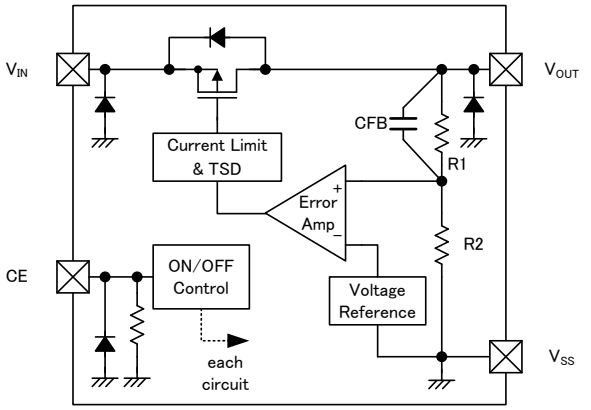

XC6503 D Series

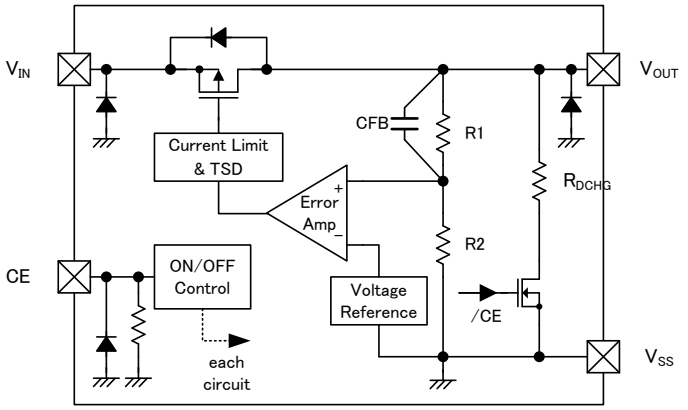

XC6503 P Series

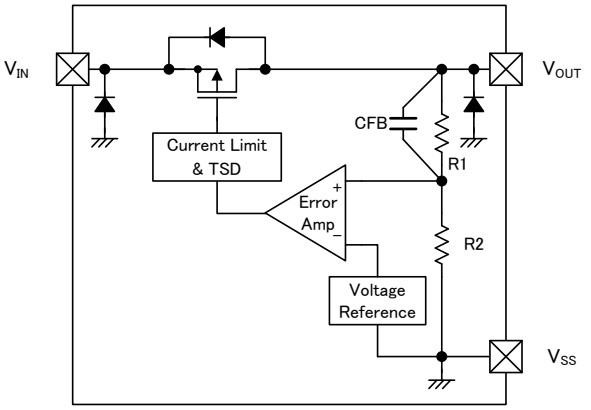

* Diodes inside the circuits are ESD protection diodes and parasitic diodes.

Downloaded from Arrow.com.

■PRODUCT CLASSIFICATION

1) Ordering Information

XC6503①②③④⑤⑥-⑦(*1) : CE function, Fixed output voltage

DESIGNATOR	ITEM	SYMBOL	DESCRIPTION
①	Type	A	Selection Guide
		B	
		C	
		D	
②③	Output Voltage	12~50	ex.) ②=2, ③=8 → 2.8V
④	Output Accuracy	1	0.1V increments ±0.02V (1.2~1.9V), ±1% (2.0~5.0V) ex.) 1.80V → ②=1, ③=8, ④=1
		A	0.05V increments ±0.02V(1.25~1.95V), ±1%(2.05~4.95V) ex.) 1.85V → ②=1, ③=8, ④=A
⑤⑥-⑦	Packages (Order Unit)	GR-G	USP-4 (3,000pcs/Reel)
		MR-G	SOT-25 (3,000pcs/Reel)
		PR-G	SOT-89-5 (1,000pcs/Reel)

(*1) The "-G" suffix denotes Halogen and Antimony free as well as being fully EU RoHS compliant.

XC6503①②③④⑤⑥-⑦(*1) : 3 pin regulator (No CE function)

DESIGNATOR	ITEM	SYMBOL	DESCRIPTION
①	Type	P	Selection Guide
②③	Output Voltage	12~50	ex.) ②=2, ③=8 → 2.8V
④	Output Accuracy	1	0.1V increments ±0.02V (1.2~1.9V), ±1% (2.0~5.0V) ex.) 1.80V → ②=1, ③=8, ④=1
		A	0.05V increments ±0.02V(1.25~1.95V), ±1%(2.05~4.95V) ex.) 1.85V → ②=1, ③=8, ④=A
⑤⑥-⑦	Packages (Order Unit)	PR-G	SOT-89 (1,000pcs/Reel)

(*1) The "-G" suffix denotes Halogen and Antimony free as well as being fully EU RoHS compliant.

2) Selection Guide

TYPE	CURRENT LIMITTER	SHORT PROTECTION	THERMAL SHUTDOWN PROTECTION	CE Pull-down RESISTOR	C_L DISCHARGE	CE PIN
A	Yes	Yes	Yes	No	No	Yes
B	Yes	Yes	Yes	No	Yes	Yes
C	Yes	Yes	Yes	Yes	No	Yes
D	Yes	Yes	Yes	Yes	Yes	Yes
P	Yes	Yes	Yes	No	No	No

Downloaded from Arrow.com.

■PIN CONFIGURATION

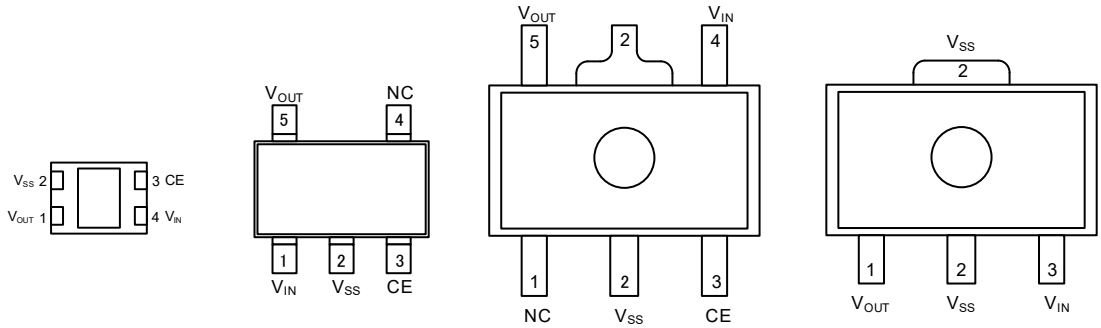

USP-4 (BOTTOM VIEW) SOT-25 (TOP VIEW) SOT-89-5 (TOP VIEW) SOT-89 (TOP VIEW)

*The dissipation pad for the USP-4 package should be solder-plated in reference mount pattern and metal masking so as to enhance mounting strength and heat release. If the pad needs to be connected to other pins, it should be connected to the V_{SS} (No. 2) pin.

■PIN ASSIGNMENT

PIN NUMBER				PIN NAME	FUNCTIONS
USP-4	SOT-25	SOT89-5	SOT-89		
4	1	4	3	V_{IN}	Power Input
1	5	5	1	V_{OUT}	Output
2	2	2	2	V_{SS}	Ground
3	3	3	-	CE	ON/OFF Control
-	4	1	-	NC	No Connection

■PIN FUNCTION ASSIGNMENT

XC6503 Series (A/B Type)

PIN NAME	LOGIC	IC OPERATION
CE	L	Operation OFF
	H	Operation ON
	OPEN	Unstable

XC6503 Series (C/D Type)

PIN NAME	LOGIC	IC OPERATION
CE	L	Operation OFF
	H	Operation ON
	OPEN	Operation OFF

* Please avoid the state of OPEN, and connect CE pin to any arbitrary voltage.

Downloaded from Arrow.com.

■ABSOLUTE MAXIMUM RATINGS

Ta=25℃

PARAMETER		SYMBOL	RATINGS	UNITS
Input Voltage		V_{IN}	V_{SS} - 0.3 ~ V_{SS} + 6.5	V
Output Current		I_{OUT}	850 (*1)	mA
Output Voltage		V_{OUT}	V_{SS} - 0.3 ~ V_{IN} + 0.3≦V_{SS} + 6.5	V
CE Input Voltage		V_{CE}	V_{SS}-0.3 ~ V_{SS}+ 6.5	V
Power Dissipation	USP-4	Pd	120 (IC only)	mW
			1000(40mm x 40mm Standard) (*2)	
	SOT-25		250 (IC only)	
			600(40mm x 40mm Standard) (*2)	
	SOT-89		500 (IC only)	
			1000(40mm x 40mm Standard) (*2)	
	SOT-89-5		500 (IC only)	
			1300(40mm x 40mm Standard) (*2)	
			1750(JESD51-7 board) (*2)	
Operating Ambient Temperature		Topr	-40 ~ 85	℃
Storage Temperature		Tstg	-55 ~ 125	℃

(*1) Pd＞(V_{IN}-V_{OUT})×I_{OUT}

(*2) The power dissipation figure shown is PCB mounted and is for reference only
Please refer to PACKAGING INFORMATION for the mounting condition.

Downloaded from Arrow.com.

■ELECTRICAL CHARACTERISTICS

●XC6503 A/B/C/D Type

Ta=25℃

PARAMETER	SYMBOL	CONDITIONS	MIN.	TYP.	MAX.	UNITS	CIRCUITS
Output Voltage	$V_{OUT(E)}$ (*2)	2.0V＞$V_{OUT(T)}$(*3), V_{CE}=V_{IN}, I_{OUT}=10mA	−0.02 (*4)	$V_{OUT(T)}$	+0.02 (*4)	V	①
		2.0V≦$V_{OUT(T)}$, V_{CE}=V_{IN}, I_{OUT}=10mA	×0.99 (*4)		×1.01 (*4)		
Maximum Output Current	I_{OUTMAX}	V_{CE}=V_{IN}	500	-	-	mA	①
Load Regulation	ΔV_{OUT}	V_{CE}=V_{IN}, 0.1mA≦I_{OUT}≦300mA	-	20	50	mV	①
Dropout Voltage (*5)	Vdif	V_{CE}=V_{IN} , I_{OUT}=300mA	-	E-1(*8)		mV	①
Supply Current	I_{SS}	V_{IN}=V_{CE}=6.0V, I_{OUT}=0mA	-	15	30	μA	②
Stand-by Current	I_{STB}	V_{IN}=6.0V, V_{CE}=V_{SS}	-	0.01	0.1	μA	②
Line Regulation	ΔV_{OUT}/ ($\Delta V_{IN} \cdot V_{OUT}$)	$V_{OUT(T)}$+0.5V≦V_{IN}≦6.0V, V_{CE}=V_{IN}, I_{OUT}=30mA	-	E-2(*9)		%/V	①
Input Voltage	V_{IN}		1.7	-	6.0	V	①
Output Voltage Temperature Characteristics	ΔV_{OUT}/ ($\Delta Topr \cdot V_{OUT}$)	V_{CE}=V_{IN}, I_{OUT}=30mA -40℃≦Topr≦85℃	-	±30	-	ppm/℃	①
Power Supply Rejection Ratio	PSRR	$V_{OUT(T)}$≦4.75V V_{IN}={$V_{OUT(T)}$+1.0}V_{DC}+0.5Vp-p_{AC} V_{CE}=V_{IN}, I_{OUT}=30mA, f=1kHz	-	55	-	dB	③
		$V_{OUT(T)}$≧4.80V V_{IN}=5.75V_{DC}+0.5Vp-p_{AC} V_{CE}=V_{IN}, I_{OUT}=30mA, f=1kHz					
Current Limit	I_{LIM}	V_{CE}=V_{IN}	510	630	750	mA	①
Short-circuit Current	I_{SHORT}	V_{CE}=V_{IN} Short V_{OUT} to V_{SS} level	-	120	210	mA	①
CE High Level Voltage	V_{CEH}		1.0	-	6.0	V	①
CE Low Level Voltage	V_{CEL}		V_{SS}	-	0.3	V	①
CE High Level Current	I_{CEH}	V_{IN}=V_{CE}=6.0V A/B type	-0.1	-	0.1	μA	①
		V_{IN}=V_{CE}=6.0V C/D type	3.5	6	10		
CE Low Level Current	I_{CEL}	V_{CE}=V_{SS}	-0.1	-	0.1	μA	①
C_L Discharge Resistance(*10)	R_{DCHG}	V_{IN}=6.0V, V_{OUT}=5.0V, V_{CE}=V_{SS}	300	430	500	Ω	①
Thermal Shutdown Detect Temperature	T_{TSD}	Junction Temperature	-	150	-	℃	−
Thermal Shutdown Release Temperature	T_{TSR}	Junction Temperature	-	125	-	℃	−
Thermal Shutdown Hysteresis Width	T_{HYS}	T_{TSD}-T_{TSR}	-	25	-	℃	−

NOTE:
(*1) Unless otherwise stated regarding input voltage conditions, V_{IN}=$V_{OUT(T)}$(*3)+1.0V.
(*2) $V_{OUT(E)}$: Effective output voltage
(i.e. the output voltage when "$V_{OUT(T)}$+1.0V" is provided at the V_{IN} pin while maintaining a certain I_{OUT} value.)
(*3) $V_{OUT(T)}$: Nominal output voltage
(*4) Characteristics of the actual $V_{OUT(E)}$ by setting output voltage is shown in the voltage chart.
(*5) Vdif=V_{IN1}(*7)−V_{OUT1}(*6)
(*6) V_{OUT1} is a voltage equal to 98% of the output voltage whenever an amply stabilized I_{OUT} {$V_{OUT(T)}$+1.0V} is input
(*7) V_{IN1} is an input voltage when V_{OUT1} appears at the V_{OUT} pin while the input voltage is gradually decreased.
(*8) E-1:DROPOUT VOLTAGE (Refer to Voltage Chart.)
(*9) E-2:LINE REGULATION (Refer to Voltage Chart.)
(*10) This function is built in the XC6503B/D series only.
The XC6503A/C series discharges by only R1+ R2 resistors as shown in the block diagrams.

Downloaded from Arrow.com.

■ELECTRICAL CHARACTERISTICS (Continued)

●XC6503P Type

Ta=25℃

PARAMETER	SYMBOL	CONDITIONS	MIN.	TYP.	MAX.	UNITS	CIRCUITS
Output Voltage	$V_{OUT(E)}$ (*2)	2.0V＞$V_{OUT(T)}$(*3), I_{OUT}=10mA	−0.02 (*4)	$V_{OUT(T)}$	+0.02 (*4)	V	①
		2.0V≦$V_{OUT(T)}$, I_{OUT}=10mA	×0.99 (*4)		×1.01 (*4)		
Maximum Output Current	I_{OUTMAX}		500	-	-	mA	①
Load Regulation	ΔV_{OUT}	0.1mA≦I_{OUT}≦300mA	-	20	50	mV	①
Dropout Voltage (*5)	Vdif	I_{OUT}=300mA	-	E-1(*8)		mV	①
Supply Current	I_{SS}	V_{IN}= 6.0V, I_{OUT}=0mA	-	15	30	μA	②
Line Regulation	ΔV_{OUT}/ ($\Delta V_{IN} \cdot V_{OUT}$)	$V_{OUT(T)}$+0.5V≦V_{IN}≦6.0V, I_{OUT}=30mA	-	E-2(*9)		%/V	①
Input Voltage	V_{IN}		1.7	-	6.0	V	①
Output Voltage Temperature Characteristics	ΔV_{OUT}/ ($\Delta Topr \cdot V_{OUT}$)	I_{OUT}=30mA -40℃≦Topr≦85℃	-	±30	-	ppm/℃	①
Power Supply Rejection Ratio	PSRR	$V_{OUT(T)}$≦4.75V V_{IN}={$V_{OUT(T)}$+1.0}V_{DC}+0.5Vp-p_{AC} I_{OUT}=30mA, f=1kHz	-	55	-	dB	③
		$V_{OUT(T)}$≧4.80V V_{IN}=5.75V_{DC}+0.5Vp-p_{AC} I_{OUT}=30mA, f=1kHz					
Current Limit	I_{LIM}		510	630	750	mA	①
Short-circuit Current	I_{SHORT}	Short V_{OUT} to V_{SS} level	-	120	210	mA	①
Thermal Shutdown Detect Temperature	T_{TSD}	Junction Temperature	-	150	-	℃	−
Thermal Shutdown Release Temperature	T_{TSR}	Junction Temperature	-	125	-	℃	−
Thermal Shutdown Hysteresis Width	T_{HYS}	T_{TSD}-T_{TSR}	-	25	-	℃	−

NOTE:
(*1) Unless otherwise stated regarding input voltage conditions, V_{IN}=$V_{OUT(T)}$(*3)+1.0V.
(*2) $V_{OUT(E)}$: Effective output voltage
(i.e. the output voltage when "$V_{OUT(T)}$+1.0V" is provided at the V_{IN} pin while maintaining a certain I_{OUT} value.)
(*3) $V_{OUT(T)}$: Nominal output voltage
(*4) Characteristics of the actual $V_{OUT(E)}$ by setting output voltage is shown in the voltage chart.
(*5) Vdif＝V_{IN1}(*7)－V_{OUT1}(*6)
(*6) V_{OUT1} is a voltage equal to 98% of the output voltage whenever an amply stabilized I_{OUT} {$V_{OUT(T)}$+1.0V} is input
(*7) V_{IN1} is an input voltage when V_{OUT1} appears at the V_{OUT} pin while the input voltage is gradually decreased.
(*8) E-1:DROPOUT VOLTAGE (Refer to Voltage Chart.)
(*9) E-2:LINE REGULATION (Refer to Voltage Chart.)

Downloaded from Arrow.com.

■ELECTRICAL CHARACTERISTICS (Continued)

●Voltage Chart

Ta=25℃

	E-0		E-1		E-2			E-0		E-1		E-2	
NOMINAL VOLTAGE (V)	OUTPUT VOLTAGE (V)		DROPOUT VOLTAGE (mV)		LINE REGULATION (%/V)		NOMINAL VOLTAGE (V)	OUTPUT VOLTAGE (V)		DROPOUT VOLTAGE (mV)		LINE REGULATION (%/V)	
$V_{OUT(T)}$	$V_{OUT(E)}$		V_{dif}		$\Delta V_{OUT}/(\Delta V_{IN} \cdot V_{OUT})$		$V_{OUT(T)}$	$V_{OUT(E)}$		V_{dif}		$\Delta V_{OUT}/(\Delta V_{IN} \cdot V_{OUT})$	
	MIN.	MAX.	TYP.	MAX.	TYP.	MAX.		MIN.	MAX.	TYP.	MAX.	TYP.	MAX.
1.200	1.1800	1.2200	555	660	0.1	0.25	3.150	3.1185	3.1815	190	250	0.1	0.2
1.250	1.2300	1.2700	↑	↑	↑	↑	3.200	3.1680	3.2320	170	230	↑	↑
1.300	1.2800	1.3200	↑	↑	↑	0.2	3.250	3.2175	3.2825	↑	↑	↑	↑
1.350	1.3300	1.3700	↑	↑	↑	↑	3.300	3.2670	3.3330	↑	↑	↑	↑
1.400	1.3800	1.4200	440	560	↑	↑	3.350	3.3165	3.3835	↑	↑	↑	↑
1.450	1.4300	1.4700	↑	↑	↑	↑	3.400	3.3660	3.4340	↑	↑	↑	↑
1.500	1.4800	1.5200	↑	↑	↑	↑	3.450	3.4155	3.4845	↑	↑	↑	↑
1.550	1.5300	1.5700	↑	↑	↑	↑	3.500	3.4650	3.5350	↑	↑	↑	↑
1.600	1.5800	1.6200	360	450	↑	↑	3.550	3.5145	3.5855	↑	↑	↑	↑
1.650	1.6300	1.6700	↑	↑	↑	↑	3.600	3.5640	3.6360	155	210	↑	↑
1.700	1.6800	1.7200	↑	↑	↑	↑	3.650	3.6135	3.6865	↑	↑	↑	↑
1.750	1.7300	1.7700	↑	↑	↑	↑	3.700	3.6630	3.7370	↑	↑	↑	↑
1.800	1.7800	1.8200	300	390	↑	↑	3.750	3.7125	3.7875	↑	↑	↑	↑
1.850	1.8300	1.8700	↑	↑	↑	↑	3.800	3.7620	3.8380	↑	↑	↑	↑
1.900	1.8800	1.9200	↑	↑	↑	↑	3.850	3.8115	3.8885	↑	↑	↑	↑
1.950	1.9300	1.9700	↑	↑	↑	↑	3.900	3.8610	3.9390	↑	↑	↑	↑
2.000	1.9800	2.0200	265	330	↑	↑	3.950	3.9105	3.9895	↑	↑	↑	↑
2.050	2.0295	2.0705	↑	↑	↑	↑	4.000	3.9600	4.0400	↑	↑	↑	↑
2.100	2.0790	2.1210	↑	↑	↑	↑	4.050	4.0095	4.0905	↑	↑	↑	↑
2.150	2.1285	2.1715	↑	↑	↑	↑	4.100	4.0590	4.1410	↑	↑	↑	↑
2.200	2.1780	2.2220	240	310	↑	↑	4.150	4.1085	4.1915	↑	↑	↑	↑
2.250	2.2275	2.2725	↑	↑	↑	↑	4.200	4.1580	4.2420	140	195	↑	↑
2.300	2.2770	2.3230	↑	↑	↑	↑	4.250	4.2075	4.2925	↑	↑	↑	↑
2.350	2.3265	2.3735	↑	↑	↑	↑	4.300	4.2570	4.3430	↑	↑	↑	↑
2.400	2.3760	2.4240	↑	↑	↑	↑	4.350	4.3065	4.3935	↑	↑	↑	↑
2.450	2.4255	2.4745	↑	↑	↑	↑	4.400	4.3560	4.4440	↑	↑	↑	↑
2.500	2.4750	2.5250	210	270	↑	↑	4.450	4.4055	4.4945	↑	↑	↑	↑
2.550	2.5245	2.5755	↑	↑	↑	↑	4.500	4.4550	4.5450	↑	↑	↑	↑
2.600	2.5740	2.6260	↑	↑	↑	↑	4.550	4.5045	4.5955	↑	↑	↑	↑
2.650	2.6235	2.6765	↑	↑	↑	↑	4.600	4.5540	4.6460	↑	↑	↑	↑
2.700	2.6730	2.7270	↑	↑	↑	↑	4.650	4.6035	4.6965	↑	↑	↑	↑
2.750	2.7225	2.7775	↑	↑	↑	↑	4.700	4.6530	4.7470	↑	↑	↑	↑
2.800	2.7720	2.8280	190	250	↑	↑	4.750	4.7025	4.7975	↑	↑	↑	↑
2.850	2.8215	2.8785	↑	↑	↑	↑	4.800	4.7520	4.8480	↑	↑	↑	↑
2.900	2.8710	2.9290	↑	↑	↑	↑	4.850	4.8015	4.8985	↑	↑	↑	↑
2.950	2.9205	2.9795	↑	↑	↑	↑	4.900	4.8510	4.9490	↑	↑	↑	↑
3.000	2.9700	3.0300	↑	↑	↑	↑	4.950	4.9005	4.9995	↑	↑	↑	↑
3.050	3.0195	3.0805	↑	↑	↑	↑	5.000	4.9500	5.0500	↑	↑	↑	↑
3.100	3.0690	3.1310	↑	↑	↑	↑							

Downloaded from Arrow.com.

■TEST CIRCUITS

●Circuit ①

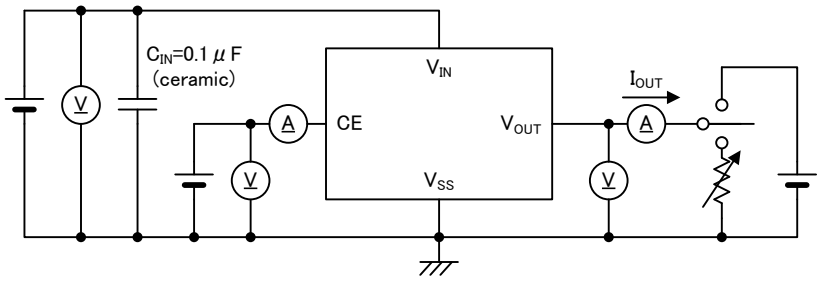

●Circuit ②

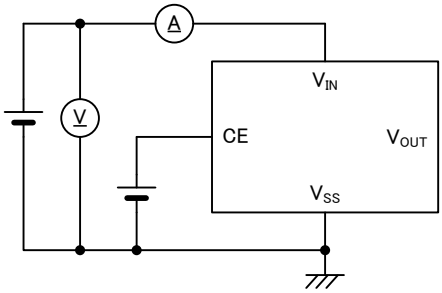

●Circuit ③

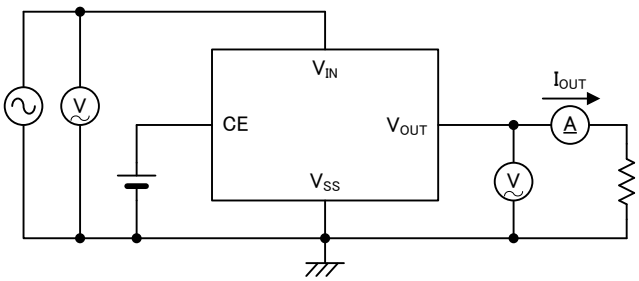

* For the XC6503P series, CE pin is connected to the V_{IN} internally.

Downloaded from Arrow.com.

■ OPERATIONAL EXPLANATION

The voltage divided by resistors R1 and R2 is compared with the internal reference voltage by the error amplifier. The P-channel MOSFET which is connected to the V_{OUT} pin is then driven by the subsequent output signal. The output voltage at the V_{OUT} pin is controlled and stabilized by a system of negative feedback. The current limit circuit and short circuit protection operate in relation to the level of output current and heat dissipation. Current limit circuit and short protection circuit operate with output current and thermal shutdown circuit will operate with heating. Further, the IC's internal circuitry can be shutdown via the CE pin signal.

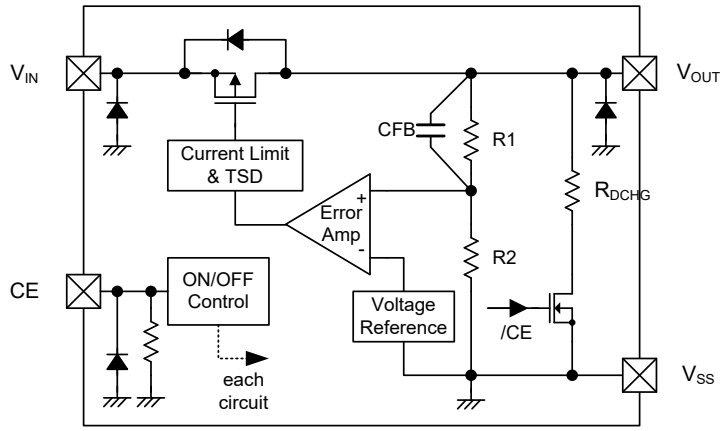

XC6503 Series D Type

XC6503D Series

<C_L Auto-Discharge Function>

XC6503 B/D can quickly discharge the electric charge at the output capacitor (C_L), when a low signal to the CE pin, which enables a whole IC circuit put into OFF state, is inputted via the N-channel transistor located between the V_{OUT} pin and the V_{SS} pin (cf. BLOCK DIAGRAM). The C_L discharge resistance is set to 430Ω when V_{IN} is 6.0V (TYP.) and V_{OUT} is 5.0V (TYP.). Moreover, discharge time of the output capacitor (C_L) is set by the C_L auto-discharge resistance (R_{DCHG}) and the output capacitor (C_L). By setting time constant of a C_L auto-discharge resistance value (R_{DCHG}) and an output capacitor value (C_L) as τ (τ =C x R), the output voltage after discharge via the N-channel transistor is calculated by the following formula.

$$V = V_{OUT} \times e^{-t/\tau}, \quad or \quad t = \tau \ln (V_{OUT(E)} / V)$$

(V : Output voltage after discharge, $V_{OUT(E)}$: Initial Output voltage, t: Discharge time,
τ : C_L auto-discharge resistance $R_{DCHG} \times C_L$ Output capacitance

<Current Limiter, Short-Circuit Protection>

The protection circuit operates as a combination of an output current limiter and fold-back short circuit protection. When load current reaches the current limit level, the output voltage drops. As a result, the load current starts to reduce with showing fold-back curve. The output current finally falls at the level of 120mA when the V_{OUT} pin is short-circuited.

<Thermal Shutdown>

When the junction temperature of the built-in driver transistor reaches the temperature limit, the thermal shutdown circuit operates and the driver transistor will be set to OFF. The IC resumes its operation when the thermal shutdown function is released and the IC's operation is automatically restored because the junction temperature drops to the level of the thermal shutdown release voltage.

<CE Pin>

The IC's internal circuitry can be shutdown via the signal from the CE pin with the XC6503 A/B/C/D series. In shutdown mode, output at the V_{OUT} pin will be pulled down to the V_{SS} level via R1, R2 and C_L auto-discharge resistance R_{DCHG}. Please note the XC6503P does not have the CE pin.

The XC6503 C/D has a pulled down resistor at the CE pin in order to avoid an unstable operation with the CE pin open (the CE pin is left open, operation will be stopped). However, the CE pin input current will increase slightly through the pulled down resistor when operating. If the correct output voltage is applied to the CE pin, the logic is fixed and the IC will operate normally. However, if the medium voltage is input, supply current may increase as a result of an internal through current.

Downloaded from Arrow.com.

■ NOTES ON USE

1. For temporary, transitional voltage drop or voltage rising phenomenon, the IC is liable to malfunction should the ratings be exceeded.

2. The XC6503 series operates even if without attaching an output capacitor. However, when wiring impedance is high, operations may become unstable due to noise and/or phase lag depending on output current. Please wire the input capacitor (C_{IN}) and the output capacitor (C_L) as close to the IC as possible.

3. The XC6503 installs fold-back current limit circuits. When start-up, this fold-back load curve affects its start-up characteristics. The XC6503 having output current under 2.4V and Load Resistance (R_{LOAD}) ≧ 4.8Ω may not happen to start-up with the load conditions below. In these cases, sequence control should be taken for connecting a load after the start-up execution.

Start-up Condition : Load Resistance R_{LOAD} ≧ 4.8Ω

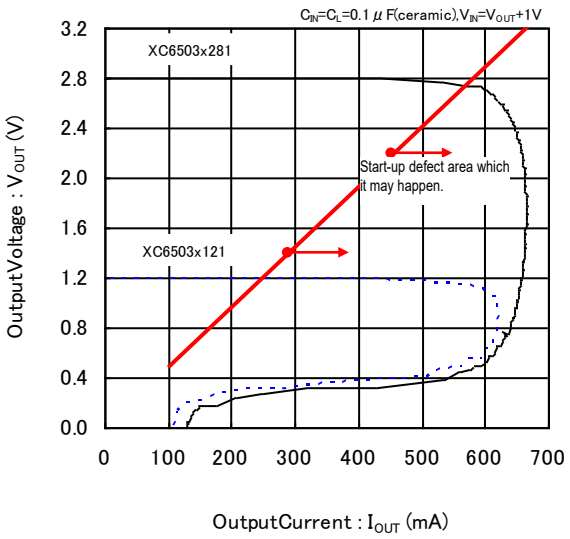

●CONDITION

Output Voltage	Load Resistance	Output Current
1.2V	≧4.8Ω	≦250mA
1.5V	≧4.8Ω	≦312mA
1.8V	≧4.8Ω	≦375mA

4. Torex places an importance on improving our products and its reliability.
However, by any possibility, we would request user fail-safe design and post-aging treatment on system or equipment.

Downloaded from Arrow.com.

■TYPICAL PERFORMANCE CHARACTERISTICS

(1) OutputVoltage v.s. OutputCurrent

XC6503x121xx

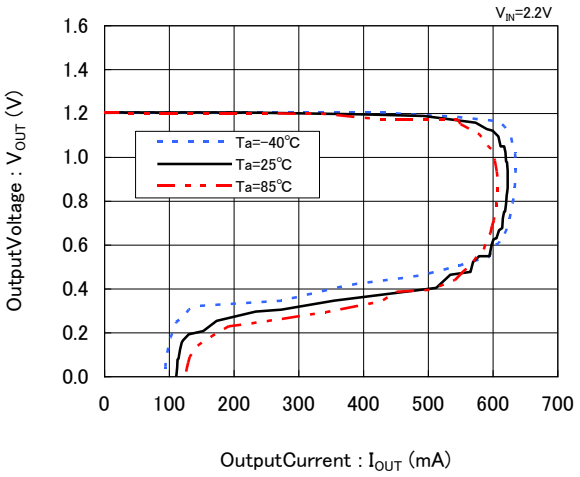

XC6503x121xx

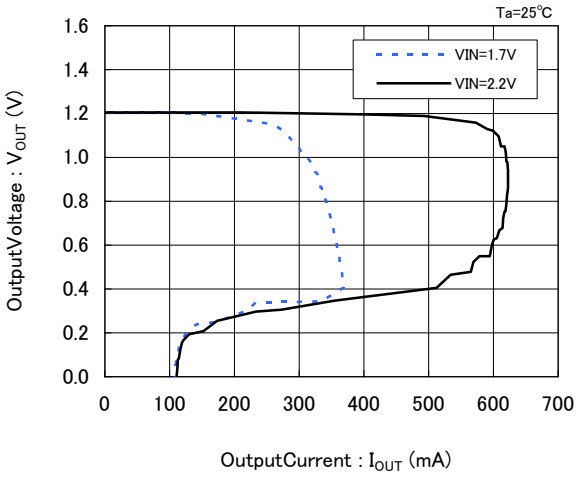

XC6503x281xx

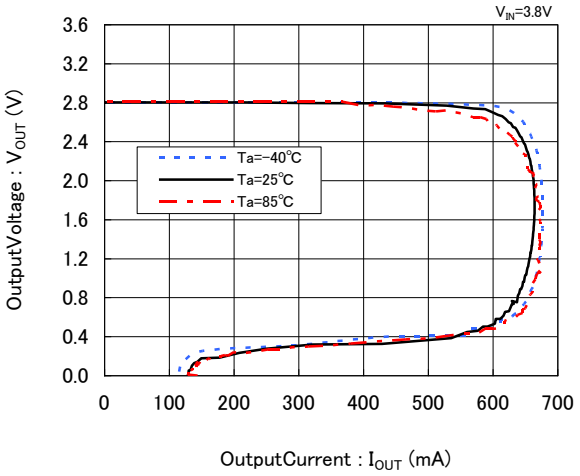

XC6503x281xx

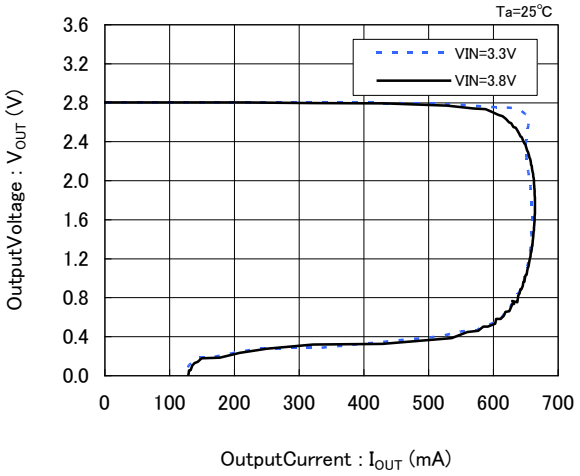

(2) OutputVoltage v.s. InputVoltage

XC6503x121xx

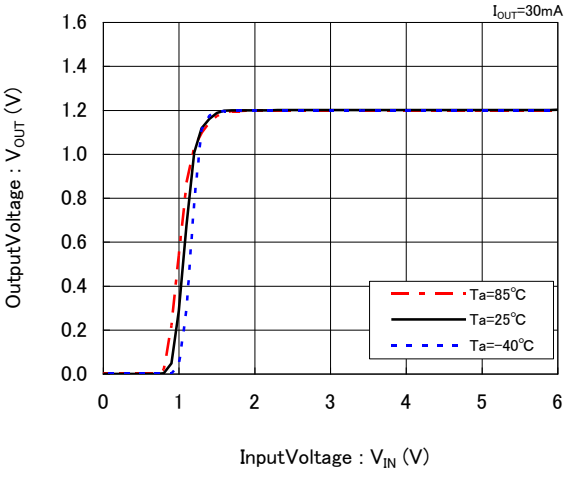

XC6503x121xx

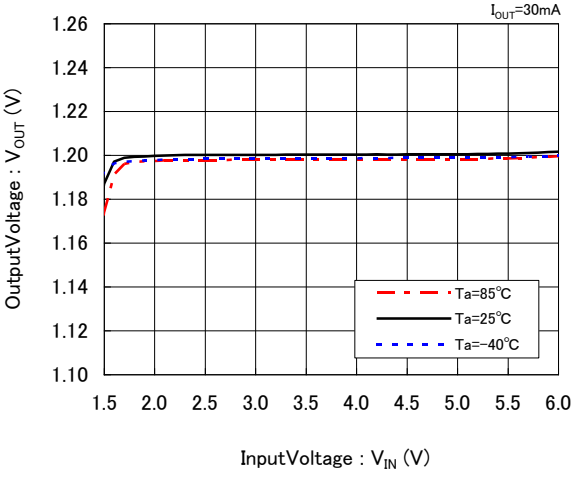

Downloaded from Arrow.com.

■TYPICAL PERFORMANCE CHARACTERISTICS (Continued)

(2) OutputVoltage v.s. InputVoltage

XC6503x281xx

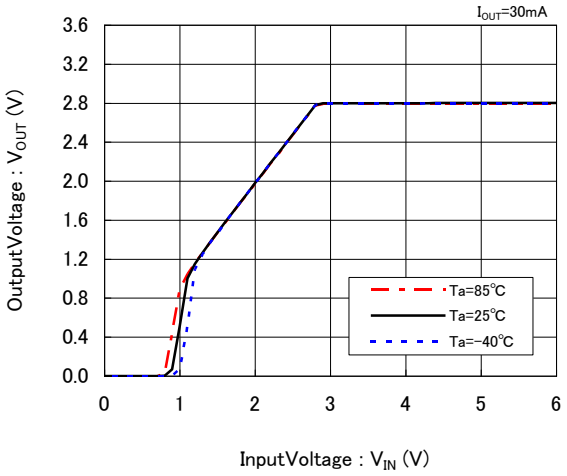

XC6503x281xx

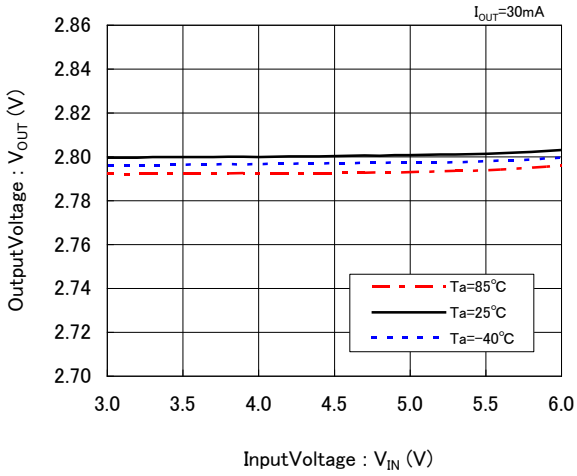

XC6503x501xx

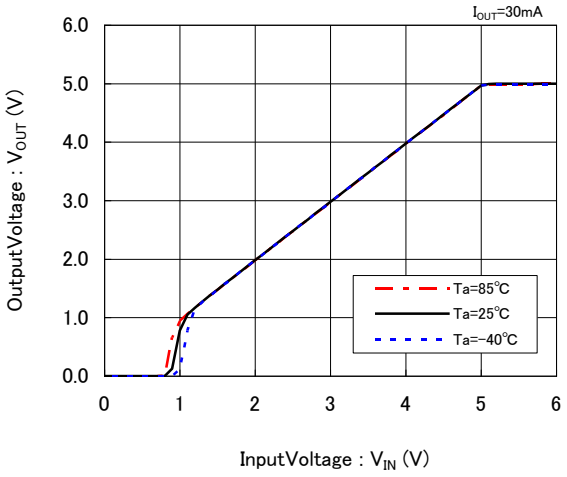

XC6503x501xx

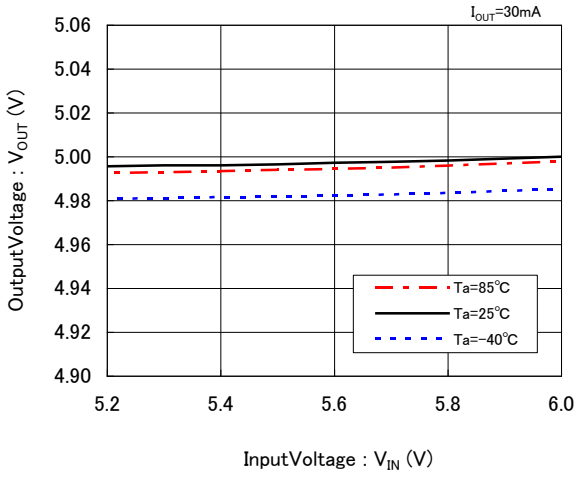

(3) DropoutVoltage v.s. OutputCurrent

XC6503x121xx

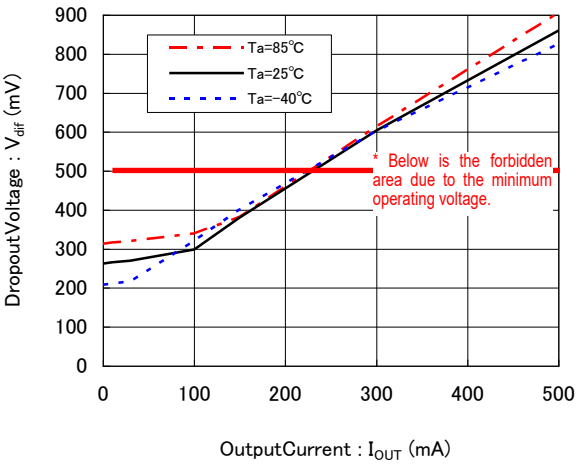

XC6503x281xx

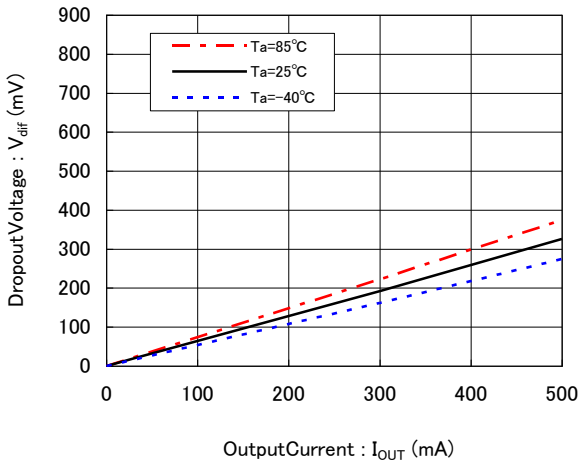

Downloaded from Arrow.com.

■TYPICAL PERFORMANCE CHARACTERISTICS (Continued)

(3) DropoutVoltage v.s. OutputCurrent

XC6503x501xx

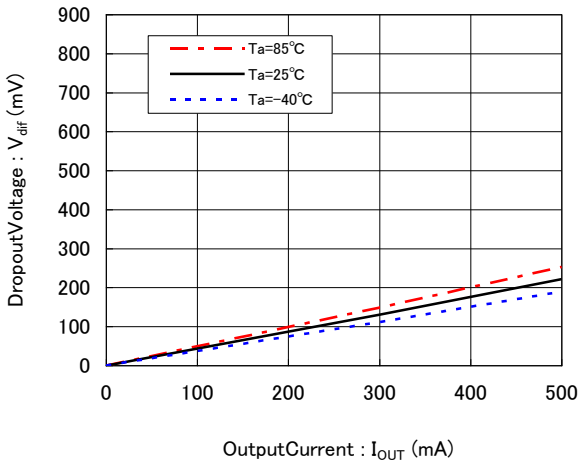

(4) SupplyCurrent v.s. InputVoltage

XC6503x121xx

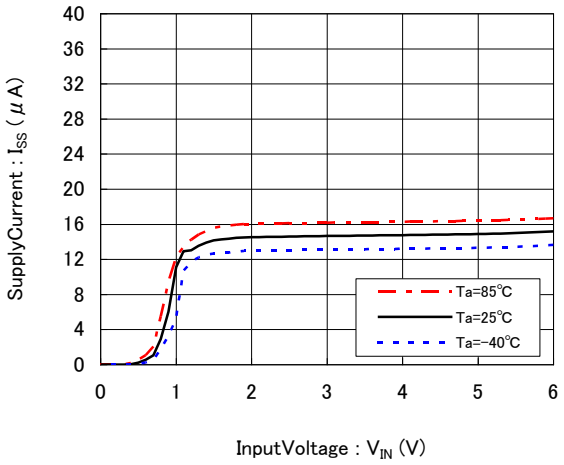

XC6503x281xx

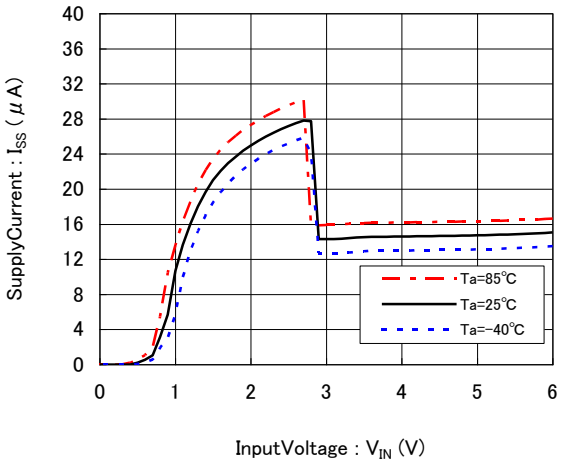

XC6503x501xx

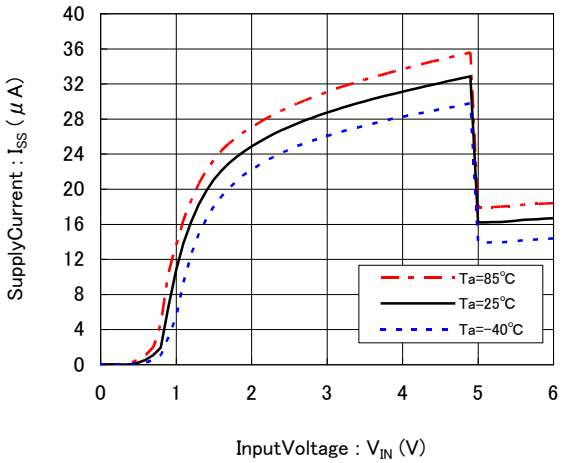

Downloaded from Arrow.com.

■TYPICAL PERFORMANCE CHARACTERISTICS (Continued)

(5) OutputVoltage v.s. AmbientTemperature

XC6503x121xx

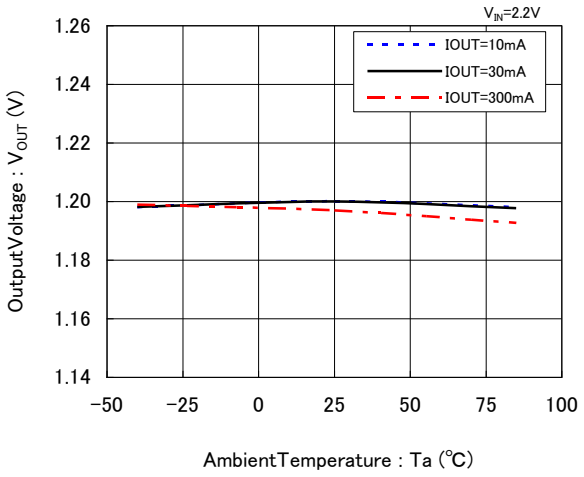

XC6503x281xx

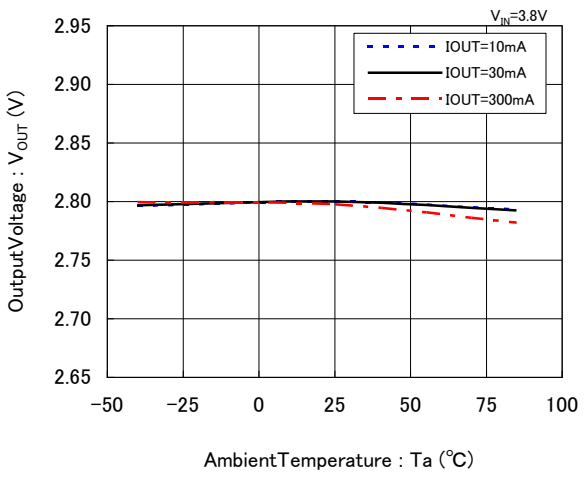

XC6503x501xx

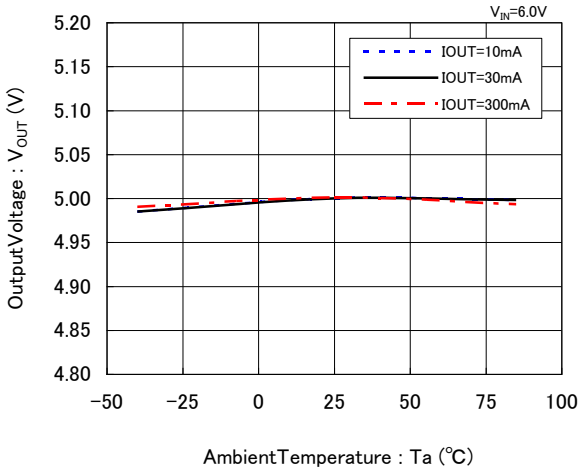

(6) Rising Respose Time

XC6503x121xx

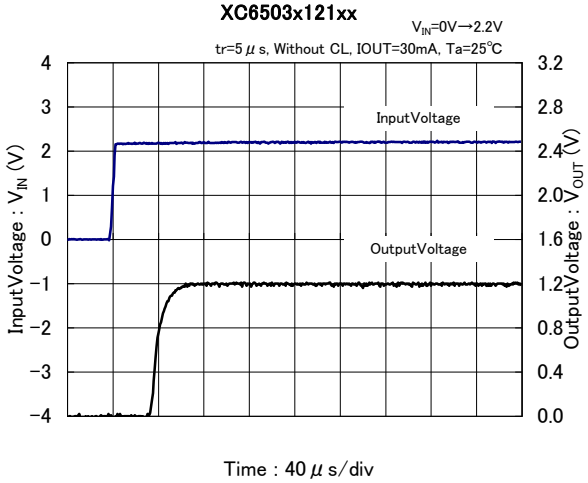

XC6503x281xx

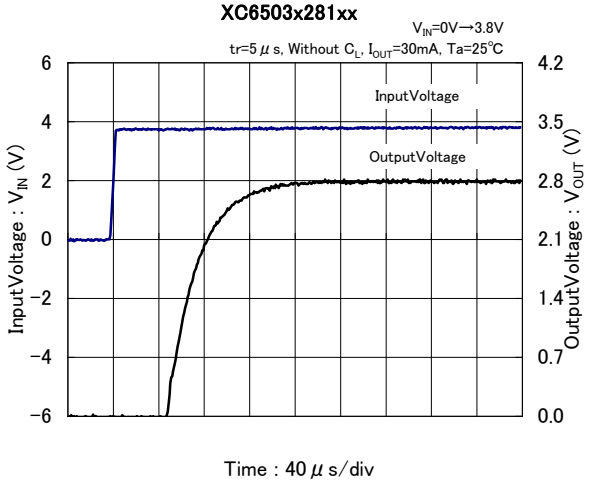

Downloaded from Arrow.com.

■TYPICAL PERFORMANCE CHARACTERISTICS (Continued)

(6) Rising Respose Time

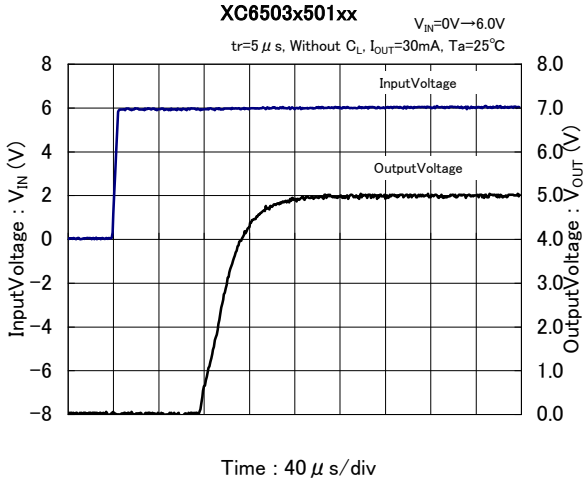

(7) Rush Current

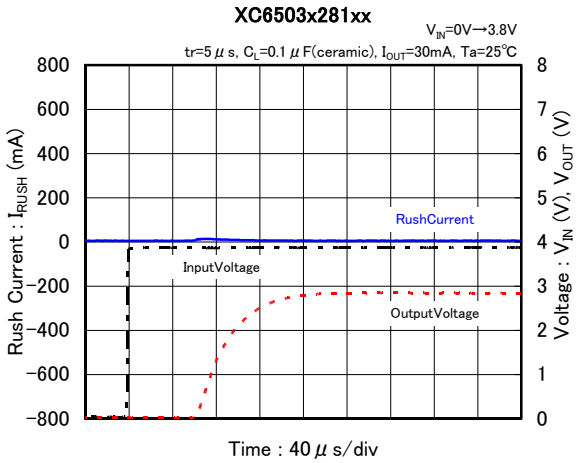

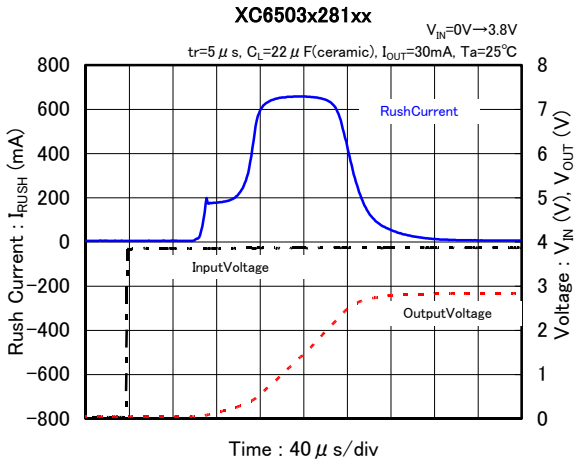

(8) CE Rising Respose Time

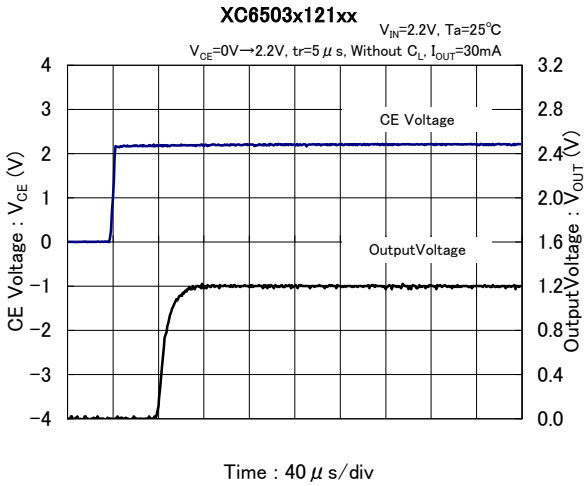

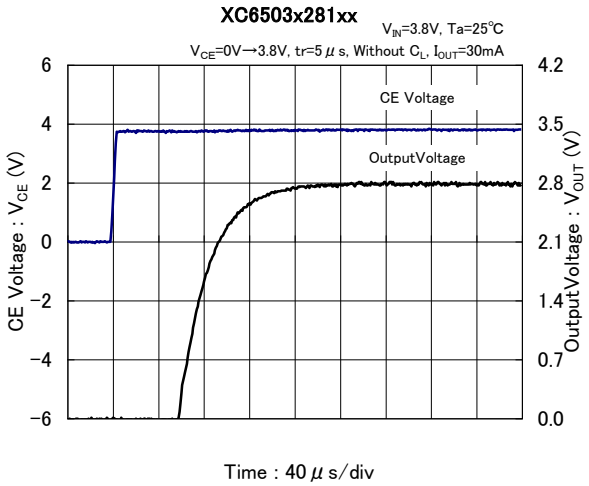

Downloaded from Arrow.com.

■TYPICAL PERFORMANCE CHARACTERISTICS (Continued)

(8) CE Rising Respose Time

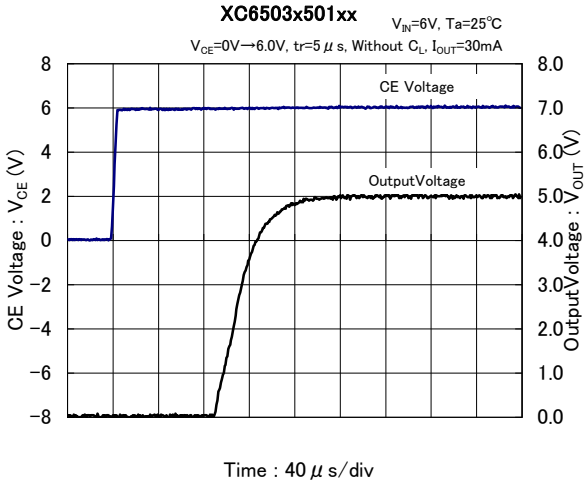

(9) Line transient response

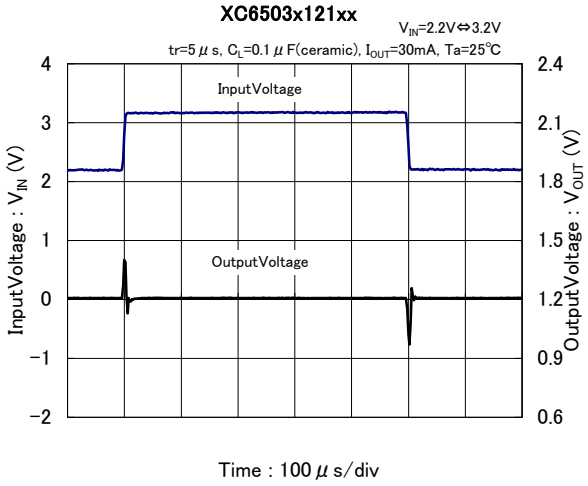

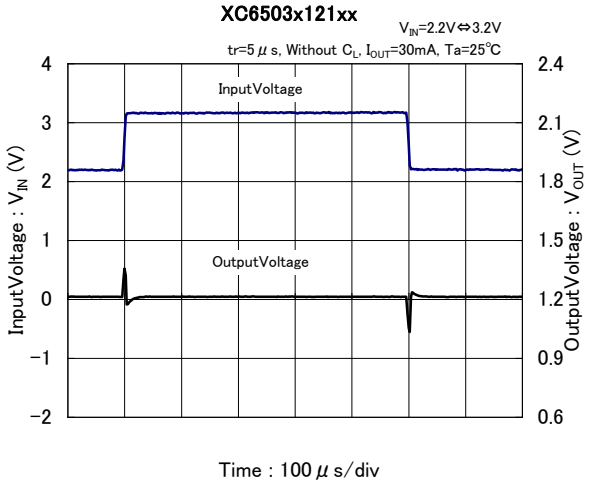

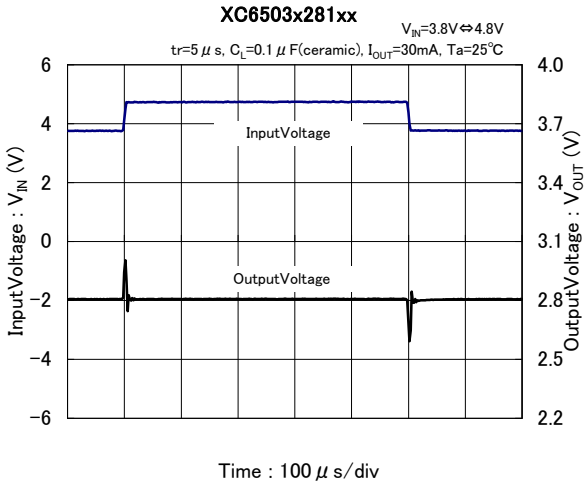

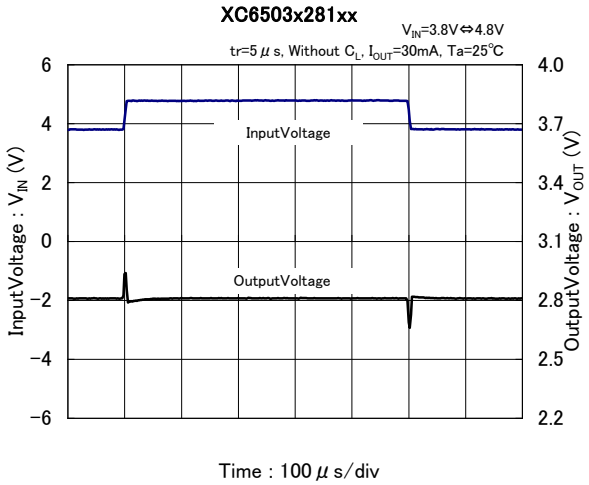

Downloaded from Arrow.com.

■TYPICAL PERFORMANCE CHARACTERISTICS (Continued)

(9) Line transient response

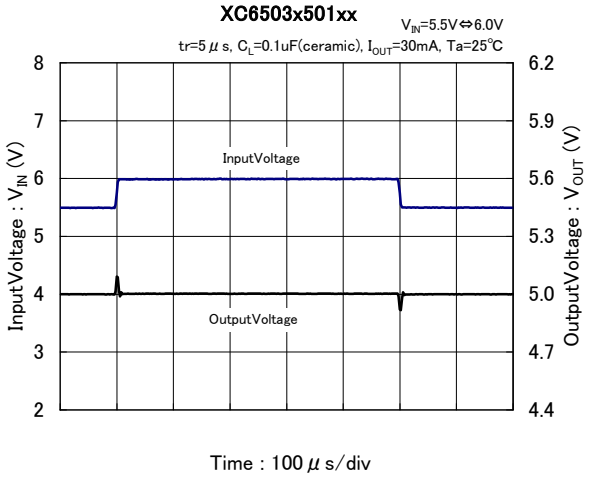

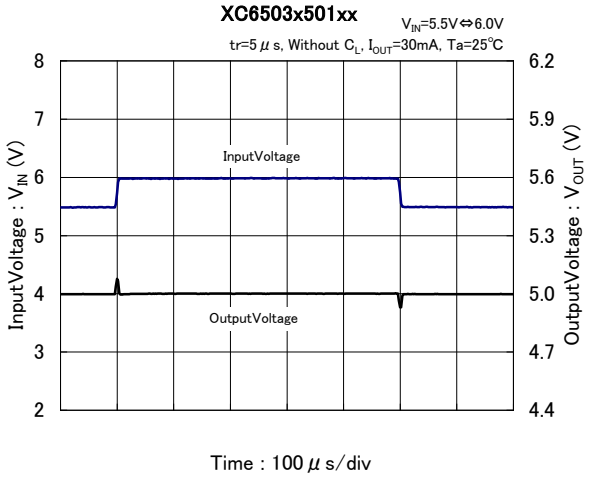

(10) Load transient response

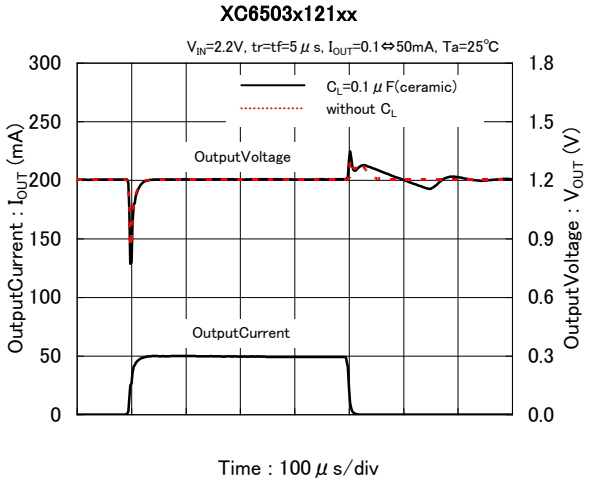

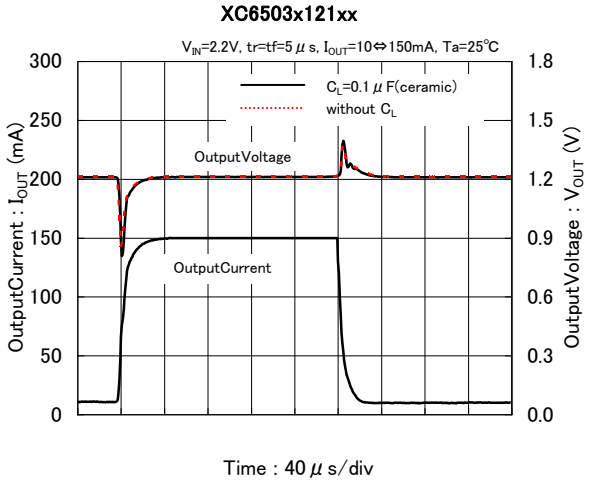

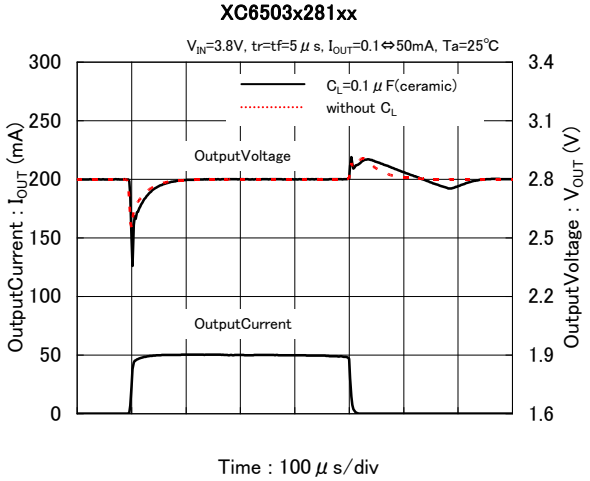

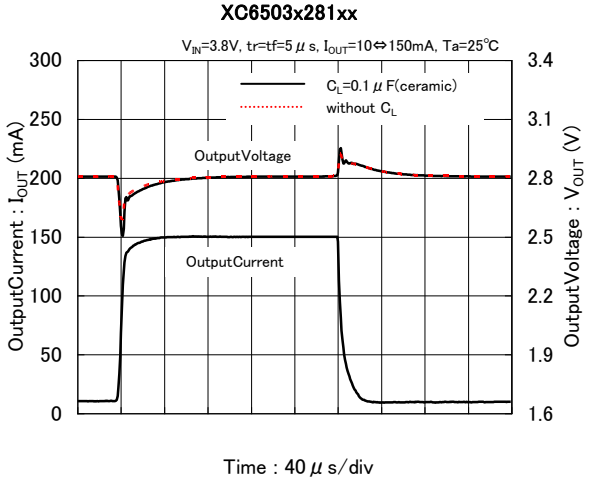

Downloaded from Arrow.com.

■TYPICAL PERFORMANCE CHARACTERISTICS (Continued)

(10) Load transient response

XC6503x501xx

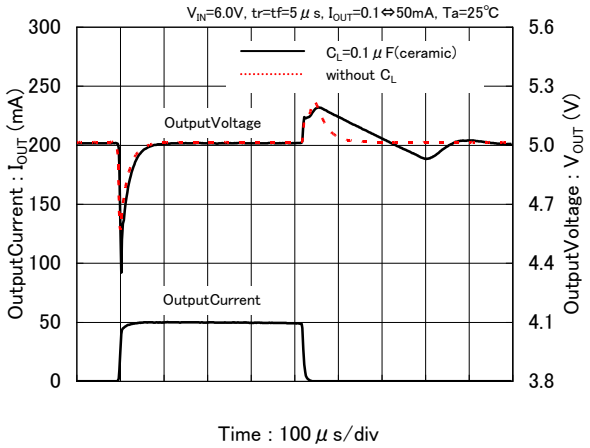

XC6503x501xx

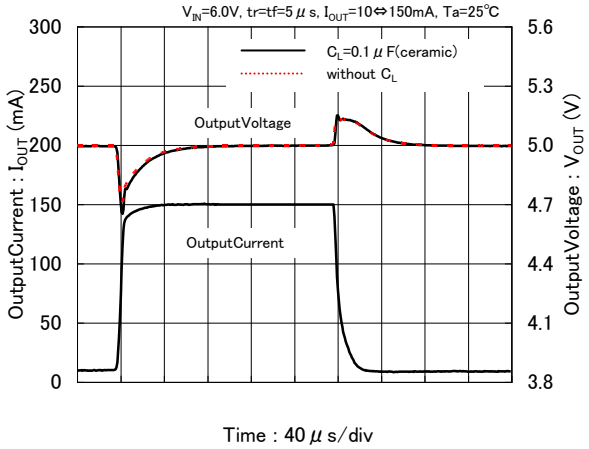

(11) Ripple Rejection Ratio

XC6503x121xx

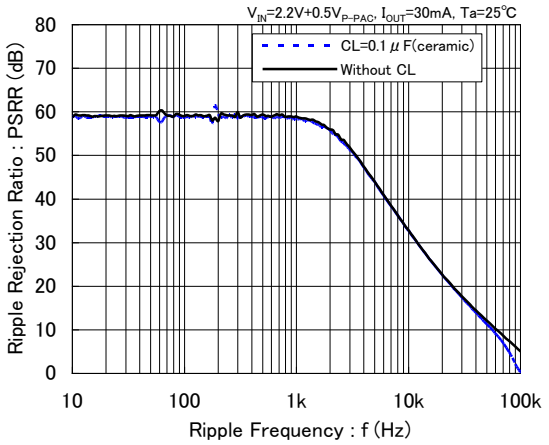

XC6503x281xx

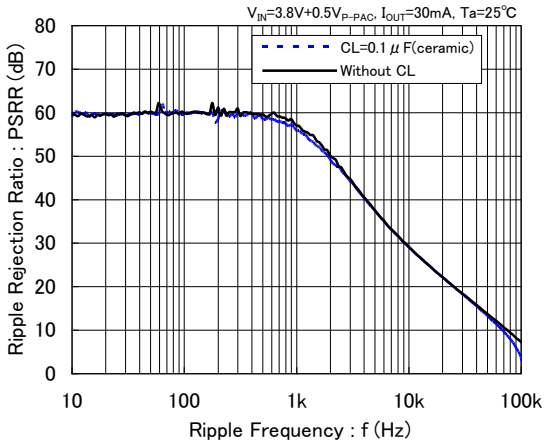

XC6503x501xx

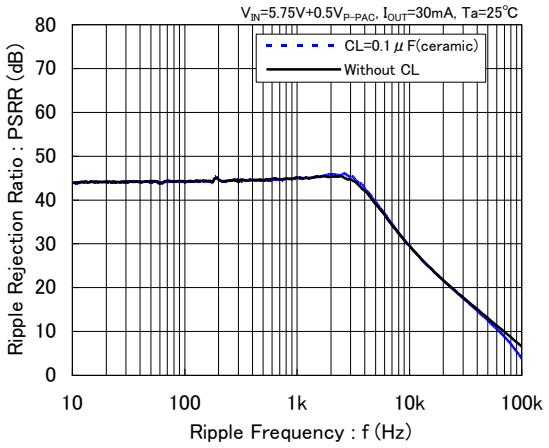

Downloaded from Arrow.com.

■PACKAGING INFORMATION

For the latest package information go to, www.torexsemi.com/technical-support/packages

PACKAGE	OUTLINE / LAND PATTERN	THERMAL CHARACTERISTICS
SOT-25	SOT-25 PKG	SOT-25 Power Dissipation
SOT-89	SOT-89 PKG	SOT-89 Power Dissipation
SOT-89-5	SOT-89-5 PKG	SOT-89-5 Power Dissipation
USP-4	USP-4 PKG	USP-4 Power Dissipation

Downloaded from Arrow.com.

■MARKING RULE

●SOT-25(Under dot), SOT-89, SOT-89-5, USP-4

① represents product series.

MARK	PRODUCT SERIES
1	XC6503******-G

② represents type of regulators.

MARK				PRODUCT SERIES	PACKAGE
OUTPUT VOLTAGE 0.1V INCREMENTS		OUTPUT VOLTAGE 0.05V INCREMENTS			
VOLTAGE= 1.2~4.1V	VOLTAGE= 4.2~5.0V	VOLTAGE= 1.25~4.15V	VOLTAGE= 4.25~4.95V		
0	1	2	3	XC6503A*****-G	SOT-25/SOT-89-5/USP-4
				XC6503P*****-G	SOT-89
4	5	6	7	XC6503B*****-G	SOT-25/SOT-89-5/USP-4
8	9	A	B	XC6503C*****-G	SOT-25/SOT-89-5/USP-4
C	D	E	F	XC6503D*****-G	SOT-25/SOT-89-5/USP-4

③ represents output voltage.

MARK	OUTPUT VOLTAGE (V)				MARK	OUTPUT VOLTAGE (V)			
0	1.20	4.20	1.25	4.25	F	2.70	-	2.75	-
1	1.30	4.30	1.35	4.35	H	2.80	-	2.85	-
2	1.40	4.40	1.45	4.45	K	2.90	-	2.95	-
3	1.50	4.50	1.55	4.55	L	3.00	-	3.05	-
4	1.60	4.60	1.65	4.65	M	3.10	-	3.15	-
5	1.70	4.70	1.75	4.75	N	3.20	-	3.25	-
6	1.80	4.80	1.85	4.85	P	3.30	-	3.35	-
7	1.90	4.90	1.95	4.95	R	3.40	-	3.45	-
8	2.00	5.00	2.05	-	S	3.50	-	3.55	-
9	2.10	-	2.15	-	T	3.60	-	3.65	-
A	2.20	-	2.25	-	U	3.70	-	3.75	-
B	2.30	-	2.35	-	V	3.80	-	3.85	-
C	2.40	-	2.45	-	X	3.90	-	3.95	-
D	2.50	-	2.55	-	Y	4.00	-	4.05	-
E	2.60	-	2.65	-	Z	4.10	-	4.15	-

④⑤ represents production lot number
01 to 09, 0A to 0Z, 11 to 9Z, A1 to A9, AA to AZ, B1 to ZZ repeated. (G, I, J, O, Q, W excluded)
* No character inversion used.

●SOT-25(Under dot)

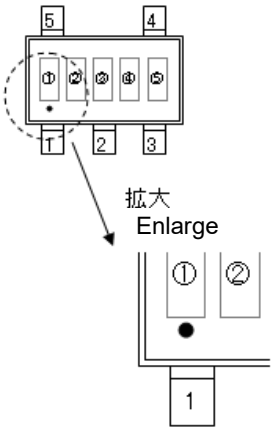

●SOT-89-5

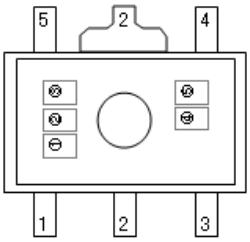

●USP-4

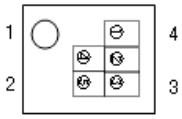

●SOT-89

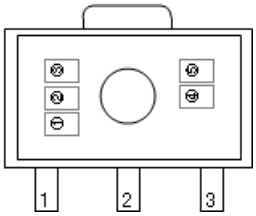

Downloaded from Arrow.com.

1. The product and product specifications contained herein are subject to change without notice to improve performance characteristics. Consult us, or our representatives before use, to confirm that the information in this datasheet is up to date.

2. The information in this datasheet is intended to illustrate the operation and characteristics of our products. We neither make warranties or representations with respect to the accuracy or completeness of the information contained in this datasheet nor grant any license to any intellectual property rights of ours or any third party concerning with the information in this datasheet.

3. Applicable export control laws and regulations should be complied and the procedures required by such laws and regulations should also be followed, when the product or any information contained in this datasheet is exported.

4. The product is neither intended nor warranted for use in equipment of systems which require extremely high levels of quality and/or reliability and/or a malfunction or failure which may cause loss of human life, bodily injury, serious property damage including but not limited to devices or equipment used in 1) nuclear facilities, 2) aerospace industry, 3) medical facilities, 4) automobile industry and other transportation industry and 5) safety devices and safety equipment to control combustions and explosions. Do not use the product for the above use unless agreed by us in writing in advance.

5. Although we make continuous efforts to improve the quality and reliability of our products; nevertheless Semiconductors are likely to fail with a certain probability. So in order to prevent personal injury and/or property damage resulting from such failure, customers are required to incorporate adequate safety measures in their designs, such as system fail safes, redundancy and fire prevention features.

6. Our products are not designed to be Radiation-resistant.

7. Please use the product listed in this datasheet within the specified ranges.

8. We assume no responsibility for damage or loss due to abnormal use.

9. All rights reserved. No part of this datasheet may be copied or reproduced unless agreed by Torex Semiconductor Ltd in writing in advance.

TOREX SEMICONDUCTOR LTD.

Downloaded from Arrow.com.