PRODUCT NUMBER: 0906-0-15-20-76-14-11-0

www.mill-max.com
DATA SHEET

0906-X-XX-20-7X-14-11-0

Solder mount in .020 min. mounting hole

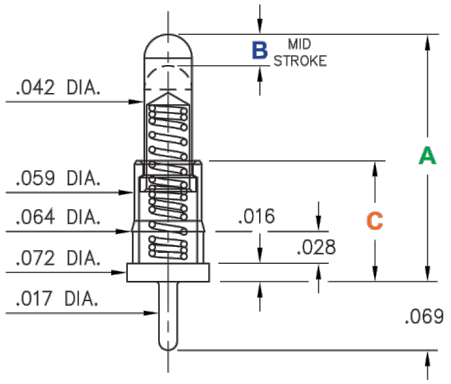

Basic Part Number	Length (A)	MID. Stroke (B)	Length (C)
0906-0	.137	.0195	.098
* 0906-1	.177	.0275	.106
* 0906-2	.197	.0275	.106
* 0906-3	.217	.0275	.106
* 0906-4	.236	.0275	.106
0906-8	.155	.0195	.106

*Available packaged on Tape & Reel

Standard Tolerances:
Lengths: ±.006
Diameters: ±.002
Angles: ±2°



General Information

1	**Product Lifecycle:**	Active
	Product Family:	Discrete Spring Loaded Pins
2	**Description:**	Spring-Loaded Pin with a Standard Tail
3	**Shell/Plunger Material:**	Brass Alloy
4	**Spring Number:**	76 - Standard Force Beryllium Copper
	Spring Material:	Beryllium Copper
5	**Operating Temperature Range:**	-55/+125° C
	Country of Origin:	USA
6	**ROHS:**	Yes

Termination Style

Target Face Type:	N/A
Tail Type:	SolderTail
Tail:	Single
Wire Termination:	N/A

Downloaded from Arrow.com.

0906-0-15-20-76-14-11-0 - SPECIFICATIONS

Product Attributes	
7 Shell/Plunger Plating:	20: Body/Plunger Plating - 20 µ" Gold over Nickel
8 Spring Plating:	14 Spring Plating - 10 µ" Gold over Nickel
Plunger Type:	Round
Plunger Diameter:	.042" (1,067mm)
Max Stroke:	.039" (0,991mm)
Rated Travel (Mid-Stroke):	.020" (0,508mm)
Spring Force (Initial):	15g
Spring Force (Mid-Stroke):	60g

Key Dimensions	
Barb/Knurl Diameter:	.064" (1,626mm)
Body Diameter:	.059" (1,499mm)
Body Length:	.082" (2,083mm)
Flange Diameter:	.072" (1,829mm)
Flange Length:	.016" (0,406mm)
Initial Height:	.137" (3,480mm)
Overall Length:	.206" (5,232mm)
Tail Diameter:	.017" (0,432mm)
Tail Length:	.069" (1,753mm)

Electrical Specifications	
Maximum Current:	8A @ 30˚ C Temp. Rise
9 Maximum Derated Current:	6.40A
Contact Resistance:	20.00mΩ Max

Mechanical Specifications	
Mechanical life (Durability):	100,000 to 1,000,000 Cycles @ Mid-Stroke
10 Shock:	No Elect. Discontinuity > 1µs @ 50g
11 Vibration:	No Elect. Discontinuity > 1µs @ 10-2000HZ, 20 G

Downloaded from Arrow.com.

Mounting Specifications	
12 **Mounting Feature:**	Through-Hole Solder Mount
Mounting Hole Type:	Plated Through Hole (PTH)
Mounting Hole:	.020" (0,508mm)
Alternate Mounting:	N/A
SMT Pad Size:	N/A

Packaging Information	
Packaging:	15 - Packaged in Bulk
Reel Size:	N/A

Environmental & Export Classifications	
REACH Status:	REACH Unaffected
ECCN:	Contact Factory
HTSUS:	8536.90.4000
Cage Code:	3N087
Moisture Sensitivity Level (MSL):	1 (Unlimited)
Special Handling Code:	UNDF
Prop 65:	N
Static Sensitive:	N

Downloaded from Arrow.com.

NOTES:

1. Part is Active and in Production, No Scheduled Obsolescence
2. Standard Tolerances:
   Lengths +/-.006" (0,15)
   Diameters: +/-.002" (0,051)
   Angles: +/- 2°
3. Brass Alloy 360 per ASTM B 16, or 385 per ASTM B455
4. Click the Link for Force vs. Travel and Current-Temperature Derating Curve
5. Storage per IEC 60512-11-(4,9,10,12) and peak operating temperature per IEC 60512-5-2, Test 5b
6. Mill-Max products labeled with the RoHS symbol are compliant with all three ROHS Directives. All of our products previously described as RoHS (2002/95/EC) and RoHS-2 (2011/65/EC) are also compliant with RoHS-3 (2015/863/EU).
7. GOLD per ASTM B 488, Type 1 (99.7% min. gold), Code C (130-200 HK {Knoop hardness}); NICKEL per ASTM B 689, Type 2 (Bright)
8. GOLD per ASTM B 488, Type 1 (99.7% min. gold), Code C (130-200 HK {Knoop hardness}), NICKEL per ASTM B 689, Type 2 (Bright)
9. Per IEC 60512-5-2; Current Carrying Capacity; Current Derating
10. Per IEC 60512-6-3: Test 6c: Shock
11. Per IEC 60512-6-4: Test 6d: Vibration (sinusoidal)
12. For through-hole solder mounting of this part, the suggestion is to make the finished hole size, at its minimum, .004" larger than the diameter being soldered into the mounting hole.

ADDITIONAL PARTS, PACKAGING & ASSEMBLY INFO

Downloaded from Arrow.com.

0906-0-15-20-76-14-11-0

Short stroke, Solder mount in .020 min. mounting hole

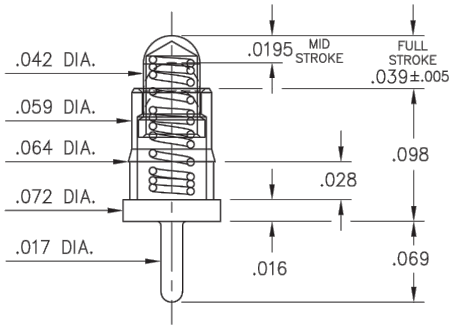

Standard Tolerances:
Lengths: ±.006
Diameters: ±.002
Angles: ±2°

0906-1-15-20-7X-14-11-0

Standard stroke, Solder mount in .020 min. mounting hole
24mm wide X 8mm pitch carrier tape: 1,200 parts per 13" reel
Order as: 0906-1-57-20-7X-14-11-0

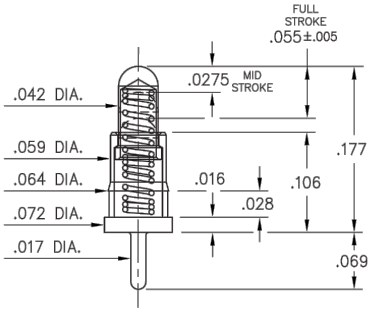



Standard Tolerances:
Lengths: ±.006
Diameters: ±.002
Angles: ±2°

0906-2-15-20-7X-14-11-0

Standard stroke, Solder mount in .020 min. mounting hole
24mm wide X 8mm pitch carrier tape: 1,200 parts per 13" reel
Order as: 0906-2-57-20-7X-14-11-0

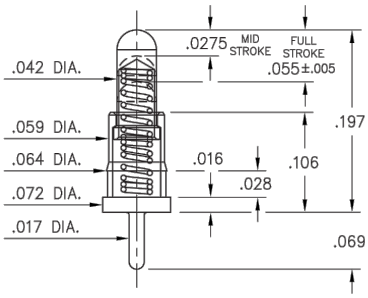



Standard Tolerances:
Lengths: ±.006
Diameters: ±.002
Angles: ±2°

0906-3-15-20-7X-14-11-0

Standard stroke, Solder mount in .020 min. mounting hole
24mm wide X 8mm pitch carrier tape: 975 parts per 13" reel
Order as: 0906-3-57-20-7X-14-11-0

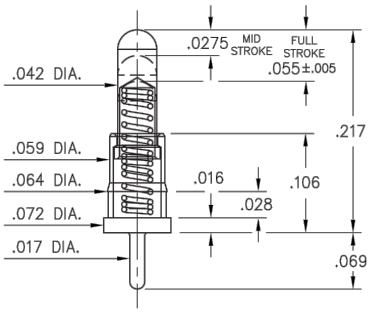



Standard Tolerances:
Lengths: ±.006
Diameters: ±.002
Angles: ±2°

0906-4-15-20-7X-14-11-0

Standard stroke, Solder mount in .020 min. mounting hole
24mm wide X 8mm pitch carrier tape: 975 parts per 13" reel
Order as: 0906-4-57-20-7X-14-11-0

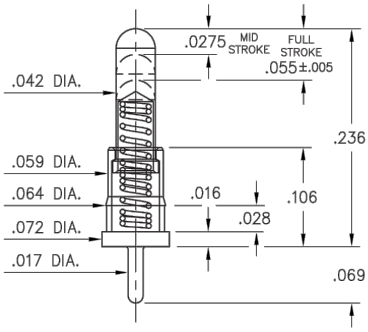



Standard Tolerances:
Lengths: ±.006
Diameters: ±.002
Angles: ±2°

0906-8-15-20-76-14-11-0

Short stroke, Solder mount in .020 min. mounting hole

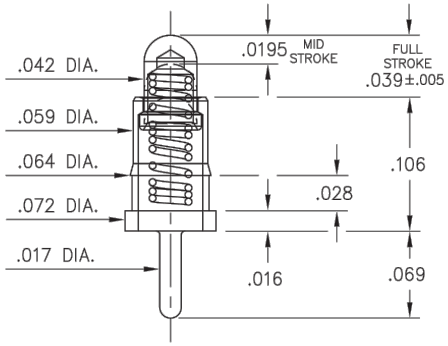

Standard Tolerances:
Lengths: ±.006
Diameters: ±.002
Angles: ±2°

SPRING:

Downloaded from Arrow.com.

#76 SPRING STANDARD FORCE SPRING	Full Stroke Capability : .039"± .005" [0,99 ± 0,127]
Spring Material : Beryllium Copper Alloy 172	Force @ Mid. Stroke : 60 g ± 20 g
Mid. Stroke : .0195" [0,5]	Initial Force (Pre-Load) : 15 g

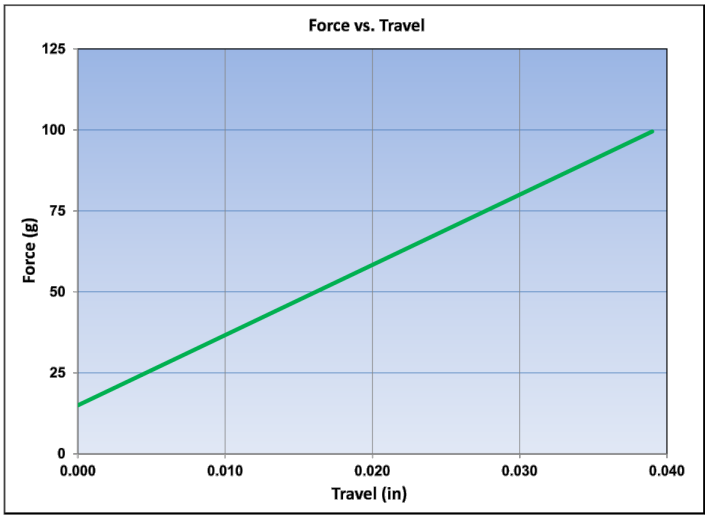

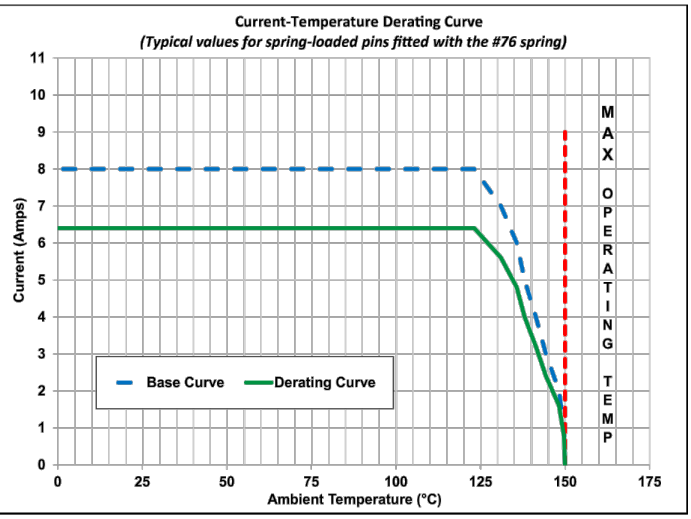

The stroke, force and current rating values are measured using spring pins with an internal construction per the design specification. Individual spring pin performance may vary from these values based on design differences.

Material	Beryllium Copper	**Grams Force**	60g
Max Stroke	.039" (0,991mm)	**Maximum Current**	8A @ 30˚ C Temp. Rise
Maximum Operating Temp @ Max Current	120.00˚ C	**20% De-rated Maximum Current**	6.40A
Contact Resistance	20.00mΩ Max		

ADDITIONAL NOTES AND SPECIFICATIONS

In the interest of improved design, quality and performance , Mill-Max reserves the right to make changes in its specifications without prior notice. Specifications and tolerances are provided wherever possible. The tolerance on dimensions of critical to function features is typically held tighter than the stated standard tolerances, such as press-fits, holes and lengths affecting the coplanarity of SMT products. Due to the wide variety of interconnects Mill-Max offers, the specific tolerances vary from product to product. If you need information regarding the tolerance of a particular part, please contact Technical Services.

RELATED LINKS AND DOCUMENTS

- Product Detail: 0906-0-15-20-76-14-11-0 - Spring-Loaded Pin with a Standard Tail
- Engineering Notebook: Introduction to Spring-Loaded Pogo Pins & Connectors
- Environmental Compliance: https://www.mill-max.com/rohs

Downloaded from Arrow.com.