TRACO POWER

AC/DC Power Supply

TMPW 10-T Series, 10 Watt

- **Compact chassis mount power module in 2.17" x 1.70" package**
- **Wide input voltage range 90-305 VAC**
- **Certified according to EN 60335-1 and IEC/EN/UL 62368-1**
- **I/O-Isolation 4'000 VAC**
- **Operating temperature range –40°C to +70°C**
- **No load input power <0.1W (acc. ErP directive)**
- **High efficiency up to 86%**
- **Internal EN 55032 class B filter**
- **Protection class II prepared**
- **3-year product warranty**

prepared

UL 62368-1 IEC 60335-1
IEC 62368-1

The TMPW 10-T is a 10 Watt AC/DC series with an extended input range of 90-305 VAC and is suitable for industrial and household/building technology applications and comes in a compact encapsulated plastic case. The 305 VAC (277 VAC ±10%) threshold is derived from a 480 VAC three-phase supply voltage often used in heavy industrial applications. Through the increased voltage level, the drawn current from the load is effectively reduced, which allows for an overall more compact and lightweight design approach. They offer an I/O-isolation voltage of 4000 VAC, a high temperature range of -40 to +70°C and are prepared for protection class II applications. Additionally, an internal EN 55032 class B filter saves valuable board space for an otherwise often mandatory external filter setup. An energy efficient design (<0.1 Watt standby power consumption) and safety approvals according to IEC/EN/UL 62368-1 and EN 60335-1 make this series suitable for a wide range of industrial and household/building technology applications.

Models

Order Code		Output Power	Output Voltage	Output Current	Efficiency
Screw terminals	JST connectors *	max.	nom.	max.	typ.
TMPW 10-105-T	TMPW 10-105-J	10 W	5 VDC	2'000 mA	81 %
TMPW 10-112-T	TMPW 10-112-J		12 VDC	833 mA	85 %
TMPW 10-115-T	TMPW 10-115-J		15 VDC	667 mA	86 %
TMPW 10-124-T	TMPW 10-124-J		24 VDC	417 mA	86 %

Options

TMPW-MK1	- Optional DIN-Rail Mounting Kit: www.tracopower.com/overview/tmpw-mk1

Note - * Technically identical series with JST connectors available. See: www.tracopower.com/overview/tmpw10-j

Downloaded from Arrow.com.

Input Specifications

Input Voltage	- AC Range	Operational Range:	90 - 305 VAC (Full Range)
		Rated Range:	100 - 277 VAC (Full Range)
	- DC Range	Operational Range:	100 - 430 VDC
		Certified Range:	100 - 250 VDC
		Polarity:	+DC: N / –DC: L
			(The rated range refers to 62368-1. For 60335-1 certification the rated input voltage is 100 - 240 VAC and DC input is not permitted.)
Input Frequency		Operational Range:	47 - 440 Hz
		Certified:	50/60 Hz
Power Consumption	- No load & Vin = 230 VAC		100 mW max. (Ready to meet ErP directive)
	- No load & Vin = 115 VAC		100 mW max.
Input Current	- Full load & Vin = 230 VAC		140 mA max.
	- Full load & Vin = 115 VAC		230 mA max.
Input Inrush Current	- At 230 VAC		60 A max.
	- At 115 VAC		30 A max.
Recommended Input Fuse			1'600 mA (slow blow)
			(The need of an external fuse has to be assessed in the final application.)

Output Specifications

Voltage Set Accuracy			±2% max.
Regulation	- Input Variation (Vmin - Vmax)		0.2% max.
	- Load Variation (0 - 100%)		1% max. (5 & 12 Vout models)
			0.5 % max. (other models)
Ripple and Noise (20 MHz Bandwidth)		5 VDC model:	60 mVp-p max. (w/ 0.1 µF || 47 µF)
		12 VDC model:	120 mVp-p max. (w/ 0.1 µF || 47 µF)
		15 VDC model:	150 mVp-p max. (w/ 0.1 µF || 47 µF)
		24 VDC model:	240 mVp-p max. (w/ 0.1 µF || 47 µF)
Capacitive Load		5 VDC model:	3'500 µF max.
		12 VDC model:	700 µF max.
		15 VDC model:	390 µF max.
		24 VDC model:	180 µF max.
Minimum Load			Not required
Temperature Coefficient			±0.02 %/K max.
Hold-up Time	- At 230 VAC		30 ms min.
Start-up Time	- At 230 VAC		60 ms max.
	- At 115 VAC		60 ms max.
Short Circuit Protection			Continuous, Automatic recovery
Output Current Limitation			140 - 235% of Iout max.
Overvoltage Protection			105 - 145% of Vout nom. (By Zener diode)
Transient Response	- Response Deviation		2% typ. / 3% max. (50% to 75% Load Step)
	- Response Time		500 µs max. (50% to 75% Load Step)

Safety Specifications

Standards	- IT / Multimedia Equipment	EN 62368-1
		IEC 62368-1
		UL 62368-1
	- Household	EN 60335-1
		IEC 60335-1
	- Power Transformers	IEC 61558-1
		IEC 61558-2-16
	- Certification Documents	www.tracopower.com/tmpw10-t-safety-cert

All specifications valid at 230 VAC, resistive full load and +25°C after warm-up time, unless otherwise stated.

Downloaded from Arrow.com.

Protection Class			Class I & II (Prepared): Reinforced Insulation
		See application note:	www.tracopower.com/info/protection-class.pdf
Pollution Degree			PD 2
Over Voltage Category			OVC II

EMC Specifications

EMI (Emissions)	- Conducted Emissions		EN 55032 class A (internal filter)
			EN 55032 class B (internal filter)
	- Radiated Emissions		EN 55032 class A (internal filter)
			EN 55032 class B (internal filter)
	- Harmonic Current Emissions		EN 61000-3-2, class A
	- Voltage Fluctuations & Flicker		EN 61000-3-3
EMS (Immunity)			EN 61000-6-2 (Generic Industrial)
			EN 55024 (IT Equipment)
			EN 55035 (Multimedia)
	- Electrostatic Discharge	Air:	EN 61000-4-2, ±8 kV, perf. criteria A
		Contact:	EN 61000-4-2, ±4 kV, perf. criteria A
	- RF Electromagnetic Field		EN 61000-4-3, 10 V/m, perf. criteria A
	- EFT (Burst) / Surge		EN 61000-4-4, ±2 kV, perf. criteria A
		L to L:	EN 61000-4-5, ±1 kV, perf. criteria A
	- Conducted RF Disturbances		EN 61000-4-6, 10 Vrms, perf. criteria A
	- PF Magnetic Field	Continuous:	EN 61000-4-8, 30 A/m, perf. criteria A
	- Voltage Dips & Interruptions	230 VAC / 50 Hz:	EN 61000-4-11
			30%, 25 periods, perf. criteria A
			60%, 10 periods, perf. criteria A
			>95%, 0.5 periods, perf. criteria A
			>95%, 250 periods, perf. criteria B
			100%, 0.5 periods, perf. criteria A
			100%, 1 period, perf. criteria A
			100%, 250 periods, perf. criteria B
		115 VAC / 60 Hz:	EN 61000-4-11
			30%, 25 periods, perf. criteria A
			60%, 10 periods, perf. criteria A
			>95%, 0.5 periods, perf. criteria A
			>95%, 250 periods, perf. criteria B
			100%, 0.5 periods, perf. criteria A
			100%, 1 period, perf. criteria A
			100%, 250 periods, perf. criteria B
EMC / Environmental	- Certification Documents		www.tracopower.com/tmpw10-t-emc-cert

General Specifications

Relative Humidity			95% max. (non condensing)
Temperature Ranges	- Operating Temperature		−40°C to +70°C
	- Storage Temperature		−40°C to +85°C
Power Derating	- High Temperature		2.5 %/K above 50°C
	- Low Input Voltage		2 %/V below 100 VAC
		See application note:	www.tracopower.com/tmpw10-t-cc
Cooling System			Natural convection (20 LFM)
Altitude During Operation			5'000 m max. (acc. IEC 62368-1)
			2'000 m max. (acc. IEC 60335-1)
Switching Frequency			35 - 75 kHz (PWM, PFM)
Insulation System			Reinforced Insulation
Working Voltage (rated)			254 VAC
Isolation Test Voltage	- Input to Output, 60 s		4'000 VAC
Leakage Current	- Touch Current		250 µA max.
Reliability	- Calculated MTBF		450'000 h (MIL-HDBK-217F, ground benign)

All specifications valid at 230 VAC, resistive full load and +25°C after warm-up time, unless otherwise stated.

Downloaded from Arrow.com.

Environment	- Vibration	IEC 60068-2-6 2 g, 3 axis, 60 min, 10-500 Hz, 10 min/cycle
	- Mechanical Shock	IEC 60068-2-27
Housing Material		Plastic resin (UL 94 V-0 rated)
Potting Material		Silicone (UL 94 V-0 rated)
Housing Type		Plastic Case
Mounting Type		Chassis Mount
Connection Type		Screw Terminal
Weight		65 g
Environmental Compliance	- REACH Declaration	www.tracopower.com/info/reach-declaration.pdf REACH SVHC list compliant REACH Annex XVII compliant
	- RoHS Declaration	www.tracopower.com/info/rohs-declaration.pdf Exemptions: 7(c)-I (RoHS exemptions refer to the component concentration only, not to the overall concentration in the product (O5A rule).)
	- SCIP Reference Number	54a808f0-d821-463a-a0a5-1a7297436bba

Additional Information

Supporting Documents	www.tracopower.com/overview/tmpw10-t
Frequently Asked Questions	www.tracopower.com/glossary-faq
Glossary	www.tracopower.com/info/glossary.pdf

Outline Dimensions

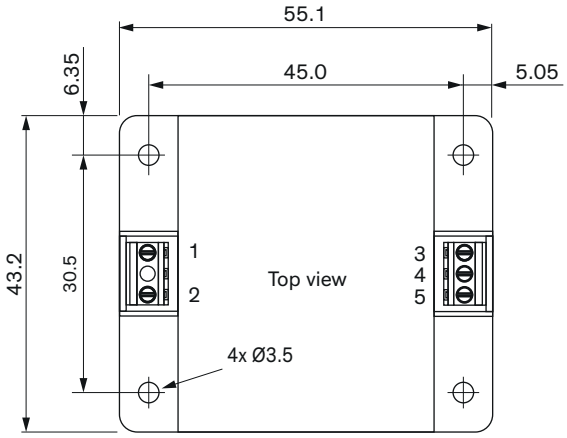

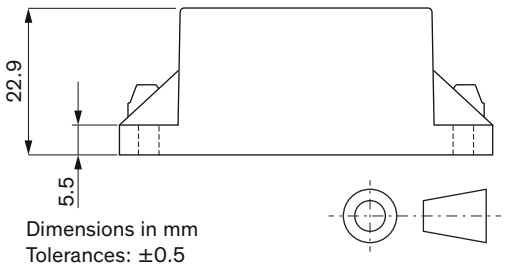

Dimensions in mm
Tolerances: ±0.5
Mounting screw locked torque: 0.29 Nm (3 kgfcm)

Pinout	
Pin	**Single**
1	AC IN (L)
2	AC IN (N)
3	–Vout
4	NC
5	+Vout

NC: Not connected

Connectors: EK381V-03P
Torque: 0.2 Nm (2 kgfcm)

© Copyright 2025 Traco Electronic AG

Downloaded from Arrow.com.