We connect and protect

19" Assembly Kit M6, Screw, Washer, Nut; 100 pieces

CATALOG NUMBER

21101-810

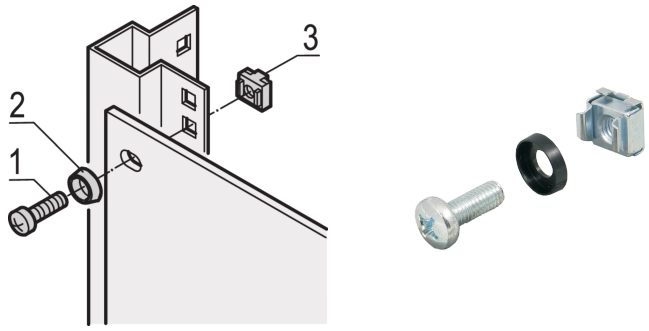

For standard grounding use a grounding nut and washer on at least one attachment point.

When 19" assembly kit is used with conductive 19" panel mount, grounding cage nuts are not needed.

CERTIFICATIONS

RoHS COMPLIANT

FEATURES

Assembly kits for assembly of 19" components into a cabinet

For mounting of front panels, distribution fields or other components on the frame, slide mounts or depth members with square cut-outs

PRODUCT ATTRIBUTES

Package Quantity: 100

Thread Size: M6

Finish: Zinc Plated

Material: Steel; ABS

Product Family: RatiopacPRO; RatiopacPRO AIR; CompacPRO; PropacPRO; Comptec; Inpac; MultipacPRO; Varistar CP; Novastar; Eurorack; Outdoor

Downloaded from Arrow.com.

Product Type: Assembly Kit
Type: Mounting Kit
Works With: 19" Cases; 19" Wallmount; 19" Indoor Cabinets; 19" Outdoor Cabinets
Net Weight: 1.076kg

WARNING

nVent products shall be installed and used only as indicated in nVent's product instruction sheets and training materials. Instruction sheets are available at www.nvent.com and from your nVent customer service representative. Improper installation, misuse, misapplication or other failure to completely follow nVent's instructions and warnings may cause product malfunction, property damage, serious bodily injury and death and/or void your warranty.

North America
All locations
+1.763.422.2661
Chat with us:
nvent.com/schroff

Europe
Straubenhardt, Germany
+49.7082.794.0
Betschdorf, France
+33.3.88.90.64.90
Warsaw, Poland
+48.22.209.98.35
Assago, Italy
+39.02.932.7141
Chat with us:
nvent.com/schroff

Asia
Shanghai, China
+86.21.2412.6943
Qingdao, China
+86.532.8771.6101
Singapore
+65.6768.5800
Shin-Yokohama, Japan
+81.45.476.0271
Chat with us:
nvent.com/schroff

Middle East & India
Dubai, United Arab Emirates
+971.4.378.1700
Bangalore, India
+91.80.6715.2001
Istanbul, Turkey
+90.216.250.7374
Chat with us:
nvent.com/schroff

Our powerful portfolio of brands:

CADDY ERICO HOFFMAN ILSCO SCHROFF TRACHTE

©2026 nVent. All nVent marks and logos are owned or licensed by nVent Services GmbH or its affiliates. All other trademarks are the property of their respective owners. nVent reserves the right to change specifications without notice.

This document is system-generated.

Downloaded from Arrow.com.