Part Number : 639115600
Product Description : T2 Terminator for Insulation OD 1.90-2.30mm - 24-18 AWG
Series Number : 207126
Status : Active
Product Category : Applicators and Crimp Modules

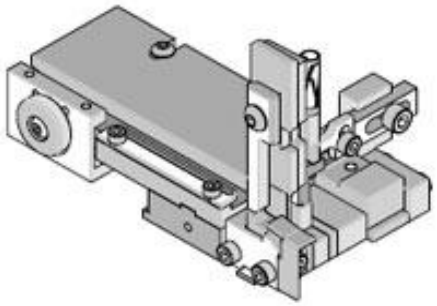

Documents and Resources

Tooling Specifications

ATS-639115600-001.pdf
TM-638000029-001.pdf
TM-638000029DE-001.pdf
TM-638000029SP-001.pdf
TM-638000029FR-001.pdf
TM-638000029IT-001.pdf
TM-638000029JP-001.pdf
TM-638000029KR-001.pdf
TM-638000029MY-001.pdf
TM-638000029PL-001.pdf
TM-638000029RU-001.pdf
TM-638000029SK-001.pdf
TM-638000029TH-001.pdf
TM-638000029VN-001.pdf
TM-638000029CN-001.pdf
TM-638000029TW-001.pdf
TM-638500090-001.pdf
TM-638500090SP-001.pdf

Product Environment Compliance

Compliance

GADSL/IMDS	Not Relevant
China RoHS	Not Relevant
EU ELV	Not Relevant

Downloaded from Arrow.com.

Low-Halogen Status	Not Relevant
REACH SVHC	Not Reviewed per D(2025)7771-DC (04 Feb 2026)
EU RoHS	Not Reviewed per EU 2015/863

Compliance Statements

- EU RoHS
- REACH SVHC
- Low-Halogen

Industry Documents

- IPC 1752A Class C
- IPC 1752A Class D
- Molex Product Compliance Declaration
- IEC-62474
- chemSHERPA (xml)

Substances of Interest

- PFAS

EU RoHS Certificate of Compliance

Additional Product Compliance Information

Part Details

General

Status	Active
Category	Applicators and Crimp Modules
Series	207126
Description	T2 Terminator for Insulation OD 1.90-2.30mm - 24-18 AWG
Comments	See Tooling Specification (PDF) Above
Function	Crimp
Geographic Area	Global
Level of Automation	Automatic, Semi-Automatic
More Detailed Tech Information	toolingsupport@molex.com
Product Name	T2
Tool Type	Terminator Die
UPC	884982666504
Warranty Disclaimer	CAUTION: Molex tooling crimp specifications are valid only when

Downloaded from Arrow.com.

	used with Molex terminals and tooling manufactured by Molex and sold by Molex or authorized distributors ("Molex Tooling"). When using tooling other than Molex Tooling with Molex specific connector systems listed in our ATS documents, the Molex tooling qualification does not apply and the responsibility for full qualification of the connector system is that of the customer. Molex accepts no liability for connector performance or tooling support where tooling other than Molex Tooling is used or where Molex Tooling is modified.

Physical

Net Weight	1.000/g

Mates With / Use With

Use with Part(s)

Description	Part Number
3BF Base Unit	11193001

Applicable Parts

Description	Part Number
Mini-Fit Female Crimp Terminal, Tin (Sn) over Copper (Cu) Plated Brass, Double 22+22 or Single 24-18 AWG, Reel	39000038
Mini-Fit Male Crimp Terminal, Matte Tin (Sn) Plated Brass, Double 22+22 or Single 24-18 AWG, Reel	39000040
Mini-Fit Female Crimp Terminal, Tin (Sn) over Phosphor Bronze, Double 22+22 or Single 24-18	39000059

Downloaded from Arrow.com.

AWG, Reel	
Mini-Fit Male Crimp Terminal, Matte Tin (Sn) Plated Phosphor Bronze, Double 22+22 or Single 24-18 AWG, Reel	39000061
Mini-Fit Female Crimp Terminal, Selective Gold (Au) and Selective Tin (Sn) over Nickel (Ni), 24-18 AWG, Reel	39000073
Mini-Fit Male Crimp Terminal, 0.38µm Selective Gold (Au) Plated Brass, Lead-Free, 24-18 AWG, Reel	39000075
Mini-Fit Male Crimp Terminal, Tin (Sn) Plated Brass, 24-18 AWG, Reel	39000120
Mini-Fit Male Crimp Terminal, Tin (Sn) Plated Brass, 24-18 AWG, Bag	39000121
Mini-Fit Male Crimp Terminal, Tin (Sn) Plated Phosphor Bronze, 24-18 AWG, Reel	39000126
Mini-Fit Female Crimp Terminal, Selective Gold (Au) over Phosphor Bronze, 24-18 AWG, Reel	39000181
Mini-Fit Female Crimp Terminal, Tin (Sn) over Nickel (Ni), 24-18 AWG, Reel	39000207
Mini-Fit Female Crimp Terminal, Tin (Sn) over Phosphor Bronze, 24-18 AWG, Reel	39000213
Mini-Fit Male Crimp Terminal, 0.76µm Selective Gold (Au) Plated Phosphor Bronze, 24-18 AWG, Reel	39000219
Mini-Fit Female Crimp Terminal, Selective Gold (Au) and Selective Tin (Sn) over Nickel (Ni), 24-18 AWG, Reel	39000428
Mini-Fit Male Crimp Terminal, 0.76µm Selective Gold (Au) Plated Brass, Lead-Free, 24-18 AWG, Reel	39000430

Downloaded from Arrow.com.

Mini-Fit Female Crimp Terminal, Selective Gold (Au) and Selective Tin (Sn) over Nickel (Ni), 24-18 AWG, Reel	40130851
Mini-Fit Jr. Crimp Grounding Terminal, 24-18 AWG, Reel, Phosphor Bronze, Tin or Select Gold (Au)	304901002
Mini-Fit Jr. Crimp Grounding Terminal, Male, with Tin (Sn) Plated Phosphor Bronze Contact, 24-18 AWG, Reel	304902002
Mini-Fit HCS Crimp Terminal, 20-18 AWG, Reel, Copper (Cu) Alloy, Tin (Sn)	444761111
Mini-Fit HCS Crimp Terminal, 20-18 AWG, Reel, Copper (Cu) Alloy, Tin (Sn)	444781111
Mini-Fit HCS Crimp Terminal, 20-18 AWG, Reel, Copper (Cu) Alloy, Gold (Au) Selective	444781211
Mini-Fit Jr. Plus Crimp Terminal, 24-18 AWG, Reel, Phosphor Bronze, Select Gold (Au)	444851211
Mini-Fit Plus Female Crimp Terminal, 20-18 AWG, Copper Alloy, Tin (Sn) Plating, Reel	457501111
Mini-Fit Plus Female Crimp Terminal, 20-18 AWG, Copper Alloy, 0.76µm Gold (Au) Selective Plating, Reel	457501211
Mini-Fit Plus Crimp Terminal, 20-18 AWG, Reel, Tin (Sn) Plating	460121141
Mini-Fit Plus Crimp Terminal, 20-18 AWG, Reel, 0.76µm Selective Gold (Au) Plating	460121241
Mini-Fit Plus High Mating Cycle Female Crimp Terminal, 20-18 AWG, Reel, Select Gold (Au) Plating with Proprietary Molex Advanced Contact Surface Finish (CSF) in Contact Area	460181541

Downloaded from Arrow.com.

Mini-Fit HCS Crimp Terminal, 20-18 AWG, Reel, Copper (Cu) Alloy, .76µm Tin (Sn)	444761211

This document was generated on Sep 25, 2026

Downloaded from Arrow.com.