320W AC/DC High Reliable Multi-Industries Enclosed Type Power Supply **NSP-320 series**

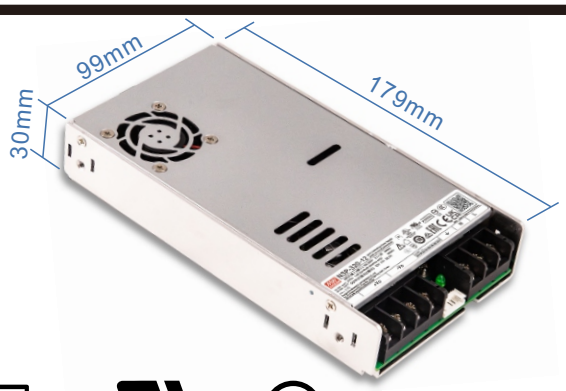

User's Manual
Click Me

IEC62368-1
IEC61558-1/-2-16
IEC61010-1/-2-201
IEC60601-1
IEC60335-1
IEC62477-1

BS EN/EN62368-1
BS EN/EN61558-1/-2-16
BS EN/EN61010-1/-2-201
BS EN/EN60601-1
BS EN/EN60335-1
BS EN/EN62477-1

UL62368-1
ANSI/AAMI ES60601-1

LISTED
UL61010-1

(Note.5) GB4943.1 CNS15598-1 KC62368-1 (By request) IS 13252 (By request Note.7) TPTC004

ECO Automate Industrial Security Network Telecom Household Medical 2xMOPP BF rated

Features

- 85~305Vac input with PFC(277Vac available)
- No load power consumption <0.3W~0.5W by R.C.
- Global certificates in multi-fields (ITE 62368-1, Medical 60601-1,Household 60335-1, Industrial 61558-1/2-16/61010-1, Energy converter 62477-1)
- 200% peak power capability(12~60V models)
- High efficiency up to 93.5%
- -40~85℃ wide range operation temperature(> +60℃ derating)
- Extremely low leakage current<350μA, 2 x MOPP, suitable for BF medical applications
- Built-in constant current limiting circuit
- Protections: Short circuit / Overload / Over voltage / Over temperature
- Forced air cooling by built-in DC fan with noise <40dB and fan ON/OFF control
- Built-in remote ON/OFF control/Remote Sense/ DC OK signal
- Over voltage category Ⅲ (OVC Ⅲ)
- Operating altitude up to 5000 meters
- Conformal coating
- 5 years warranty

Applications

- Industrial automation machinery/ control system
- Security system
- Mechanical and electrical equipment
- Electronic instruments, equipments orapparatus
- Network equipment
- Telecom devices
- Power sourcing equipment of PoE
- Home automation
- Medical devices
- Charging application

GTIN CODE

MW Search: https://www.meanwell.com/serviceGTIN.aspx

Description

The NSP-320 series is a 320W AC/DC power supply with PFC function, designed for high reliability and suitable for multiple industries. Key features include: compact size (179*99*30 mm) for better space utilization in system installations, ultra-wide input range of 85~305Vac for global compatibility, up to 93.5% efficiency and low standby power consumption (<0.3W~0.5W by models) for energy-saving and carbon reduction, constant current design with 200% peak power capability, wide operating temperature range from -40 to +85°C(+60°C at full load), compliance with OVC III, built-in Remote Control /Remote Sense/DC OK signal, internal PCB coating, complete protections, certifications for multiple safety standards including 62368-1, 60601-1, 61558-1, 60335-1, 62477-1, and 61010-1, as well as 2 X MOPP compliance and extremely low leakage current (<350μA). It is suitable for BF-rated medical equipment and comes with a 5-years warranty, making it a highly cost-effective solution for industrial power supply needs.

Model Encoding

NSP -320- 24

- 24 → Output voltage (5V/7.5V/12V/15V/24V/27V/36V/48V/60V)
- 320 → Output wattage
- NSP → Series name

Downloaded from Arrow.com.

320W AC/DC High Reliable Multi-Industries Enclosed Type Power Supply **NSP-320 series**

SPECIFICATION	NSP-320-5	NSP-320-7.5	NSP-320-12	NSP-320-15	NSP-320-24	NSP-320-27	NSP-320-36	NSP-320-48	NSP-320-60
OUTPUT									
DC VOLTAGE	5V	7.5V	12V	15V	24V	27V	36V	48V	60V
RATED CURRENT	60A	40A	26.7A	21.4A	13.4A	11.9A	8.9A	6.7A	5.4A
CURRENT RANGE	0 ~ 60A	0 ~ 40A	0 ~ 26.7A	0 ~ 21.4A	0 ~ 13.4A	0 ~ 11.9A	0 ~ 8.9A	0 ~ 6.7A	0 ~ 5.4A
RATED POWER	300W	300W	320.4W	321W	321.6W	321.3W	320.4W	321.6W	324W
PEAK CURRENT(5 sec.)	N/A	N/A	53.4A	42.7A	26.7A	23.7A	17.8A	13.4A	10.7A
PEAK POWER(5 sec.)	N/A	N/A	640W	640W	640W	640W	640W	640W	640W
RIPPLE & NOISE (max.) Note.2	200mVp-p	200mVp-p	200mVp-p	200mVp-p	240mVp-p	240mVp-p	240mVp-p	240mVp-p	300mVp-p
VOLTAGE ADJ. RANGE	4.7 ~ 5.5V	6.8 ~ 9V	10.8 ~ 14V	15 ~ 19V	21 ~ 26V	26 ~ 32V	32 ~ 43V	44 ~ 57V	54 ~ 72V
VOLTAGE TOLERANCE Note.3	±2.0%	±2.0%	±2.0%	±2.0%	±1.0%	±1.0%	±1.0%	±1.0%	±1.0%
LINE REGULATION	±0.5%	±0.5%	±0.5%	±0.5%	±0.5%	±0.5%	±0.5%	±0.5%	±0.5%
LOAD REGULATION	±1.0%	±1.0%	±0.5%	±0.5%	±0.5%	±0.5%	±0.5%	±0.5%	±0.5%
SETUP, RISE TIME	1500ms, 80ms/115Vac 1000ms, 80ms/230Vac 1000ms, 80ms/277Vac								
HOLD UP TIME (Typ.)	16ms at full load								
INPUT									
VOLTAGE RANGE Note.4	85 ~ 305Vac 120 ~ 431Vdc								
NO LOAD POWER CONSUMPTION(Typ.) Remote Power OFF	0.3W/115Vac 0.5W/230Vac 0.5W/277Vac								
NO LOAD POWER CONSUMPTION(Typ.) Remote Power ON	3W/115Vac 3W/230Vac 3W/277Vac								
FREQUENCY RANGE	47 ~ 63Hz								
POWER FACTOR (Typ.)	PF>0.98/115Vac, PF>0.93/230Vac, PF>0.9/277Vac at full load								
EFFICIENCY (Typ.)	91%	91%	93.5%	93.5%	93.5%	93.5%	93.5%	93.5%	93.5%
AC CURRENT (Typ.)	3.2A/115Vac 1.6A/230Vac 1.4A/277Vac								
INRUSH CURRENT (Typ.)	COLD START 20A/115Vac 40A/230Vac 50A/277Vac								
LEAKAGE CURRENT	Earth leakage current <350μA(rms)@277Vac, touch current<100μA(rms) @ 277Vac								
PROTECTION									
SHORT CIRCUIT	5V	Hiccup mode,recovers automatically after fault condition is removed							
	7.5V ~ 60V	Constant current limiting for more than 5 seconds (Vout<30%) and then shut down o/p voltage, AC re-power on to recover							
OVERLOAD	5V	105%~170% rated output power; Hiccup mode,recovers automatically after fault condition is removed							
	7.5V	105%~150% rated output power; Constant current limiting for more than 5 seconds and then shut down o/p voltage, AC re-power on to recover							
	12V ~ 60V	Normally works within 105 ~ 200% rated output power for more than 5 seconds and then constant current limiting without shutdown(Vout>30%), recovers automatically after fault condition is removed, or shut down o/p voltage when Vout<30%,AC re-power on to recover							
		>200% rated power, constant current limiting (Vout>30%)with auto-recovery after fault condition is removed, or shut down o/p voltage when Vout<30%,AC re-power on to recover							
OVER VOLTAGE	5.8 ~ 7.5V	9.2 ~ 13V	15 ~ 19V	20 ~ 25V	28 ~ 36V	33~ 42V	44 ~ 54V	58~ 70V	73~ 86V
	Protection type : Shut down o/p voltage, AC re-power on to recover								
OVER TEMPERATURE	Shut down o/p voltage, AC re-power on to recover								
FUNCTION									
REMOTE CONTROL	POWER ON: RC+~RC- 0~0.8Vdc or open POWER OFF: RC+~RC- 3.3~10Vdc by external voltage								
REMOTE SENSE	Compensate voltage drop on the load wiring up to 0.3V. Please refer to the Function Manual								
DC OK SIGNAL	By phototransistor, contact rating(max.):15Vdc/10mA resistive load. Please refer to the Function Manual.								
FAN NOISE(Typ.)	Fan ON/OFF control, RTH3≥50℃ ±10℃ FAN ON ; RTH3≤40℃ ±10℃ FAN OFF								
	40dB								
ENVIRONMENT									
WORKING TEMP.	-40 ~ +85℃ (Refer to "Derating Curve")								
WORKING HUMIDITY	20 ~ 90% RH non-condensing								
STORAGE TEMP., HUMIDITY	-40 ~ +85℃, 10 ~ 95% RH non-condensing								
TEMP. COEFFICIENT	±0.05%/℃ (0 ~ 60℃)								
VIBRATION	10 ~ 500Hz, 2G 10min./1cycle, 60min. each along X, Y, Z axes								

Downloaded from Arrow.com.

SAFETY & EMC (Note.5&6&7)			
SAFETY STANDARDS	CB DEKRA UL CCC BSMI EAC SEMI F47 KC/BIS	IEC62368-1, IEC60335-1, IEC61558-1/-2-16, IEC61010-1/-2-201, IEC60601-1; IEC62477-1 BS EN/EN62368-1, BS EN/EN60335-1, BS EN/EN61558-1/-2-16, BS EN/EN61010-1/-2-201, BS EN/EN60601-1(3.2 Version);BS EN/EN62477-1 UL62368-1, ANSI/AAMI ES60601-1(3.2 Version),UL61010-1/-2-201 GB4943.1 CNS15598-1 TP TC 004 approved; KC62368-1 and BIS IS 13252 (Part 1) certified, No stock ,contact sales by request	
ISOLATION LEVEL(Note.8)	Primary-Secondary: 2xMOPP, Primary-Earth: 1xMOPP, Secondary-Earth: 1xMOPP		
OVER VOLTAGE CATEGORY (Note.9)	IEC/EN 61558-1/-2-16 IEC/EN/UL 62368-1 IEC/EN 60335-1 IEC/EN/ANSI/AAMI ES60601-1 IEC/EN/UL 61010-1/-2-201 IEC/EN 62477-1	(OVC Ⅲ, altitude up to 2000M) (OVC Ⅱ, altitude up to 5000M) (OVC Ⅱ, altitude up to 5000M) (OVC Ⅱ, altitude up to 4000M) (OVC Ⅱ, altitude up to 5000M) (OVC Ⅱ, altitude up to 5000M)	
SAFETY EXTRA-LOW VOLTAGE(SELV)	IEC/EN 61558-2-16 (SELV, 5 ~ 36V) IEC/EN 60335-1 (SELV, 5 ~ 36V) IEC/EN/UL 62368-1 (SELV/ES1, 5 ~ 36V)		
WITHSTAND VOLTAGE	I/P-O/P:4.2KVac I/P-FG:2.1KVac O/P-FG:1.5KVac		
ISOLATION RESISTANCE	I/P-O/P, I/P-FG, O/P-FG:100M Ohms / 500VDC / 25℃/ 70% RH		
EMC EMISSION	**Parameter**	**Standard**	**Test Level / Note**
	Conducted	BS EN/EN55032(CISPR32),CNS 15936, GB/T 9254.1,KS C 9832	Class B
		BS EN/EN55014-1(CISPR14-1)	
		BS EN/EN55011(CISPR11)	Class B
	Radiated	BS EN/EN55032(CISPR32),CNS 15936, GB/T 9254.1,KS C 9832	Class B
		BS EN/EN55014-1(CISPR14-1)	
		BS EN/EN55011(CISPR11)	Class B
	Harmonic Current	BS EN/EN61000-3-2(IEC61000-3-2), GB 17625.1	Class A
	Voltage Flicker	BS EN/EN61000-3-3(IEC61000-3-3)	-----
EMC IMMUNITY	BS EN/EN55035(CISPR35),BS EN/EN61000-6-2(IEC61000-6-2),BS EN/EN60601-1-2(IEC60601-1-2), BS EN/EN55014-2(CISPR14-2),KS C 9835,SEMI F47 tested at 200Vac		
	Parameter	**Standard**	**Test Level / Note**
	ESD	BS EN/EN61000-4-2	Level 4, 15KV air ; Level 4, 8KV contact
	Radiated	BS EN/EN61000-4-3	Level 3, 10V/m(80MHz~2.7GHz) Table 9, 9~28V/m(385MHz~5.78GHz)
	EFT / Burst	BS EN/EN61000-4-4	Level 3, 2KV
	Surge	BS EN/EN61000-4-5	Level 4, 2KV/Line-Line 4KV/Line-Earth
	Conducted	BS EN/EN61000-4-6	Level 3, 10V
	Magnetic Field	BS EN/EN61000-4-8	Level 4, 30A/m
	Voltage Dips and Interruptions	BS EN/EN61000-4-11	>95% dip 0.5 periods, 30% dip 25 periods, >95% interruptions 250 periods
OTHERS			
MTBF	1699.1K hrs min. Telcordia SR-332 (Bellcore) ; 257.1K hrs min. MIL-HDBK-217F (25℃)		
DIMENSION (L*W*H)	**179*99*30mm**		
PACKING	0.67Kg; 18pcs/12.5Kg/0.65CUFT		

NOTE

1. All parameters NOT specially mentioned are measured at 230Vac input, rated load and 25℃ of ambient temperature.
2. Ripple & noise are measured at 20MHz of bandwidth by using a 12" twisted pair-wire terminated with a 0.1uF & 47uF parallel capacitor.
3. Tolerance: includes set up tolerance, line regulation and load regulation.
4. Derating may be need under low input voltages. Please refer to "STATIC CHARACTERISTIC" sections for details.
5. The Regulatory Compliance Mark (RCM) is applied on a voluntary basis. The equipment meets the relevant IEC or AS/NZS standards, or AS/NZS 3820 where applicable. The use of the RCM mark complies with AS/NZS 4417.1.
6. The power supply is considered a component which will be installed into a final equipment. All the EMC tests are been executed by mounting the unit on a 360mm*360mm metal plate with 1mm of thickness. The final equipment must be re-confirmed that it still meets EMC directives. For guidance on how to perform these EMC tests, please refer to "EMI testing of component power supplies." (as available on https://www.meanwell.com//Upload/PDF/EMI_statement_en.pdf)
7. Some factory or model may not have the BIS logo, please contact your MEAN WELL sales for more information.
8. MOPP is suitable for 100-240Vac input only
9. The ambient temperature derating of 3.5℃/1000m with fanless models and 5℃/1000m with fan models for operating altitude higher than 2000m(6500ft).

※ Product Liability Disclaimer: For detailed information, please refer to https://www.meanwell.com/serviceDisclaimer.aspx

Downloaded from Arrow.com.

■ Block Diagram

PFC fosc : 65KHz
PWM fosc : 80KHz

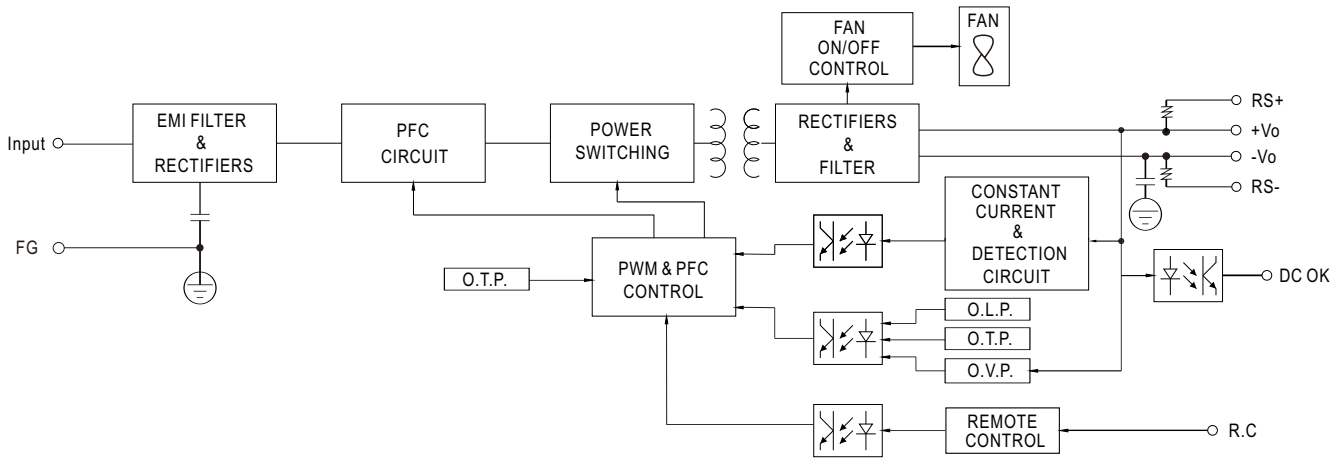

■ Derating Curve

Suitable for 100/110/115/120Vac System
(85~135Vac)

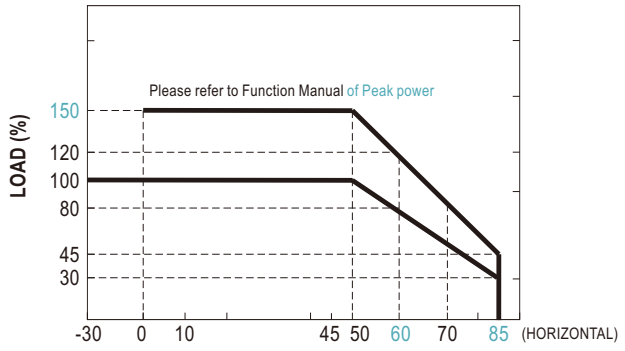

AMBIENT TEMPERATURE (℃)

Note: Below 100Vac @-30℃ there may be a restart situation within 3 seconds after power-on

Suitable for 220/230/240/277Vac System
(180~305Vac)

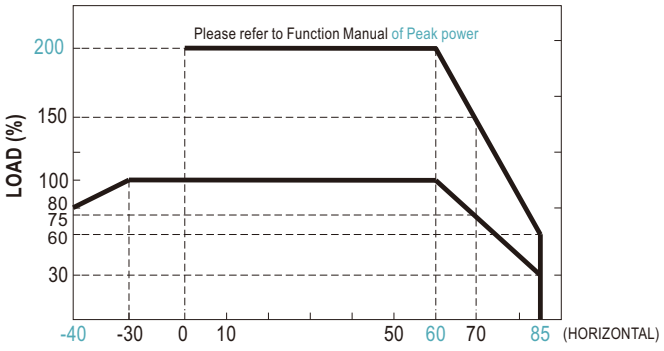

AMBIENT TEMPERATURE (℃)

■ Output Derating vs Input Voltage

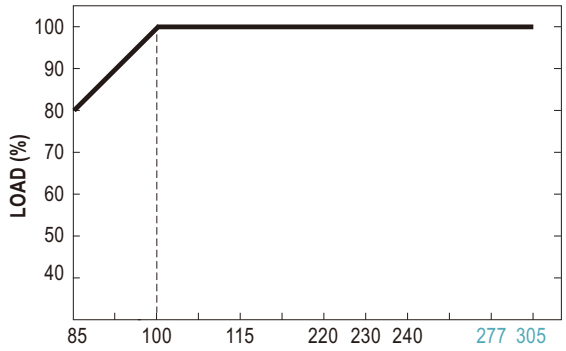

INPUT VOLTAGE (Vac) 60Hz

Downloaded from Arrow.com.

■ Function Manual

1. Peak Power

$$P_{av} = \frac{P_{pk} \times t + P_{npk} \times (T-t)}{T} \leqslant P_{rated}$$

$$Duty = \frac{t}{T} \times 100\% \leqslant 35\%$$

$t \leqslant 5$ sec

P_{av} : Average output power (W)

P_{pk} : Peak output power (W)

P_{npk} : Non-peak output power (W)

P_{rated} : Rated output power (W)

t : Peak power width (sec)

T : Period (sec)

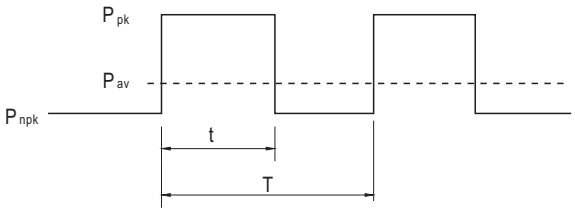

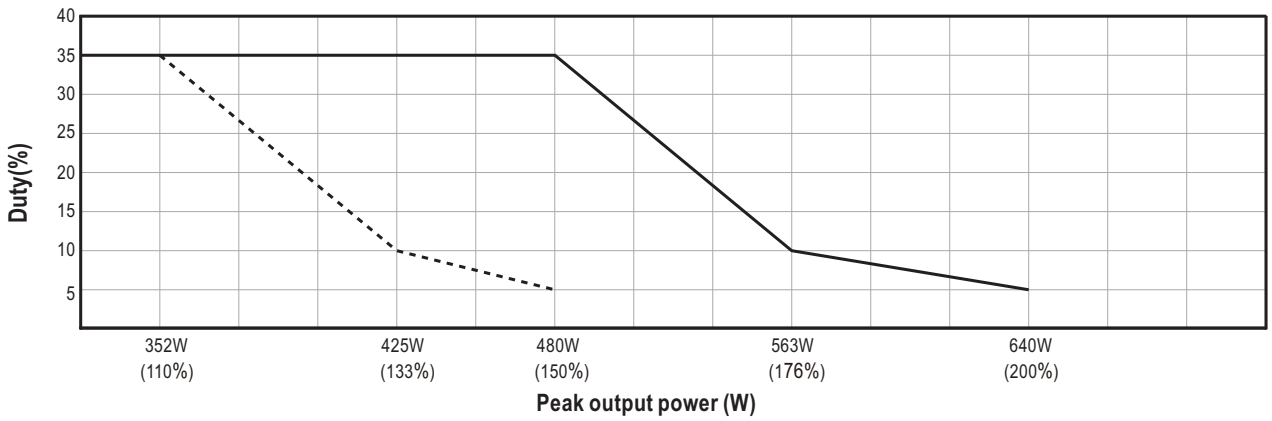

For example (24V model) :

Vin = 200Vac Duty_max = 5%

$P_{av} = P_{rated} = 320W$

$P_{pk} = 640W$

$t \leqslant 5$ sec

$$T \geqq \frac{5\ sec}{5\%} \geqq 100sec$$

$$P_{npk} \leqslant \frac{T P_{av} - t P_{pk}}{T-t}$$

$P_{npk} \leqslant 303W$

Note: When the output voltage is adjusted to the upper limit, the peak power is 150% rated power.

Downloaded from Arrow.com.

2.Remote Control

The PSU can be turned ON/OFF by using the "Remote Control" function with external switch and auxiliary power

PSU Vo Status	Between RC-(pin5) and RC+(pin6) on CN1
POWER ON	Keep 0~0.8Vdc or open
POWER OFF	Keep 3.3~10Vdc by external voltage

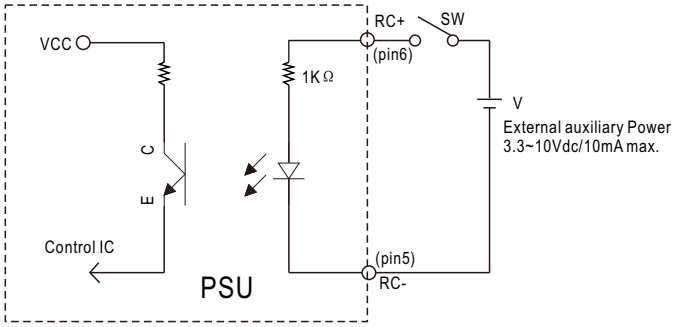

3.Remote Sense

The remote sensing compensates voltage drop on the load wiring up to 0.3Vdc

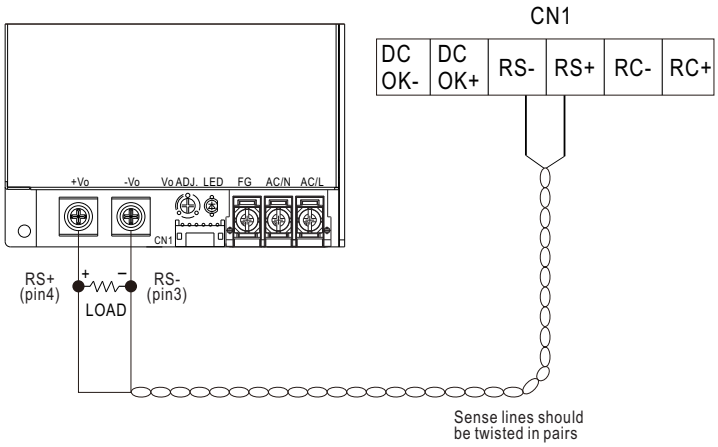

4.DC_OK signal

※ DC_OK is a collector shorted signal. It is used by an optocoupler in the power supply which indicates the output status of the power supply as exhibited below.

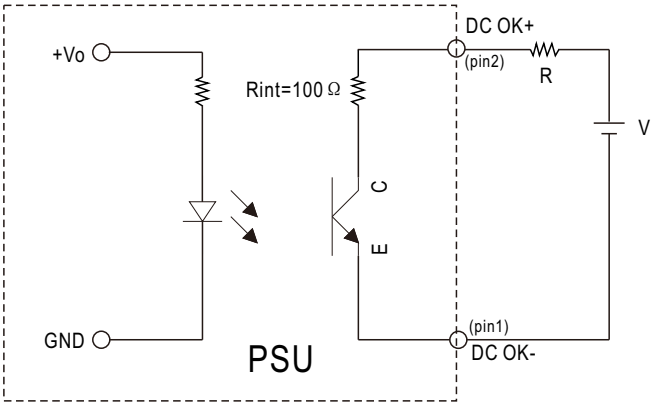

External voltage soure(V) and resistor(R)

PSU Vo Status	Photo transistor
POWER ON	Conduct(Low impedance)
POWER OFF	Open(High impedance)

Optocoupler Rating(max.) 15Vdc/10mA resistive load

Downloaded from Arrow.com.

■ Mechanical Specification

Case No.309A Unit:mm Tolerance:±1

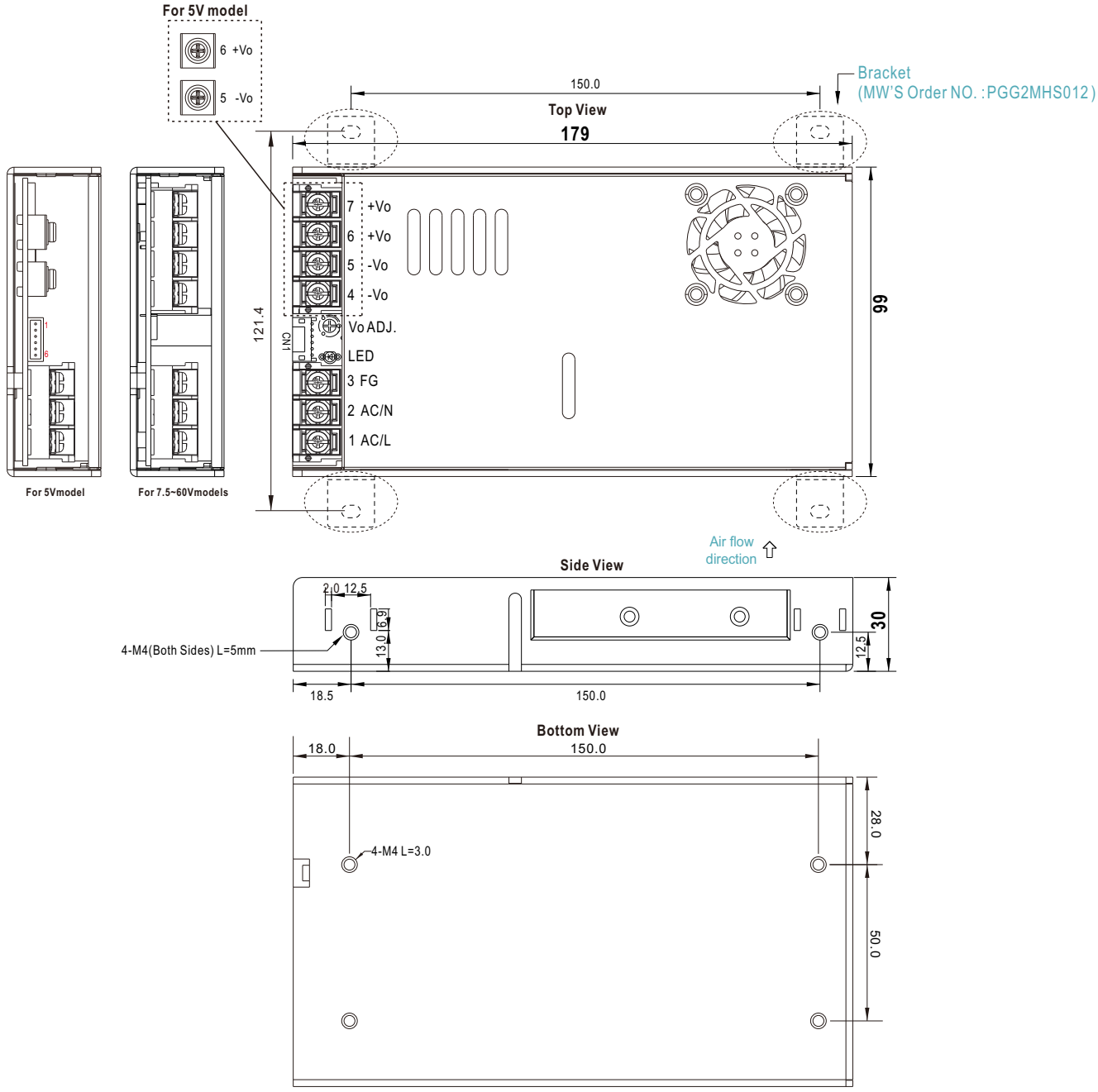

※ Input Terminal Pin No. Assignment

Pin No.	Assignment		Screw thread	Mounting torque
1	AC/L or DC input +Vin	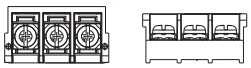	M3.5	8~10Kgf.cm
2	AC/N or DC input -Vin			
3	FG ⏚			

※ DC Output Terminal Pin No. Assignment

Pin No.	Assignment	Diagram	Screw thread	Mounting torque
5	-Vo	For 5V models	M4	10~12Kgf.cm
6	+Vo			
4,5	-Vo	For 7.5~60V models 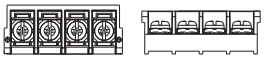	M3.5	8~10Kgf.cm
6,7	+Vo			

Downloaded from Arrow.com.

Connector Pin No. Assignment (CN1): DJS-1125R-06 or equivalent

Pin No.	Assignment	Mating Housing	Terminal
1	DC OK-	JS-1124-06 or equivalent	JS-1124-T or equivalent
2	DC OK+		
3	RS-		
4	RS+		
5	RC-		
6	RC+		

■ Accessory List

No.	Item		Quantity
1	Control function interface(CN1) mating wire along with NSP-320 (standard accessory)	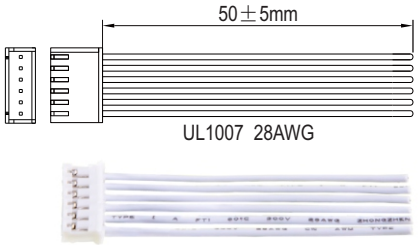	1pcs/per model
2	Bracket MW'S Order NO. :PGG2MHS012 (Optional accessories can be purchased separately)	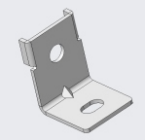	4pcs/per model (Please refer to Installation Diagram)
3	Terminal cover MW'S Order NO. : PEE4TBC-03, PEE4TBC-04 (Optional accessories can be purchased separately)	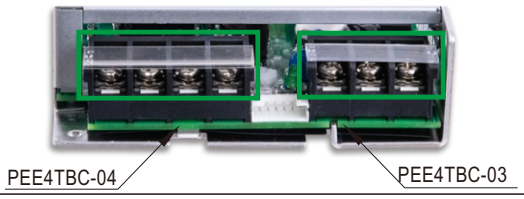	1pcs/per model

■ Installation Diagram

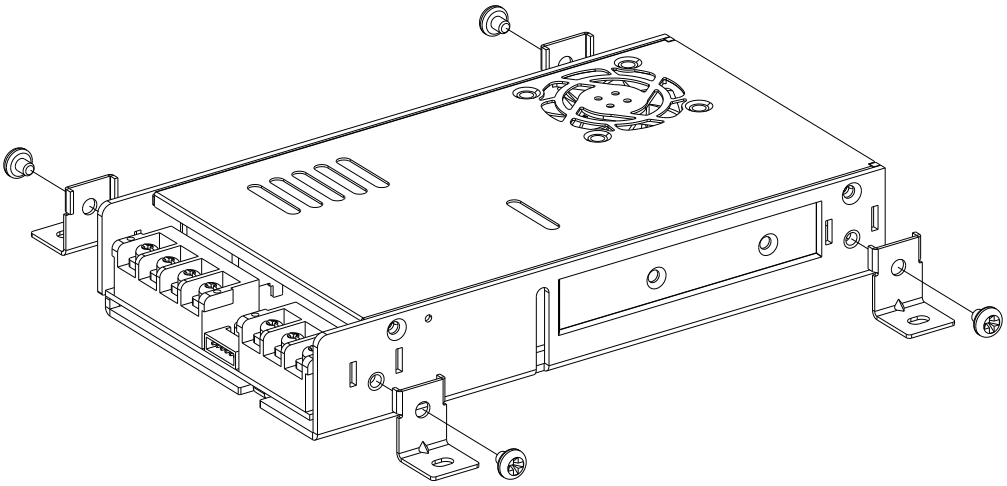

■ Installation Manual

Please refer to : http://www.meanwell.com/manual.html

Downloaded from Arrow.com.