NOTES:

1. MATERIALS AND FINISHES:
   BODY, SHELL, WASHER, BRAID CLAMP
   AND CLAMPS & CLAMP NUT- BRASS, SILVER PLATING
   CONTACT - BeCu, GOLD PLATING
   OUTER CONTACT - BRASS, GOLD PLATING
   RETAINING RING - BRASS, NICKEL PLATING
   SPRING - BeCu, NICKEL PLATING
   GASKETS - SILICONE RUBBER, RED
   INSULATORS - PTFE, NATURAL

2. MECHANICAL:
   A. TEMPERATURE RANGE: -65°C TO +165°C

3. PACKAGING:
   A. QUANTITY: SINGLE PACK
   B. MARKING: PACKGING TO BE MARKED
      "AMPHENOL RF, 31-2675-1 AND DATE CODE"

4. CABLE ASSEMBLY INSTRUCTIONS:
   A. SEE SPEC.9-9950-174

5 SHOWS CABLE ENTRY DIMENSIONS.

REVISIONS				
REV	DESCRIPTION	DATE	ECN	APPR
A	RELEASE TO MFG.	--	--	--
N	ON DASH 3-3521-218 WAS 3-2818-33	--	37167	A.A/DR
P	REDRAWN IN CREO, METRIC UNITS & COD SHEET ADDED, 31-10720 NA PLATING WAS SA, FORMAT & NOTES UPDATED	09-09-2020	15318	VR
R	SEE SHEET 1	06/03/2021	15822	ED

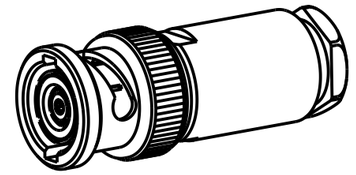

SCALE 1.500

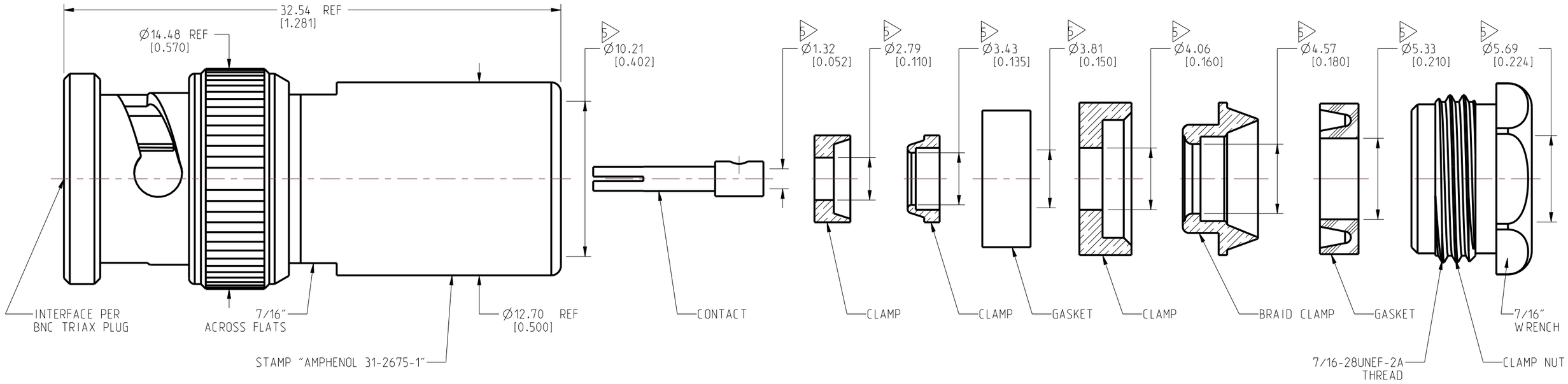

CUSTOMER OUTLINE DRAWING

ALL OTHER SHEETS ARE FOR INTERNAL USE ONLY

NOTICE: These drawings, specifications, or other data (1) are, and remain the property of Amphenol corp. (2) must be returned upon request; and (3) are confidential and not to be disclosed to any person other than those to whom they are given by Amphenol Corp. The furnishing of these drawings, specifications, or other data by Amphenol Corp., or to any other person to anyone for any purpose is not to be regarded by implication or otherwise in any manner licensing, granting rights to permitting such holder or any other person to manufacture, use or sell any product, process or design, patented or otherwise, that may in any way be related to or disclosed by said drawings, specifications, or other data.

THIRD ANGLE PROJ.

REFERENCE	EAR#

UNLESS OTHERWISE SPECIFIED
DIMENSIONS ARE METRIC [INCHES] AND TOLERANCES ARE:

<0.5mm = ±0.05mm	[<0.020 = ±0.002]
>0.5 - 6mm = ±0.1mm	[>0.020 - 0.236 = ±0.004]
>6.00 - 30mm = ±0.2mm	[>0.236 - 1.181 = ±0.008]
>30.00 - 120mm = ±0.3mm	[>1.181 - 4.725 = ±0.012]

ANGLES = ±1°

MATERIAL: SEE NOTES

ENGR.1	ENGR.2	DATE
O.BARTHELMES		21-MAY-20

TITLE: BNC STR TRIAX PLUG FOR TRIAX CABLE POLARIZED CLAMP TYPE

SHEET NO. 2 OF 2 | SCALE: 4.0:1.0

Amphenol RF

SIZE	DRAWING NO.	REV
B	31-2675-1	R
	ITEM NO. 31-2675-1	
	PART NO. 31-2675-1	

Downloaded from Arrow.com.