POWER | PROTECT | CONNECT

SERIES: F2D2-2016 | DESCRIPTION: HIGH CURRENT POWER INDUCTORS

FEATURES

- Ferrite core
- Moisture Sensitivity: Level (MSL) 1
- High inductance, high current, low magnetic loss, low ESR, small parasitic capacitance
- Operating temperature -40°C to 125°C

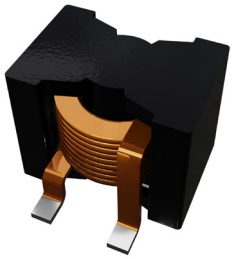

signal TRANSFORMER a bel group

MODEL

MODEL	Inductance (Lo) typ [µH]	Tolerance typ [± %]	DC Resistance (DCR) max [mΩ]	Saturation Current (Isat) typ [A]	Temperature Rise Current (Irms) typ [A]
F2D2-2016-4R7MC	4.70	20	4.00	42.0	21.0
F2D2-2016-6R8MC	6.80	20	4.30	25.0	20.0
F2D2-2016-8R2MC	8.20	20	4.30	25.0	20.0
F2D2-2016-100MC	10.0	20	6.30	24.0	16.0
F2D2-2016-220MC	22.0	20	6.30	10.0	16.0
F2D2-2016-330MC	33.0	20	15.0	9.00	12.0
F2D2-2016-470MC	47.0	20	15.0	6.50	12.0

Notes:
1. *Referenced ambient temperature 25°C*
2. *Test Condition: 100 kHz, 0.1 Vrms*
3. *Saturation Current - Isat (typ): DC current (A) that will cause L0 to drop approximately 20%*
   Isat (max): DC current (A) that will cause L0 to drop 20% max
   Temperature Rise Current - Irms (typ): DC current (A) that will cause an approximate ΔT of 40°C
   Irms (max): DC current (A) that will cause an approximate ΔT of 40°C max
4. *Operating temperature range includes self-temperature rise*

PART NUMBER KEY

F2D2 - 2016 - XXX XX

Type / Product Series
F2D2-2016 = High Current Power Inductors

Inductance *
1R0 = 1.0 µH

C = Coating

Inductance Tolerance
M = ±20%

** Note: Inductance expressed by three figures. The unit is micro henry (µH). The first and second figures are significant digits, the third figure expresses the number of zeros which follow the two figures. If there is a decimal point, it is expressed by the capital letter "R" (3R8 = 3.8 µH). In that case, all figures are significant digits.*

Please read our datasheet & drawing disclaimer here.

Downloaded from Arrow.com.

SAFETY AND COMPLIANCE

Parameter	Compliant
RoHS	Compliance with ROHS, Reach compliant and Halogen Free

ENVIROMENTAL

Parameter	Conditions	Min	Typ	Max	Units
Operating temperature	Including coils self-temeprature rise	-40		125	°C
Storage temperature		-40		125	°C

MECHANICAL

Parameter	Conditions	Min	Typ	Max	Units
Core material	Ferrite				
Dimensions	21.8 x 22.5 x 16.5				mm
Weight	18.92				g

MECHANICAL DRAWING

Units: mm

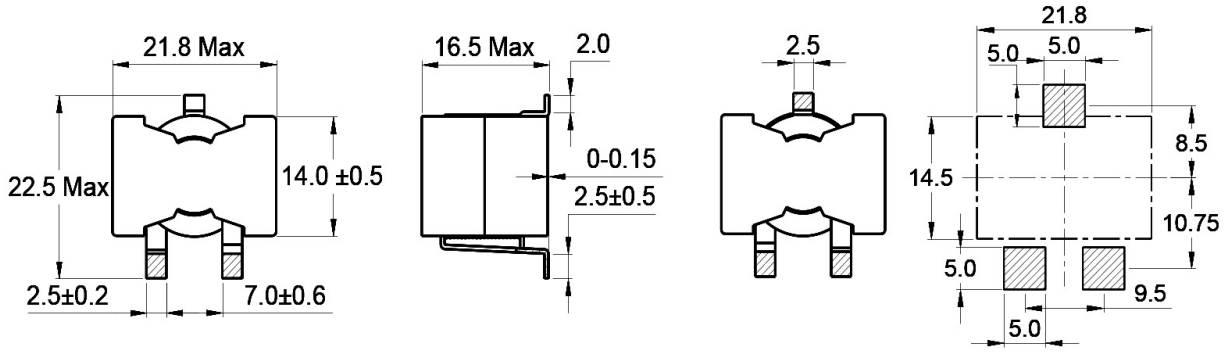

ELECTRICAL DIAGRAM

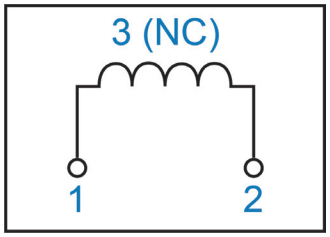

Downloaded from Arrow.com.

PERFORMANCE CURVES

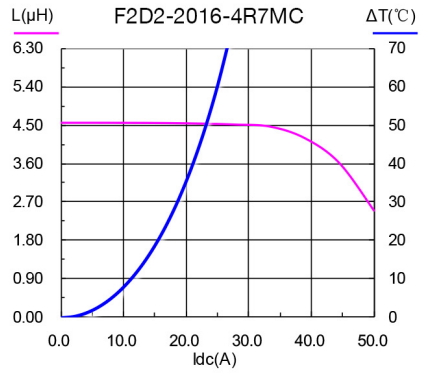

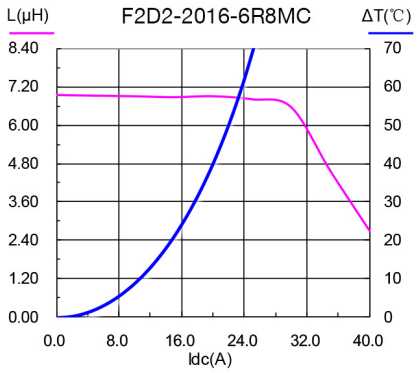

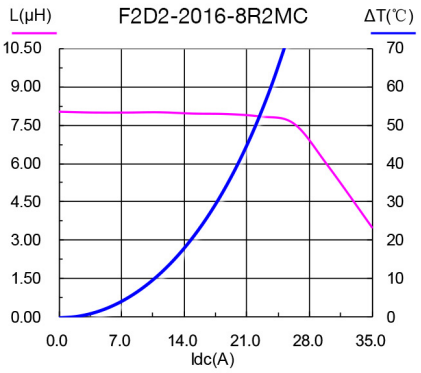

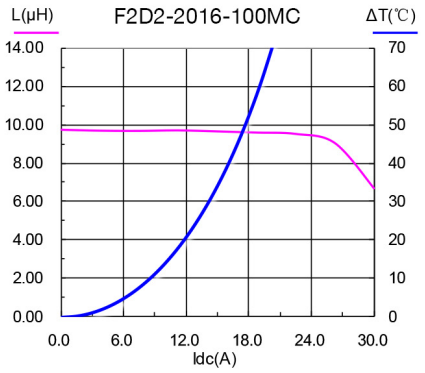

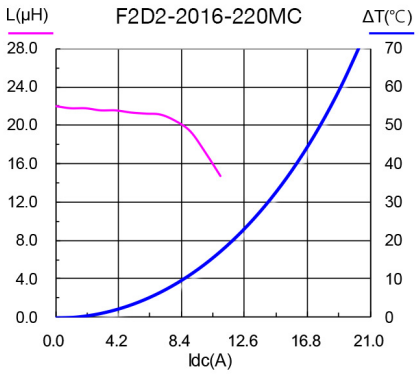

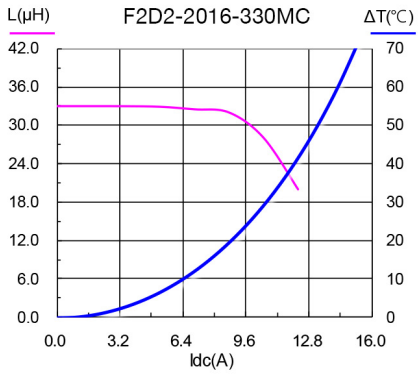

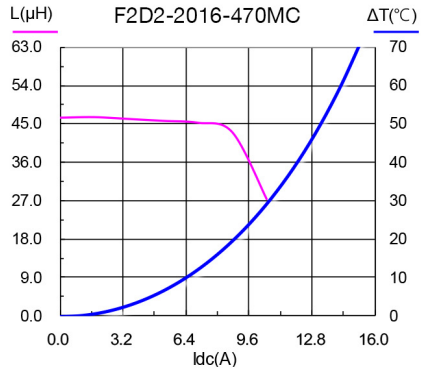

Downloaded from Arrow.com.

REFLOW SOLDERING TEMPERATURE CURVE

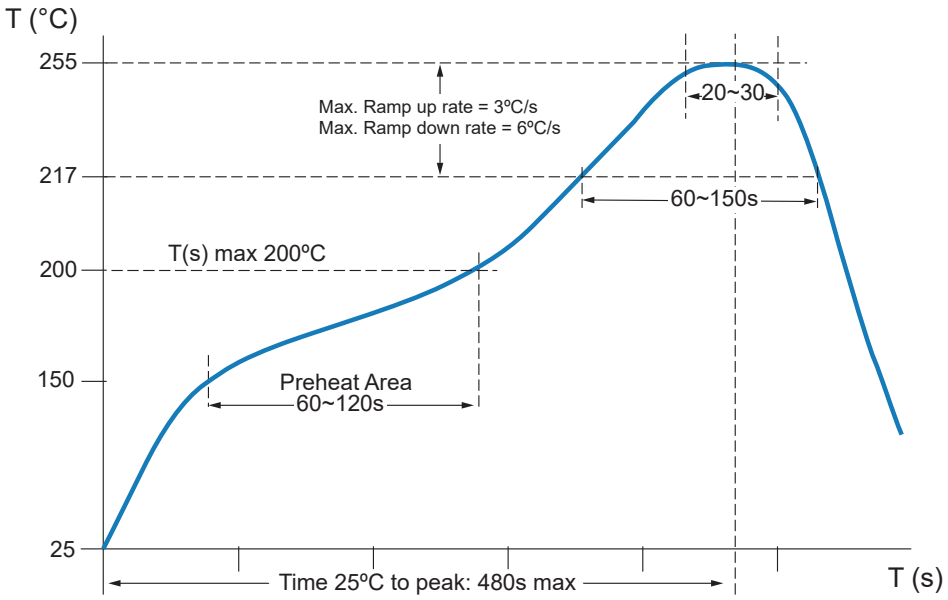

CLASSIFICATION OF PEAK PACKAGE BODY TEMPERATURE

	Package Thickness	Package Volume		
		< 350 mm³	350 ~ 2000 mm³	> 2000 mm³
PB-Free Assembly	< 1.6 mm	260 °C	260 °C	260 °C
	1.6 ~ 2.5 mm	260 °C	250 °C	245 °C
	≥ 2.5 mm	250 °C	245 °C	245 °C

QUANTITY PER REEL & PACKING INFORMATION

Units: mm

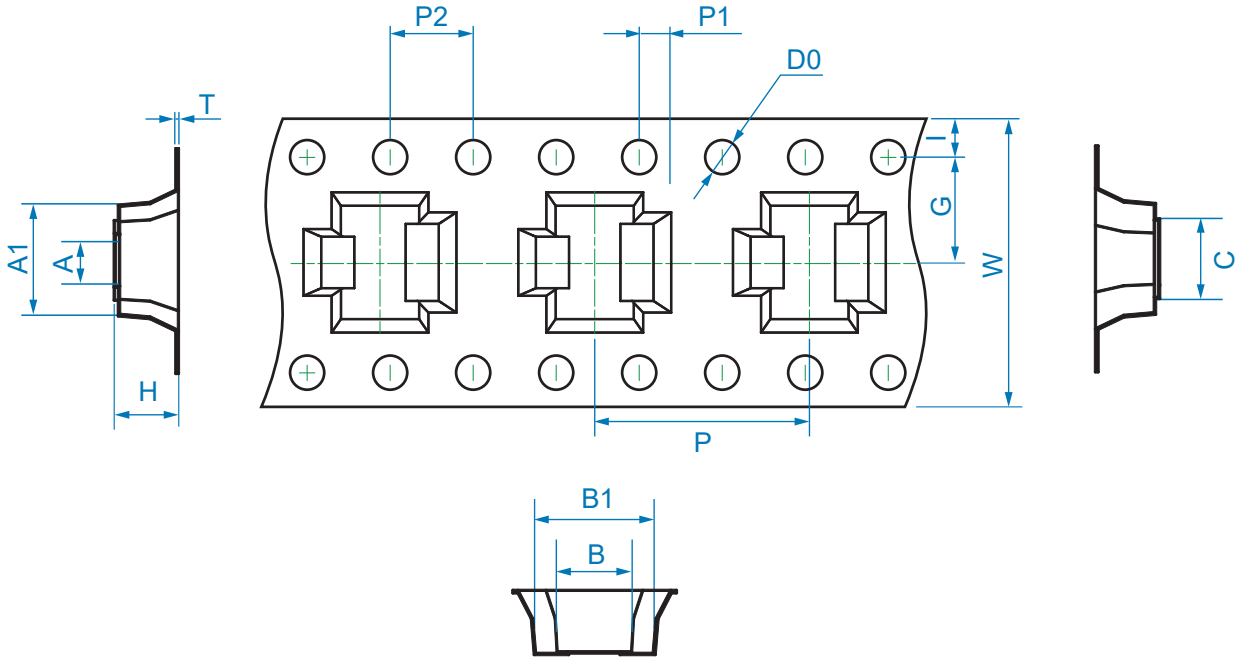

Downloaded from Arrow.com.

TAPE DIMENSIONS (mm)

Product Series	A	A1	B	B1	C	H	T
	10.0 ± 0.1	21.0 ± 0.1	14.5 ± 0.1	22.0 ± 0.1	15.0 ± 0.1	17.7 ± 0.1	0.5 ± 0.05
F2D2-2016	P	P1	P2	D0	G	I	W
	32.0 ± 0.1	2.0 ± 0.1	4.0 ± 0.1	1.5 +0.1/-0.0	20.2 ± 0.1	1.75 ± 0.1	44.0 ± 0.3

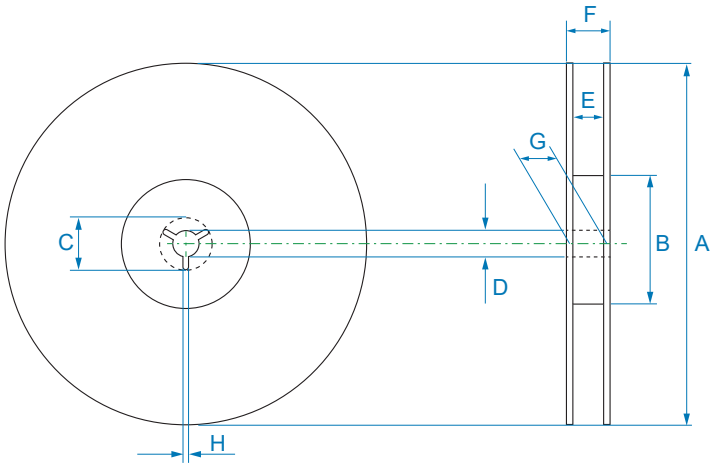

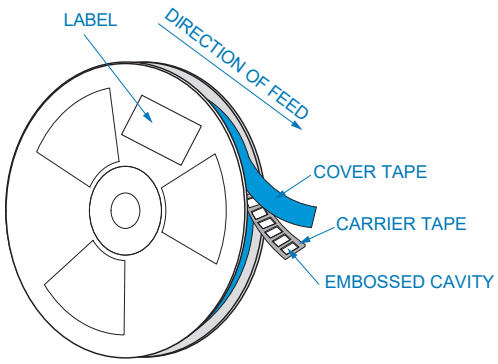

REEL DIMENSIONS (mm)

Product Series	A	B	C	D	E	F	G	H
F2D2-2016	330 ± 2.0	100 min	21.0 ± 0.8	13.0 ± 0.5	43.9 min	50.4 max	44.4 -2.0/-0.0	2.0 ± 0.5

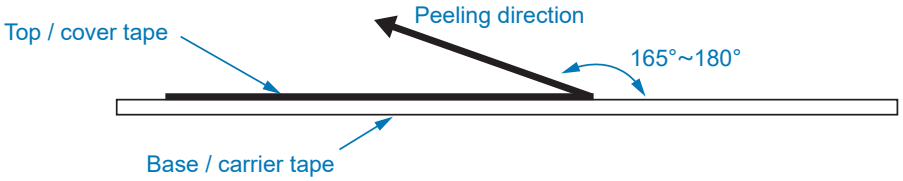

Peel-off Force

The peel-off speed shall be about 300 ±10 mm/min.
The peel-off force of top cover tape shall be between 0.1 to 1.3 N.

Downloaded from Arrow.com.

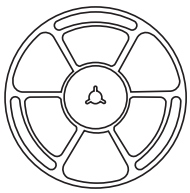

REEL

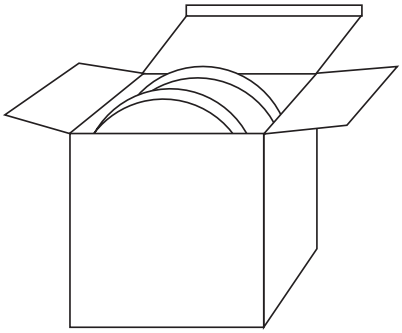

INSIDE BOX
(340 x 340 x 135 mm)

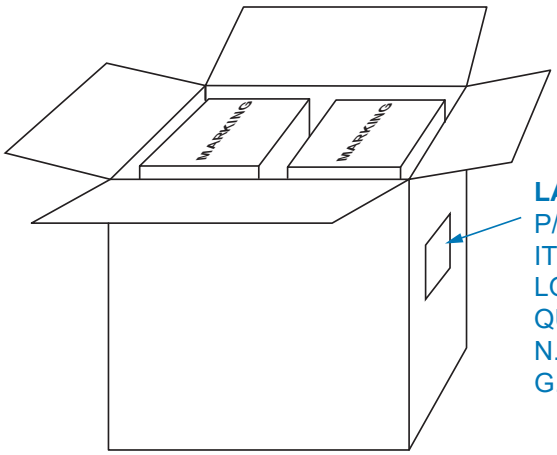

LABEL
P/N No:
ITEM No:
LOT No:
QUANTITY: Pcs
N. W.: kg
G. W.: kg

OUTSIDE CARTON
(360 x 360 x 295 mm)

QUANTITY PER PACKAGE

Product Series	Pcs per Reel	Pcs per Inside Box	Pcs per Outside Carton
F2D2-2016	100	200	400

Storage Conditions

a) Product in packing storage condition: temperature 5 ~ 40 °C, RH ≤ 70 %.
b) It is recommended to use inductors within 12 months of delivery for optimal performance.
c) Avoid storing in environments prone to high temperatures, excessive humidity, dust, or corrosion.

Downloaded from Arrow.com.

REVISION HISTORY

Rev.	Description	Date
1	initial release	December/02/2024

NUCLEAR AND MEDICAL APPLICATIONS - Products are not designed or intended for use as critical components in life support systems, equipment used in hazardous environments, or nuclear control systems.

TECHNICAL REVISIONS - The appearance of products, including safety agency certifications pictured on labels, may change depending on the date manufactured. Specifications are subject to change without notice.

POWER | PROTECT | CONNECT

Bel Fuse Inc.
300 Executive Drive, Suite 300
West Orange, NJ 07052
United States

© 2024 Bel Fuse Inc.

Toll Free 866-239-5777
Tel 516-239-5777 | Fax 516-239-7208
sales@signaltransformer.com
techhelp@signaltransformer.com

belfuse.com

Downloaded from Arrow.com.