REVISIONS					
P	LTR	DESCRIPTION	DATE	DWN	APVD
	B	Drawing Creation	17/01/2023	WLA	-

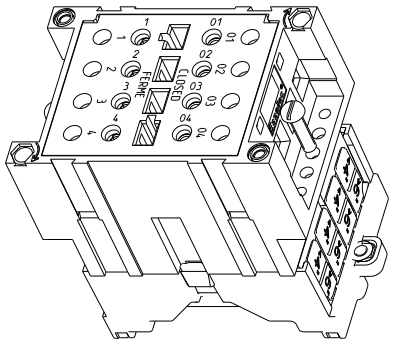

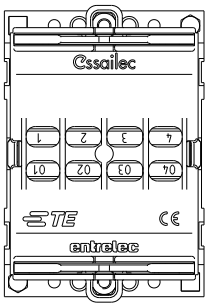

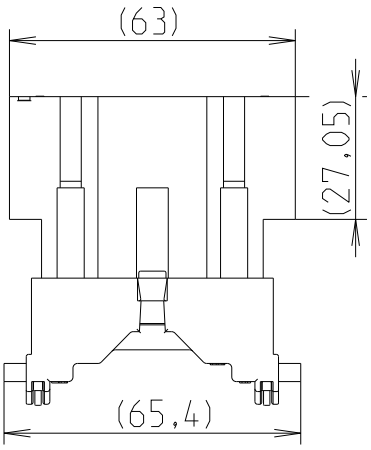

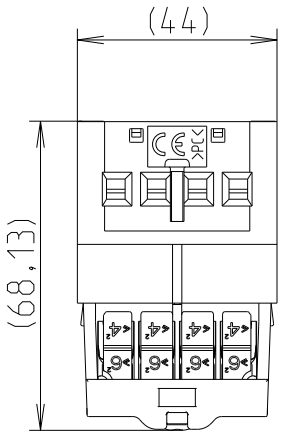

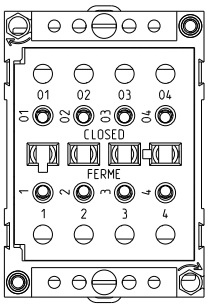

© 2022 TE Connectivity. All Rights Reserved.

DIMENSIONS: mm	DWN 17-Jan-23 02:46:45 PM Lulla, Walter	MATERIAL -	FINISH -
TOLERANCES UNLESS OTHERWISE SPECIFIED: 0 PLC ±- 1 PLC ±0,1 2 PLC ±0,01 3 PLC ±0,001 4 PLC ±0,0001 ANGLES ±-	CHK -	TE Connectivity	
	APVD -		
	PRODUCT SPEC -	NAME DEF-D-VA-SAFE 1SNA566025R0000	
	APPLICATION SPEC -	SIZE A4 / CAGE CODE 00779 / DRAWING NO C-1SNP300343-0146	RESTRICTED TO -
	WEIGHT 130,684	CUSTOMER DRAWING	SCALE 3:5 / SHEET 1 OF 1 / REV B

Downloaded from Arrow.com.