CGH40025

25 W, RF Power GaN HEMT

Description

Wolfspeed's CGH40025 is an unmatched, gallium nitride (GaN) high electron mobility transistor (HEMT). The CGH40025, operating from a 28 volt rail, offers a general purpose, broadband solution to a variety of RF and microwave applications. GaN HEMTs offer high efficiency, high gain and wide bandwidth capabilities making the CGH40025 ideal for linear and compressed amplifier circuits. The transistor is available in a screw-down, flange package and solder-down, pill package.

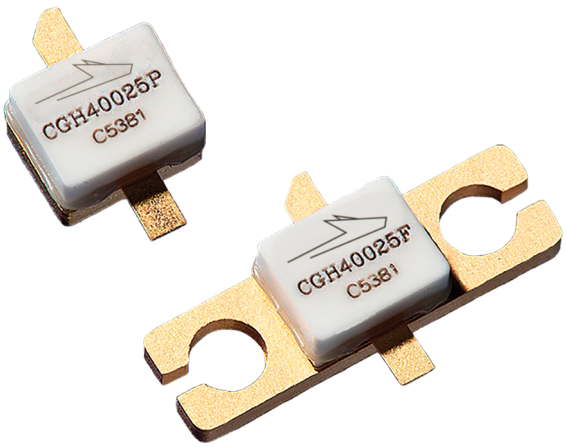

Package Types: 440196 & 440166
PN: CGH40025P & CGH40025F

Features

- Up to 6 GHz Operation
- 15 dB Small Signal Gain at 2.0 GHz
- 13 dB Small Signal Gain at 4.0 GHz
- 30 W typical P_{SAT}
- 62% Efficiency at P_{SAT}
- 28 V Operation

Applications

- 2-Way Private Radio
- Broadband Amplifiers
- Cellular Infrastructure
- Test Instrumentation
- Class A, AB, Amplifiers suitable for OFDM, W-CDMA, EDGE, CDMA waveforms

Large Signal Models Available for ADS and MWO

RoHS compliant

4600 Silicon Drive | Durham, NC 27703 | Tel: +1.919.313.5300

© 2022 Wolfspeed, Inc. All rights reserved. Wolfspeed® and the Wolfstreak logo are registered trademarks and the Wolfspeed logo is a trademark of Wolfspeed, Inc.
The information in this document is subject to change without notice.
Downloaded from Arrow.com.

Absolute Maximum Ratings (not simultaneous) at 25˚C Case Temperature

Parameter	Symbol	Rating	Units	Conditions
Drain-Source Voltage	V_{DSS}	120	V	25ºC
Gate-to-Source Voltage	V_{GS}	-10, +2		
Storage Temperature	T_{STG}	-65, +150	ºC	
Operating Junction Temperature	T_J	225		
Maximum Forward Gate Current	I_{GMAX}	7.0	mA	25ºC
Maximum Drain Current[1]	I_{DMAX}	3	A	
Soldering Temperature[2]	T_S	245	ºC	
Screw Torque	τ	40	in-oz	
Thermal Resistance, Junction to Case[3]	$R_{\theta JC}$	4.8	ºC/W	85ºC
Case Operating Temperature[3, 4]	T_C	-40, +150	ºC	

Notes:
[1] Current limit for long term, reliable operation
[2] Refer to the Application Note on soldering at wolfspeed.com/rf/document-library
[3] Measured for the CGH40025F at P_{DISS} = 28 W
[4] See also, the Power Dissipation De-rating Curve on Page 6

Electrical Characteristics (T_C = 25˚C)

Characteristics	Symbol	Min.	Typ.	Max.	Units	Conditions
DC Characteristics[1]						
Gate Threshold Voltage	$V_{GS(th)}$	-3.8	-3.0	-2.3	V_{DC}	V_{DS} = 10 V, I_D = 7.2 mA
Gate Quiescent Voltage	$V_{GS(Q)}$	—	-2.7	—		V_{DS} = 28 V, I_D = 250 mA
Saturated Drain Current	I_{DS}	5.8	7.0	—	A	V_{DS} = 6.0 V, V_{GS} = 2.0 V
Drain-Source Breakdown Voltage	V_{BR}	84	—	—	V_{DC}	V_{GS} = -8 V, I_D = 7.2 mA
RF Characteristics[2] (T_C = 25˚C, F_0 = 3.7 GHz unless otherwise noted)						
Small Signal Gain	G_{SS}	12	13	—	dB	V_{DD} = 28 V, I_{DQ} = 250 mA
Output Power[3]	P_{SAT}	20	30	—	W	
Drain Efficiency[4]	η	55	62	—	%	V_{DD} = 28 V, I_{DQ} = 250 mA, P_{SAT}
Output Mismatch Stress	VSWR	—	—	10 : 1	Ψ	No damage at all phase angles, V_{DD} = 28 V, I_{DQ} = 250 mA, P_{OUT} = 25 W CW
Dynamic Characteristics						
Input Capacitance	C_{GS}	—	9.0	—	pF	V_{DS} = 28 V, V_{GS} = -8 V, f = 1 MHz
Output Capacitance	C_{DS}	—	2.6	—		
Feedback Capacitance	C_{GD}	—	0.4	—		

Notes:
[1] Measured on wafer prior to packaging
[2] Measured in CGH40025-AMP
[3] P_{SAT} is defined as I_G = 0.72 mA
[4] Drain Efficiency = P_{OUT}/P_{DC}

© 2022 Wolfspeed, Inc. All rights reserved. Wolfspeed® and the Wolfstreak logo are registered trademarks and the Wolfspeed logo is a trademark of Wolfspeed, Inc.
The information in this document is subject to change without notice.
Downloaded from Arrow.com.

Typical Performance

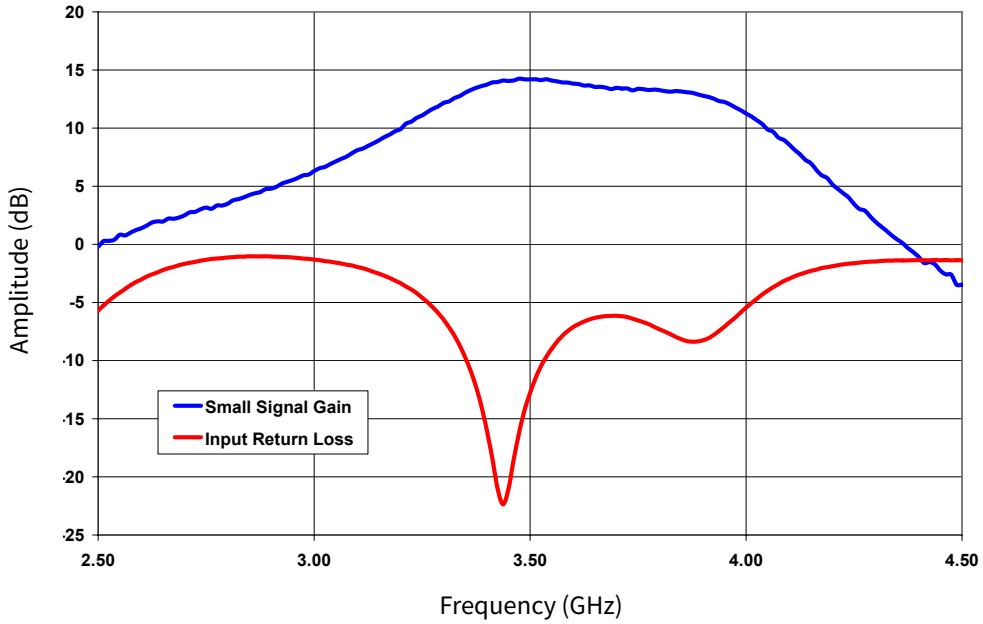

Figure 1. Small Signal Gain and Return Loss vs Frequency of the CGH40025F in the CGH40025-AMP

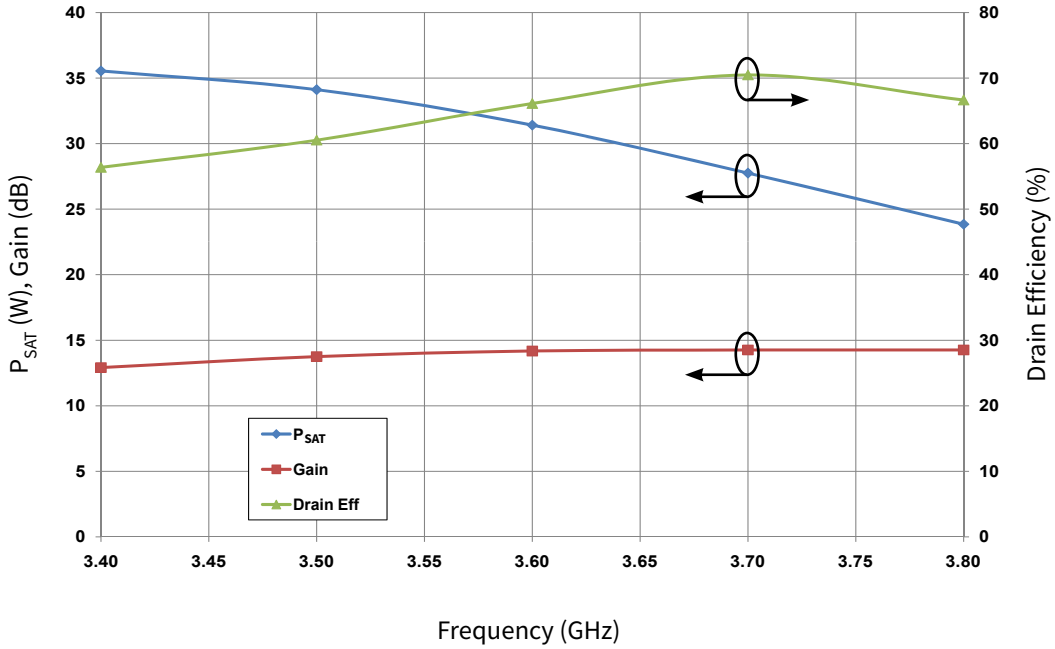

Figure 2. P_{SAT}, Gain, and Drain Efficiency vs Frequency of the CGH40025F in the CGH40025-AMP
V_{DD} = 28 V, I_{DQ} = 250 mA

© 2022 Wolfspeed, Inc. All rights reserved. Wolfspeed® and the Wolfstreak logo are registered trademarks and the Wolfspeed logo is a trademark of Wolfspeed, Inc.
The information in this document is subject to change without notice.
Downloaded from Arrow.com.

Typical Performance

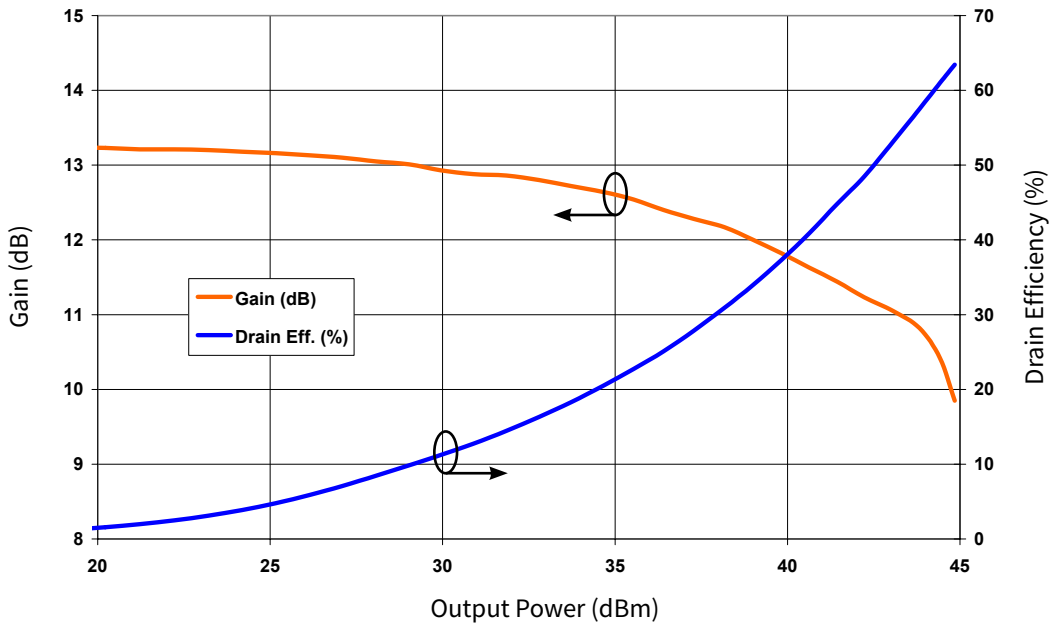

Figure 3. Swept CW Data of CGH40025 vs. Output Power with Source and Load Impedances Optimized for P_{SAT} Power in CGH40025-AMP
V_{DD} = 28 V, I_{DQ} = 250 mA, Freq = 3.7 GHz

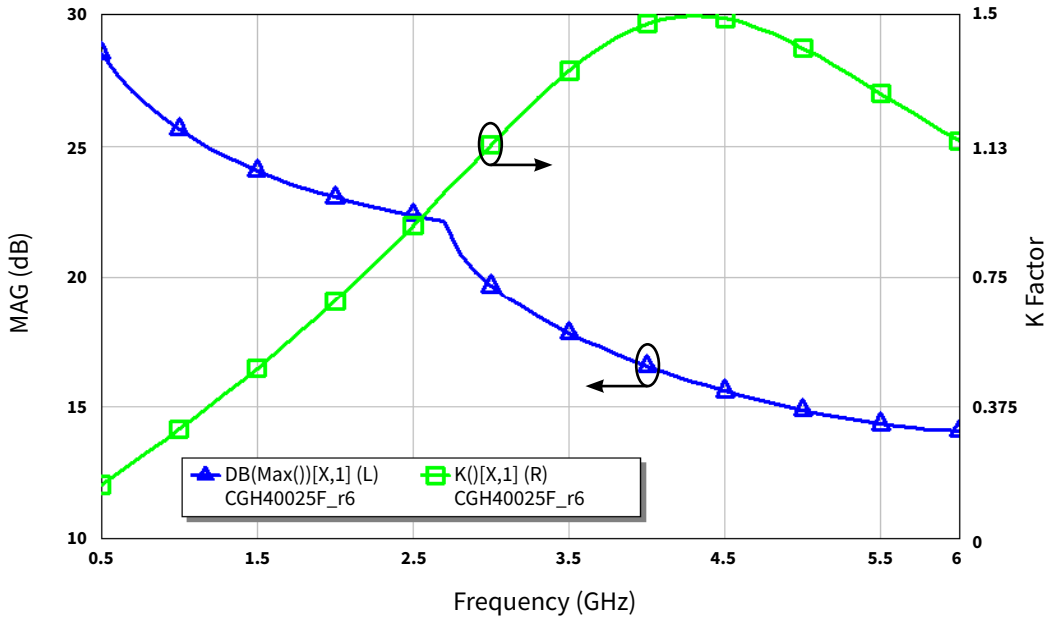

Figure 4. Maximum Available Gain and K Factor of the CGH40025
V_{DD} = 28 V, I_{DQ} = 250 mA

© 2022 Wolfspeed, Inc. All rights reserved. Wolfspeed® and the Wolfstreak logo are registered trademarks and the Wolfspeed logo is a trademark of Wolfspeed, Inc.
The information in this document is subject to change without notice.
Downloaded from Arrow.com.

Typical Noise Performance

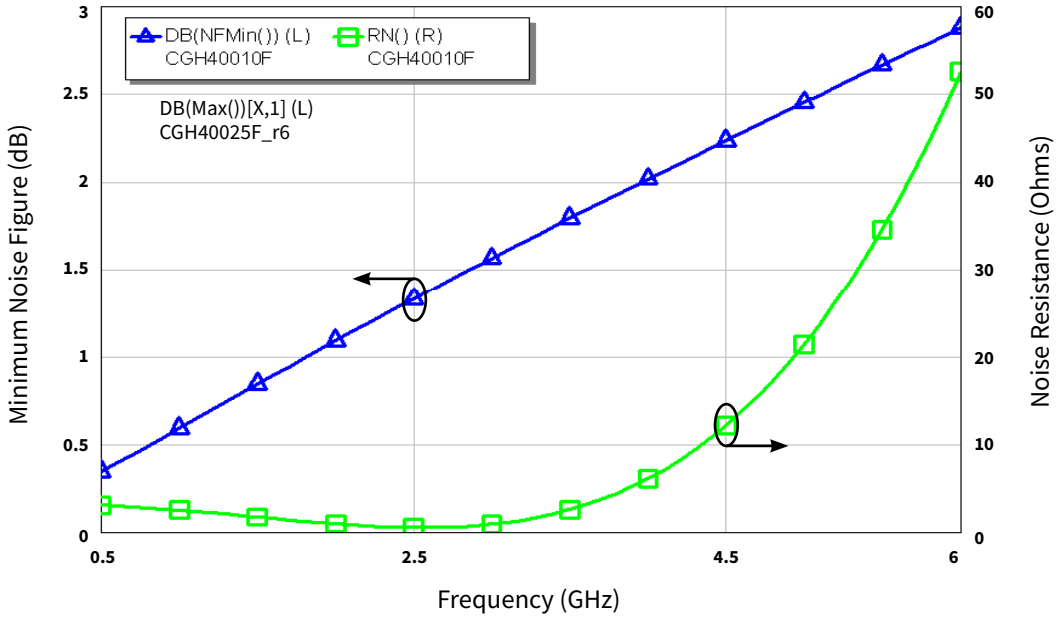

Figure 5. Simulated Minimum Noise Figure and Noise Resistance vs Frequency of the CGH40025F
V_{DD} = 28 V, I_{DQ} = 250 mA

Electrostatic Discharge (ESD) Classifications

Parameter	Symbol	Class	Classification Level	Test Methodology
Human Body Model	HBM	1A	ANSI/ESDA/JEDEC JS-001 Table 3	JEDEC JESD22 A114-D
Charge Device Model	CDM	C3	ANSI/ESDA/JEDEC JS-002 Table 3	JEDEC JESD22 C101-C

© 2022 Wolfspeed, Inc. All rights reserved. Wolfspeed® and the Wolfstreak logo are registered trademarks and the Wolfspeed logo is a trademark of Wolfspeed, Inc.
The information in this document is subject to change without notice.
Downloaded from Arrow.com.

Source and Load Impedances

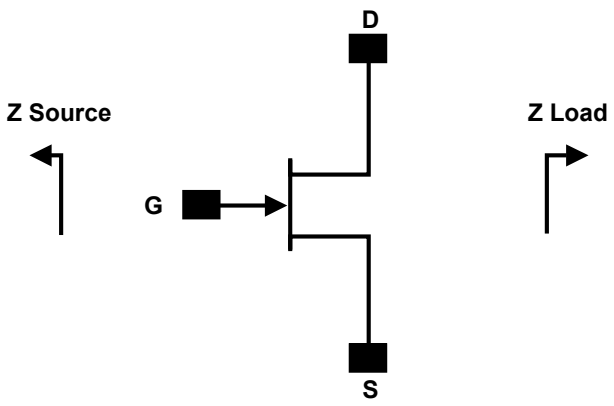

Frequency (MHz)	Z Source	Z Load
500	7.75 + j15.5	20 + j5.2
1000	3.11 + j5.72	17 + j6.66
1500	2.86 + j1.63	16.8 + j3.2
2500	2.4 - j3.52	8.02 + j4.32
3500	1.31 - j7.3	5.85 - j0.51

Notes:
[1] V_{DD} = 28 V, I_{DQ} = 250mA, in the 440166 package
[2] Optimized for power, gain, P_{SAT} and PAE
[3] When using this device at low frequency, series resistors should be used to maintain amplifier stability

CGH40025 Power Dissipation De-rating Curve

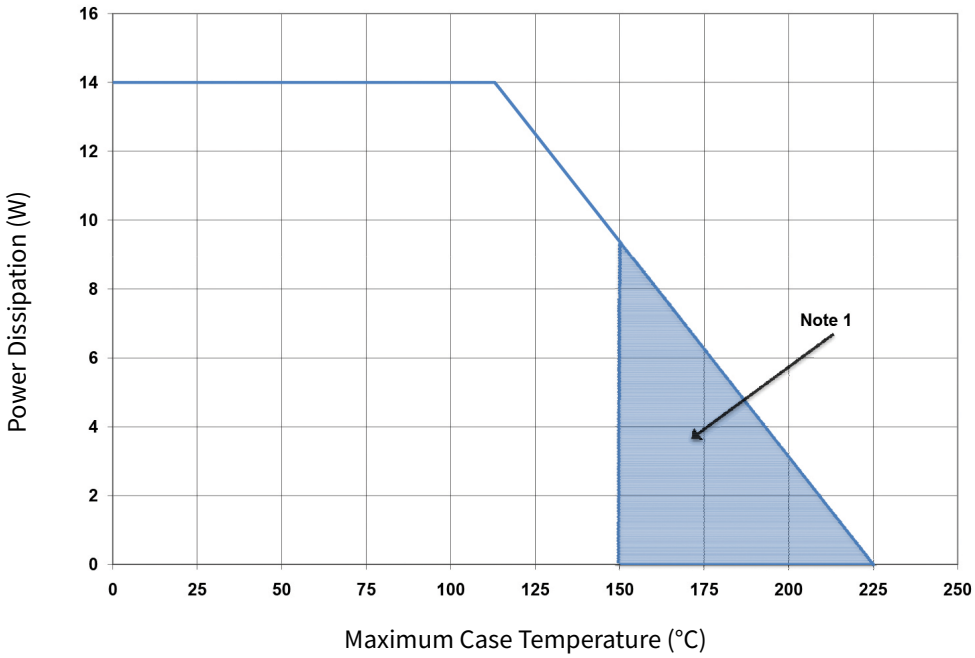

Note:
[1] Area exceeds Maximum Case Operating Temperature (See Page 2).

© 2022 Wolfspeed, Inc. All rights reserved. Wolfspeed® and the Wolfstreak logo are registered trademarks and the Wolfspeed logo is a trademark of Wolfspeed, Inc.
The information in this document is subject to change without notice.
Downloaded from Arrow.com.

CGH40025-AMP Demonstration Amplifier Circuit Schematic

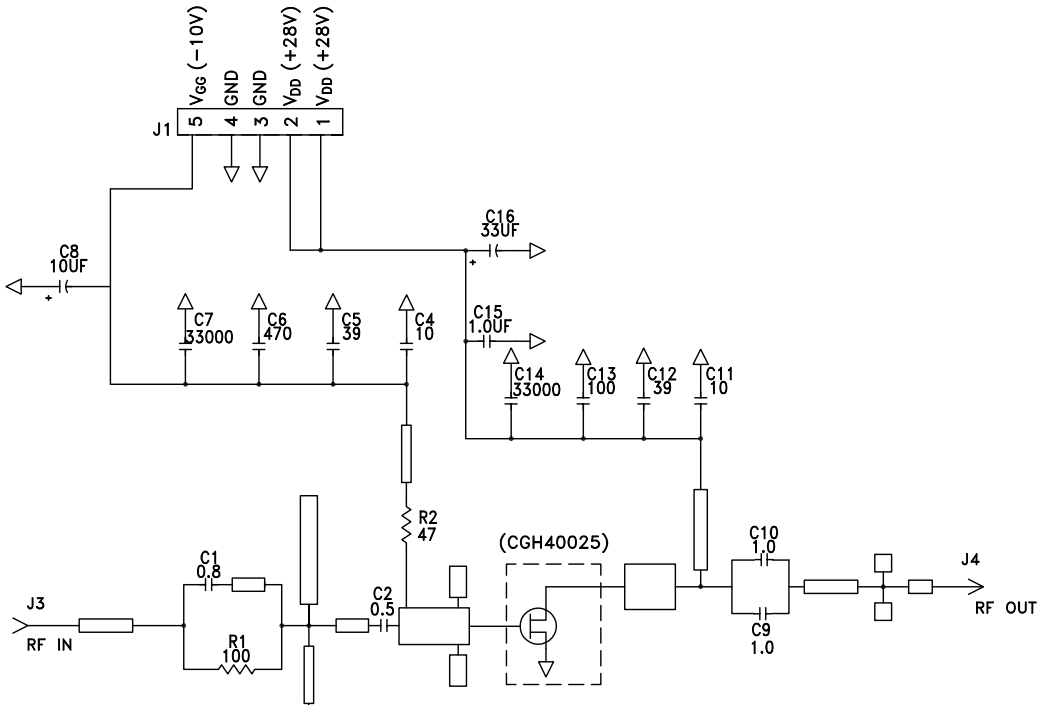

CGH40025-AMP Demonstration Amplifier Circuit Outline

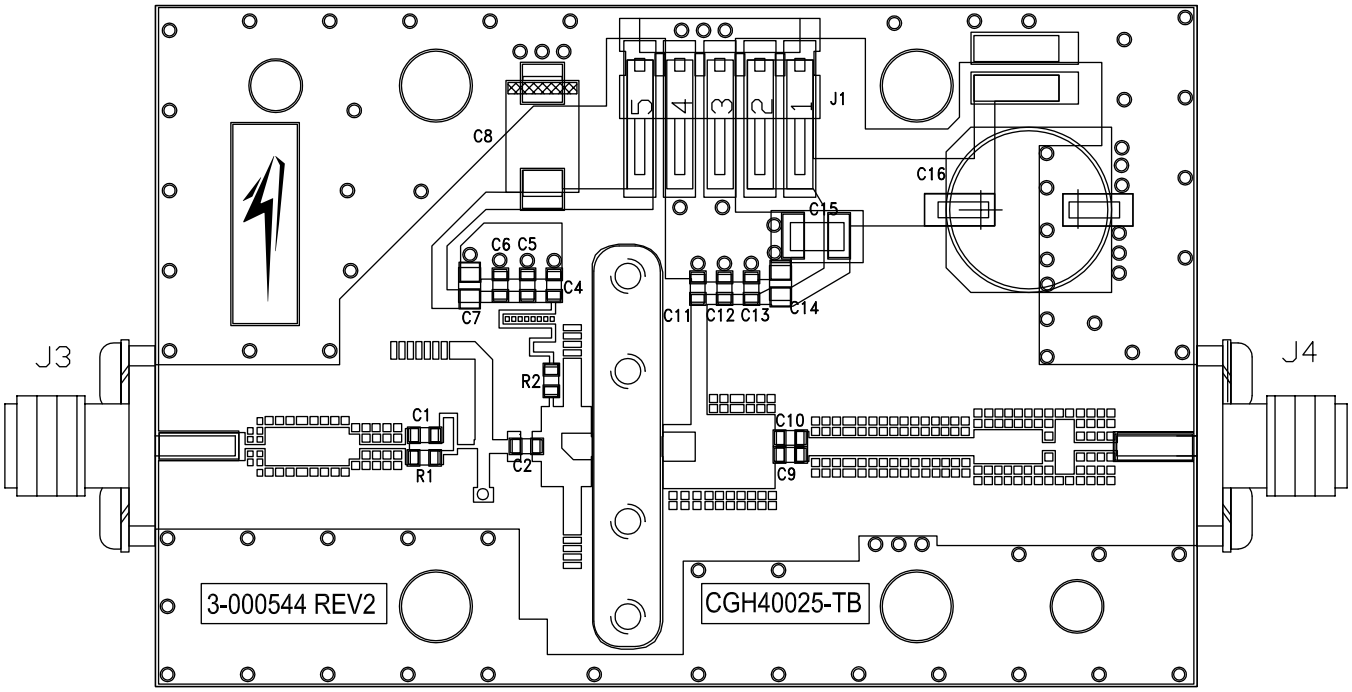

© 2022 Wolfspeed, Inc. All rights reserved. Wolfspeed® and the Wolfstreak logo are registered trademarks and the Wolfspeed logo is a trademark of Wolfspeed, Inc.
The information in this document is subject to change without notice.
Downloaded from Arrow.com.

CGH40025-AMP Demonstration Amplifier Circuit Bill of Materials

Designator	Description	Qty
R2	RES, 1/16W, 0603, 1%, 47 OHMS	1
R1	RES, 1/16W, 0603, 1%, 100 OHMS	1
C6	CAP, 470pF, 5%, 100V, 0603	1
C16	CAP, 33 µF, 20%, G CASE	1
C15	CAP, 1.0µF, 100V, 10%, X7R, 1210	1
C8	CAP, 10µF 16V TANTALUM	1
C13	CAP, 100.0pF, +/-5%, 0603	1
C1	CAP, 0.8pF, +/-0.1pF, 0603	1
C2	CAP, 0.5pF, +/-0.05pF, 0603	1
C9, C10	CAP, 1.0pF, +/-0.1pF, 0603	2
C4, C11	CAP, 10.0pF, +/-5%, 0603	2
C5, C12	CAP, 39pF, +/-5%, 0603	2
C7, C14	CAP, 33000pF, 0805, 100V, X7R	2
J3, J4	CONN SMA STR PANEL JACK RECP	2
J1	HEADER RT>PLZ .1CEN LK 5POS	1
—	PCB, RO4350B, Er = 3.48, h = 20 mil	1
—	CGH40025F or CGH40025P	1

CGH40025F-AMP Demonstration Amplifier Circuit

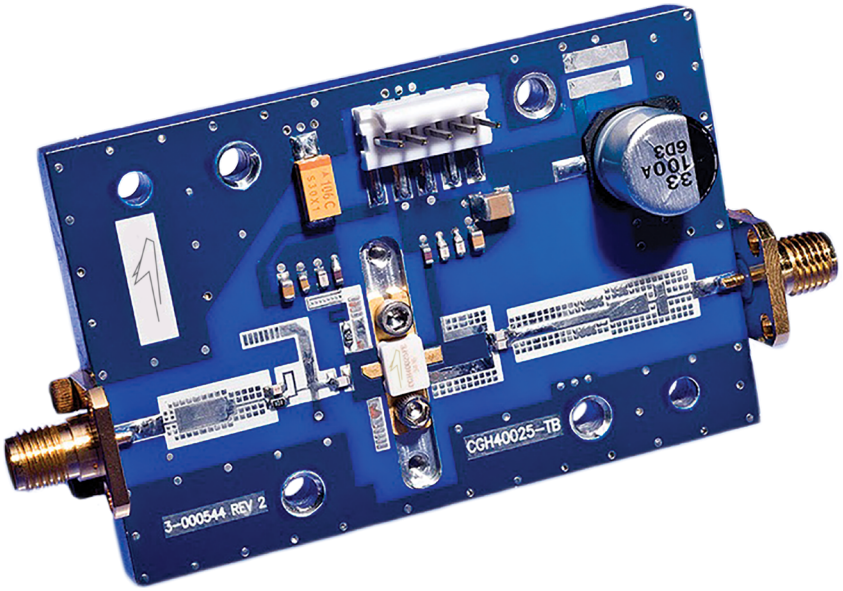

© 2022 Wolfspeed, Inc. All rights reserved. Wolfspeed® and the Wolfstreak logo are registered trademarks and the Wolfspeed logo is a trademark of Wolfspeed, Inc.
The information in this document is subject to change without notice.
Downloaded from Arrow.com.

Typical Package S-Parameters for CGH40025
(Small Signal, V_{DS} = 28 V, I_{DQ} = 100 mA, angle in degrees)

Frequency	Mag S11	Ang S11	Mag S21	Ang S21	Mag S12	Ang S12	Mag S22	Ang S22
500 MHz	0.902	-151.72	11.80	92.09	0.025	6.22	0.393	-140.34
600 MHz	0.901	-157.13	9.89	87.31	0.025	2.28	0.402	-143.54
700 MHz	0.900	-161.20	8.49	83.18	0.025	-0.99	0.412	-145.64
800 MHz	0.900	-164.41	7.42	79.49	0.025	-3.82	0.424	-147.11
900 MHz	0.901	-167.04	6.58	76.10	0.024	-6.33	0.436	-148.22
1.0 GHz	0.902	-169.26	5.89	72.93	0.024	-8.60	0.449	-149.12
1.1 GHz	0.903	-171.19	5.33	69.93	0.024	-10.69	0.462	-149.91
1.2 GHz	0.904	-172.89	4.86	67.07	0.023	-12.61	0.476	-150.65
1.3 GHz	0.905	-174.43	4.45	64.33	0.023	-14.39	0.489	-151.38
1.4 GHz	0.906	-175.84	4.10	61.68	0.022	-16.06	0.503	-152.12
1.5 GHz	0.907	-177.14	3.80	59.12	0.022	-17.61	0.517	-152.87
1.6 GHz	0.909	-178.36	3.54	56.64	0.022	-19.05	0.531	-153.65
1.7 GHz	0.910	-179.52	3.30	54.22	0.021	-20.38	0.545	-154.46
1.8 GHz	0.912	179.38	3.09	51.87	0.021	-21.62	0.558	-155.29
1.9 GHz	0. 913	178.33	2.90	49.58	0.020	-22.75	0.571	-156.15
2.0 GHz	0.914	177.30	2.73	47.34	0.020	-23.78	0.584	-157.04
2.1 GHz	0.916	176.31	2.58	45.15	0.019	-24.70	0.596	-157.95
2.2 GHz	0.917	175.34	2.44	43.02	0.019	-25.52	0.608	-158.88
2.3 GHz	0.918	174.39	2.31	40.92	0.018	-26.22	0.620	-159.82
2.4 GHz	0.920	173.46	2.19	38.88	0.018	-26.82	0.631	-160.78
2.5 GHz	0.921	172.54	2.09	36.87	0.017	-27.29	0.642	-161.76
2.6 GHz	0.922	171.63	1.99	34.91	0.016	-27.64	0.652	-162.74
2.7 GHz	0.923	170.73	1.90	32.98	0.016	-27.85	0.662	-163.73
2.8 GHz	0.925	169.84	1.82	31.09	0.015	-27.92	0.672	-164.73
2.9 GHz	0.926	168.95	1.74	29.24	0.015	-27.85	0.681	-165.73
3.0 GHz	0.927	168.07	1.67	27.41	0.014	-27.61	0.690	-166.74
3.2 GHz	0.929	166.30	1.54	23.86	0.013	-26.63	0.706	-168.76
3.4 GHz	0.931	164.54	1.42	20.42	0.013	-24.89	0.721	-170.79
3.6 GHz	0.932	162.78	1.33	17.08	0.012	-22.30	0.735	-172.82
3.8 GHz	0.934	161.00	1.24	13.84	0.011	-18.80	0.748	-174.85
4.0 GHz	0.935	159.21	1.16	10.67	0.011	-14.40	0.759	-176.88
4.2 GHz	0.936	157.39	1.10	7.58	0.010	-9.18	0.769	-178.90
4.4 GHz	0.937	155.55	1.04	4.55	0.010	-3.38	0.778	179.07
4.6 GHz	0.938	153.67	0.98	1.57	0.010	2.65	0.787	177.04
4.8 GHz	0.939	151.77	0.94	-1.36	0.011	8.52	0.794	175.00
5.0 GHz	0.939	149.82	0.89	-4.25	0.011	13.87	0.801	172.96
5.2 GHz	0.939	147.82	0.86	-7.11	0.012	18.48	0.807	170.90
5.4 GHz	0.939	145.78	0.82	-9.95	0.013	22.25	0.812	168.83
5.6 GHz	0.940	143.68	0.79	-12.78	0.014	25.17	0.817	166.74
5.8 GHz	0.939	141.53	0.77	-15.59	0.016	27.32	0.821	164.62
6.0 GHz	0.939	139.31	0.74	-18.41	0.017	28.77	0.825	162.48

To download the s-parameters in s2p format, go to the CGH40025 Product page and click on the documentation tab.

© 2022 Wolfspeed, Inc. All rights reserved. Wolfspeed® and the Wolfstreak logo are registered trademarks and the Wolfspeed logo is a trademark of Wolfspeed, Inc.
The information in this document is subject to change without notice.
Downloaded from Arrow.com.

Typical Package S-Parameters for CGH40025
(Small Signal, V_{DS} = 28 V, I_{DQ} = 250 mA, angle in degrees)

Frequency	Mag S11	Ang S11	Mag S21	Ang S21	Mag S12	Ang S12	Mag S22	Ang S22
500 MHz	0.917	-157.22	12.62	91.45	0.018	7.56	0.458	-158.97
600 MHz	0.916	-161.92	10.57	87.33	0.018	4.70	0.465	-160.93
700 MHz	0.916	-165.46	9.07	83.78	0.018	2.41	0.472	-162.19
800 MHz	0.916	-168.28	7.94	80.58	0.018	0.51	0.478	-163.04
900 MHz	0.916	-170.61	7.05	77.64	0.017	-1.12	0.485	-163.64
1.0 GHz	0.916	-172.60	6.33	74.88	0.017	-2.55	0.493	-164.09
1.1 GHz	0.917	-174.33	5.74	72.25	0.017	-3.82	0.500	-164.45
1.2 GHz	0.917	-175.88	5.24	69.73	0.017	-4.94	0.508	-164.77
1.3 GHz	0.918	-177.28	4.82	67.30	0.017	-5.95	0.516	-165.06
1.4 GHz	0.918	-178.57	4.46	64.94	0.017	-6.84	0.525	-165.36
1.5 GHz	0.919	-179.78	4.14	62.65	0.016	-7.63	0.533	-165.67
1.6 GHz	0.919	179.09	3.87	60.41	0.016	-8.31	0.542	-165.99
1.7 GHz	0.920	178.01	3.62	58.22	0.016	-8.90	0.550	-166.35
1.8 GHz	0.921	176.98	3.40	56.07	0.016	-9.39	0.559	-166.73
1.9 GHz	0.921	175.99	3.21	53.97	0.015	-9.77	0.568	-167.14
2.0 GHz	0.922	175.03	3.03	51.90	0.015	-10.06	0.577	-167.59
2.1 GHz	0.923	174.09	2.87	49.87	0.015	-10.24	0.585	-168.07
2.2 GHz	0.924	173.17	2.73	47.87	0.014	-10.31	0.594	-168.57
2.3 GHz	0.924	172.27	2.60	45.91	0.014	-10.27	0.602	-169.11
2.4 GHz	0.925	171.39	2.47	43.97	0.014	-10.12	0.610	-169.67
2.5 GHz	0.926	170.51	2.36	42.07	0.014	-9.85	0.619	-170.26
2.6 GHz	0.926	169.65	2.26	40.19	0.013	-9.46	0.626	-170.88
2.7 GHz	0.927	168.79	2.16	38.34	0.013	-8.95	0.634	-171.52
2.8 GHz	0.928	167.93	2.08	36.52	0.013	-8.31	0.642	-172.17
2.9 GHz	0.928	167.08	1.99	34.72	0.013	-7.54	0.649	-172.85
3.0 GHz	0.929	166.24	1.92	32.94	0.013	-6.65	0.656	-173.55
3.2 GHz	0.930	164.54	1.78	29.45	0.012	-4.49	0.670	-175.00
3.4 GHz	0.931	162.85	1.66	26.05	0.012	-1.85	0.683	-176.50
3.6 GHz	0.932	161.14	1.55	22.72	0.012	1.19	0.695	-178.06
3.8 GHz	0.933	159.42	1.46	19.46	0.012	4.55	0.706	-179.66
4.0 GHz	0.933	157.68	1.38	16.27	0.012	8.08	0.716	178.70
4.2 GHz	0.934	155.91	1.31	13.12	0.012	11.64	0.726	177.02
4.4 GHz	0.934	154.11	1.24	10.03	0.013	15.08	0.735	175.30
4.6 GHz	0.935	152.28	1.18	6.97	0.013	18.26	0.743	173.56
4.8 GHz	0.935	150.41	1.13	3.95	0.014	21.09	0.750	171.78
5.0 GHz	0.935	148.49	1.08	0.96	0.015	23.50	0.756	169.97
5.2 GHz	0.935	146.53	1.04	-2.00	0.016	25.48	0.762	168.12
5.4 GHz	0.935	144.52	1.00	-4.96	0.017	27.02	0.768	166.24
5.6 GHz	0.935	142.45	0.97	-7.90	0.018	28.12	0.773	164.32
5.8 GHz	0.934	140.31	0.94	-10.84	0.020	28.83	0.777	162.36
6.0 GHz	0.934	138.12	0.91	-13.79	0.021	29.18	0.781	160.36

To download the s-parameters in s2p format, go to the CGH40025 Product page and click on the documentation tab.

© 2022 Wolfspeed, Inc. All rights reserved. Wolfspeed® and the Wolfstreak logo are registered trademarks and the Wolfspeed logo is a trademark of Wolfspeed, Inc.
The information in this document is subject to change without notice.
Downloaded from Arrow.com.

Typical Package S-Parameters for CGH40025
(Small Signal, V_{DS} = 28 V, I_{DQ} = 400 mA, angle in degrees)

Frequency	Mag S11	Ang S11	Mag S21	Ang S21	Mag S12	Ang S12	Mag S22	Ang S22
500 MHz	0.924	-159.12	12.64	91.13	0.015	8.27	0.485	-163.72
600 MHz	0.923	-163.56	10.58	87.23	0.015	5.84	0.491	-165.34
700 MHz	0.923	-166.92	9.08	83.86	0.015	3.96	0.497	-166.41
800 MHz	0.923	-169.60	7.95	80.83	0.015	2.43	0.502	-167.13
900 MHz	0.923	-171.82	7.06	78.03	0.015	1.16	0.508	-167.65
1.0 GHz	0.923	-173.72	6.34	75.40	0.015	0.08	0.514	-168.05
1.1 GHz	0.923	-175.39	5.75	72.89	0.015	-0.84	0.520	-168.36
1.2 GHz	0.924	-176.88	5.26	70.48	0.015	-1.62	0.526	-168.63
1.3 GHz	0.924	-178.24	4.84	68.15	0.015	-2.29	0.533	-168.88
1.4 GHz	0.924	-179.50	4.48	65.89	0.015	-2.85	0.539	-169.13
1.5 GHz	0.925	179.33	4.17	63.68	0.014	-3.31	0.546	-169.38
1.6 GHz	0.925	178.22	3.89	61.52	0.014	-3.67	0.553	-169.65
1.7 GHz	0.926	177.17	3.65	59.41	0.014	-3.93	0.560	-169.94
1.8 GHz	0.926	176.16	3.43	57.34	0.014	-4.09	0.568	-170.26
1.9 GHz	0.927	175.18	3.24	55.30	0.014	-4.16	0.575	-170.60
2.0 GHz	0.927	174.24	3.07	53.29	0.014	-4.13	0.582	-170.97
2.1 GHz	0.928	173.32	2.91	51.32	0.013	-4.00	0.589	-171.36
2.2 GHz	0.928	172.41	2.76	49.38	0.013	-3.76	0.597	-171.79
2.3 GHz	0.929	171.53	2.63	47.46	0.013	-3.43	0.604	-172.24
2.4 GHz	0.929	170.65	2.51	45.57	0.013	-2.99	0.611	-172.71
2.5 GHz	0.929	169.79	2.40	43.71	0.013	-2.44	0.618	-173.22
2.6 GHz	0.930	168.93	2.30	41.87	0.013	-1.79	0.625	-173.75
2.7 GHz	0.930	168.08	2.20	40.05	0.012	-1.04	0.632	-174.30
2.8 GHz	0.931	167.24	2.12	38.26	0.012	-0.18	0.638	-174.87
2.9 GHz	0.931	166.40	2.04	36.48	0.012	0.77	0.645	-175.47
3.0 GHz	0.932	165.56	1.96	34.73	0.012	1.82	0.651	-176.08
3.2 GHz	0.932	163.88	1.82	31.28	0.012	4.18	0.663	-177.37
3.4 GHz	0.933	162.20	1.70	27.91	0.012	6.83	0.675	-178.72
3.6 GHz	0.934	160.51	1.60	24.60	0.012	9.69	0.686	179.86
3.8 GHz	0.934	158.80	1.51	21.35	0.012	12.64	0.696	178.39
4.0 GHz	0.935	157.07	1.42	18.16	0.013	15.58	0.706	176.88
4.2 GHz	0.935	155.32	1.35	15.01	0.013	18.40	0.715	175.31
4.4 GHz	0.935	153.53	1.29	11.91	0.014	21.01	0.723	173.70
4.6 GHz	0.935	151.70	1.23	8.84	0.014	23.33	0.730	172.05
4.8 GHz	0.935	149.84	1.17	5.80	0.015	25.32	0.737	170.36
5.0 GHz	0.935	147.93	1.13	2.79	0.016	26.96	0.743	168.63
5.2 GHz	0.935	145.98	1.09	-0.20	0.017	28.24	0.749	166.86
5.4 GHz	0.935	143.97	1.05	-3.19	0.018	29.16	0.754	165.05
5.6 GHz	0.934	141.91	1.01	-6.16	0.020	29.75	0.759	163.20
5.8 GHz	0.934	139.78	0.98	-9.14	0.021	30.02	0.763	161.30
6.0 GHz	0.933	137.58	0.96	-12.12	0.023	29.99	0.767	159.35

To download the s-parameters in s2p format, go to the CGH40025 Product page and click on the documentation tab.

© 2022 Wolfspeed, Inc. All rights reserved. Wolfspeed® and the Wolfstreak logo are registered trademarks and the Wolfspeed logo is a trademark of Wolfspeed, Inc.
The information in this document is subject to change without notice.
Downloaded from Arrow.com.

Product Dimensions CGH40025F (Package Type — 440166)

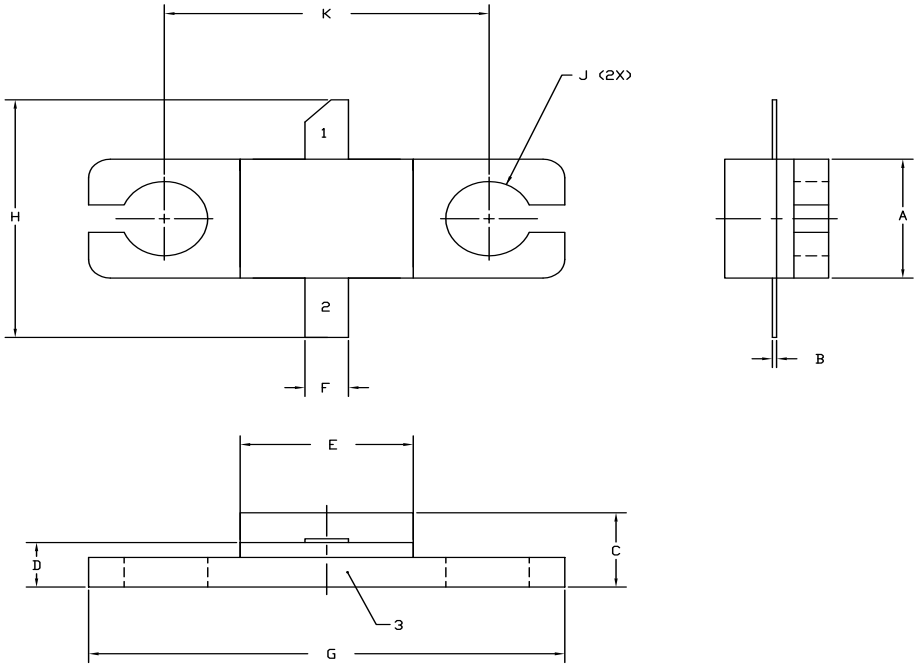

NOTES:

1. DIMENSIONING AND TOLERANCING PER ANSI Y14.5M, 1982.
2. CONTROLLING DIMENSION: INCH.
3. ADHESIVE FROM LID MAY EXTEND A MAXIMUM OF 0.020" BEYOND EDGE OF LID.
4. LID MAY BE MISALIGNED TO THE BODY OF THE PACKAGE BY A MAXIMUM OF 0.008" IN ANY DIRECTION.
5. ALL PLATED SURFACES ARE NI/AU

DIM	INCHES		MILLIMETERS	
	MIN	MAX	MIN	MAX
A	0.155	0.165	3.94	4.19
B	0.004	0.006	0.10	0.15
C	0.115	0.135	2.92	3.43
D	0.057	0.067	1.45	1.70
E	0.195	0.205	4.95	5.21
F	0.045	0.055	1.14	1.40
G	0.545	0.555	13.84	14.09
H	0.280	0.360	7.11	9.14
J	ø .100		2.54	
K	0.375		9.53	

PIN 1. GATE
PIN 2. DRAIN
PIN 3. SOURCE

Product Dimensions CGH400265P (Package Type — 440196)

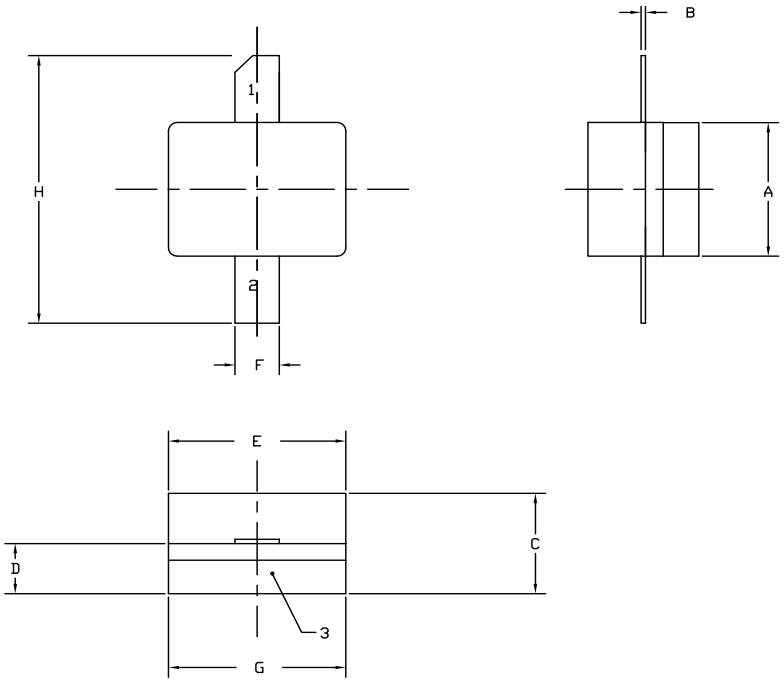

NOTES:

1. DIMENSIONING AND TOLERANCING PER ANSI Y14.5M, 1982.
2. CONTROLLING DIMENSION: INCH.
3. ADHESIVE FROM LID MAY EXTEND A MAXIMUM OF 0.020" BEYOND EDGE OF LID.
4. LID MAY BE MISALIGNED TO THE BODY OF THE PACKAGE BY A MAXIMUM OF 0.008" IN ANY DIRECTION.
5. ALL PLATED SURFACES ARE NI/AU

DIM	INCHES		MILLIMETERS	
	MIN	MAX	MIN	MAX
A	0.155	0.165	3.94	4.19
B	0.003	0.006	0.10	0.15
C	0.115	0.135	2.92	3.17
D	0.057	0.067	1.45	1.70
E	0.195	0.205	4.95	5.21
F	0.045	0.055	1.14	1.40
G	0.195	0.205	4.95	5.21
H	0.280	0.360	7.11	9.14

PIN 1. GATE
PIN 2. DRAIN
PIN 3. SOURCE

© 2022 Wolfspeed, Inc. All rights reserved. Wolfspeed® and the Wolfstreak logo are registered trademarks and the Wolfspeed logo is a trademark of Wolfspeed, Inc.
The information in this document is subject to change without notice.
Downloaded from Arrow.com.

Product Ordering Information

Order Number	Description	Unit of Measure	Image
CGH40025F	GaN HEMT	Each	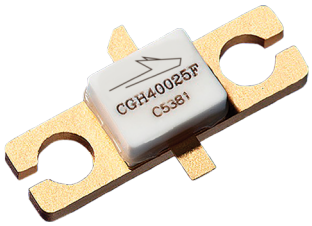
CGH40025P	GaN HEMT	Each	
CGH40025F-AMP	Test board with GaN HEMT installed	Each	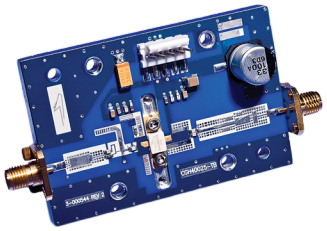

© 2022 Wolfspeed, Inc. All rights reserved. Wolfspeed® and the Wolfstreak logo are registered trademarks and the Wolfspeed logo is a trademark of Wolfspeed, Inc.
The information in this document is subject to change without notice.
Downloaded from Arrow.com.

For more information, please contact:

4600 Silicon Drive
Durham, NC 27703 USA
Tel: +1.919.313.5300
www.wolfspeed.com/RF

Sales Contact
RFSales@wolfspeed.com

RF Product Marketing Contact
RFMarketing@wolfspeed.com

Notes & Disclaimer

Specifications are subject to change without notice. "Typical" parameters are the average values expected by Wolfspeed in large quantities and are provided for information purposes only. Wolfspeed products are not warranted or authorized for use as critical components in medical, life-saving, or life-sustaining applications, or other applications where a failure would reasonably be expected to cause severe personal injury or death. No responsibility is assumed by Wolfspeed for any infringement of patents or other rights of third parties which may result from use of the information contained herein. No license is granted by implication or otherwise under any patent or patent rights of Wolfspeed.

© 2007-2022 Wolfspeed, Inc. All rights reserved. Wolfspeed® and the Wolfstreak logo are registered trademarks and the Wolfspeed logo is a trademark of Wolfspeed, Inc.
PATENT: https://www.wolfspeed.com/legal/patents

The information in this document is subject to change without notice.

© 2022 Wolfspeed, Inc. All rights reserved. Wolfspeed® and the Wolfstreak logo are registered trademarks and the Wolfspeed logo is a trademark of Wolfspeed, Inc.
The information in this document is subject to change without notice.
Downloaded from Arrow.com.