Features

- Compact Metal Case with Excellent Thermal Performance
- Full Power at Wide Output Current Range (Constant Power)
- Adjustable Output Current (AOC) with Programmability
- Isolated 1-5V/1-10V/10V PWM/3-Timer-Modes Dimmable
- Output Lumen Compensation
- Input Surge Protection: DM 6kV, CM 10kV
- All-Around Protection: OVP, SCP, OTP
- IP66/IP67 and UL Dry/Damp/Wet Location
- SELV Output
- TYPE HL, for use in a Class I, Division 2 hazardous (Classified) location
- 5 Years Warranty

Description

The *EUM-200SxxxDx* series is a 200W, constant-current, programmable IP67 LED driver that operates from 90-305Vac input with excellent power factor. It is created for many lighting applications including high bay, high mast and roadway, etc. The high efficiency of these drivers and compact metal case enables them to run cooler, significantly improving reliability and extending product life. To ensure trouble-free operation, protection is provided against input surge, output over voltage, short circuit, and over temperature.

Models

Adjustable Output Current Range	Full-Power Current Range (1)	Default Output Current	Input Voltage Range(2)	Output Voltage Range	Max. Output Power	Typical Efficiency (3)	Typical Power Factor		Model Number (4) (5)
							120Vac	220Vac	
53-700mA	530-700mA	530 mA	90~305 Vac/ 127~300 Vdc	142~378 Vdc	200 W	94.0%	0.99	0.96	EUM-200S070Dx(6)
70-1050mA	700-1050mA	700 mA	90~305 Vac/ 127~300 Vdc	95~286 Vdc	200 W	93.5%	0.99	0.96	EUM-200S105Dx
105-1500mA	1050-1500mA	1050 mA	90~305 Vac/ 127~300 Vdc	67~190 Vdc	200 W	93.0%	0.99	0.96	EUM-200S150Dx
180-2800mA	1800-2800mA	2100 mA	90~305 Vac/ 127~300 Vdc	36~111 Vdc	200 W	92.5%	0.99	0.96	EUM-200S280Dx(7)
350-5600mA	3500-5600mA	4200 mA	90~305 Vac/ 127~300 Vdc	18 ~ 57 Vdc	200 W	92.0%	0.99	0.96	EUM-200S560Dx(7)

Notes: (1) Output current range with constant power at 200W.
(2) Certified input voltage range: UL, FCC 100-277Vac; otherwise 100-240Vac.
(3) Measured at 100% load and 220Vac input (see below "General Specifications" for details).
(4) x = G are UL Recognized, ENEC and CCC, etc. models; x = T are UL Class P models; x = B are BIS models.
(5) All the models are certificated to KS, except EUM-200S070Dx and EUM-200S105Dx.
(6) Only available with x = G, and only with ENEC, CE, CB and CCC certificates.
(7) SELV output.

Downloaded from Arrow.com.

I-V Operation Area

EUM-200S070Dx

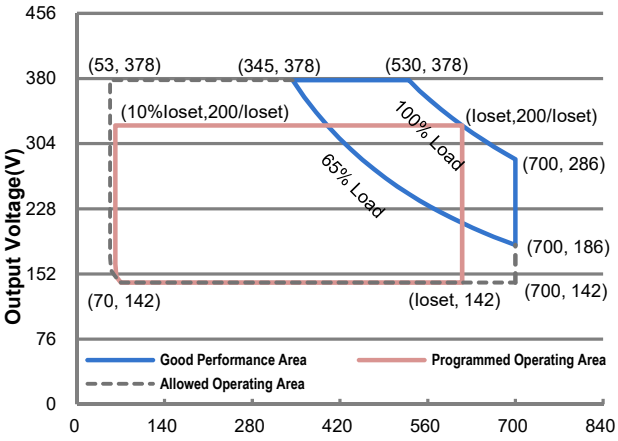

Note: 530mA≤Ioset≤700mA

EUM-200S105Dx

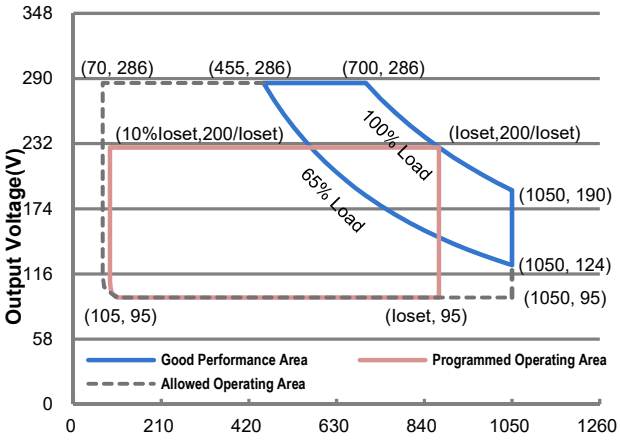

Note: 700mA≤Ioset≤1050mA

EUM-200S150Dx

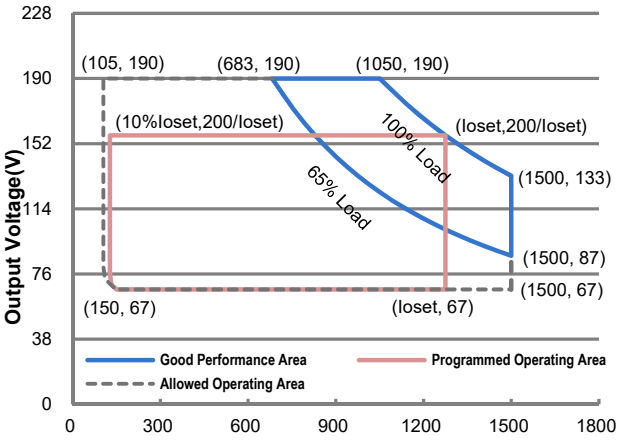

Note: 1050mA≤Ioset≤1500mA

EUM-200S280Dx

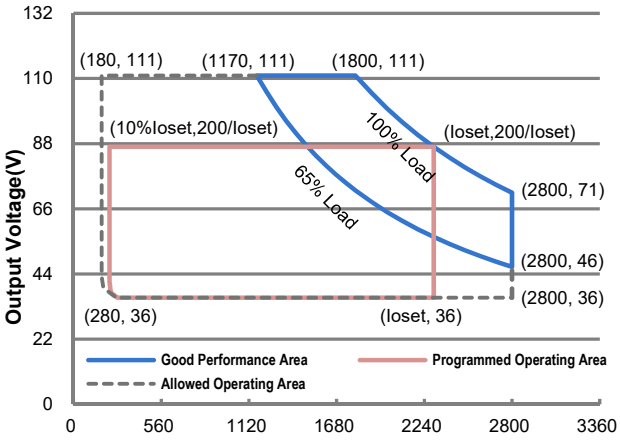

Note: 1800mA≤Ioset≤2800mA

EUM-200S560Dx

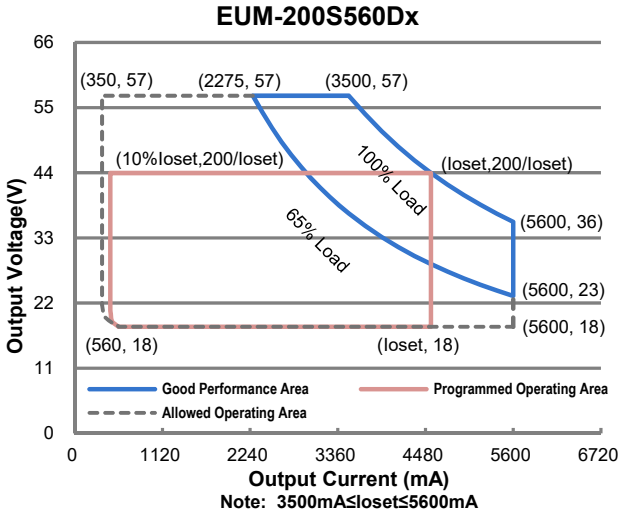

Note: 3500mA≤Ioset≤5600mA

Downloaded from Arrow.com.

Input Specifications

Parameter	Min.	Typ.	Max.	Notes
Input AC Voltage	90 Vac	-	305 Vac	
Input DC Voltage	127 Vdc	-	300 Vdc	
Input Frequency	47 Hz	-	63 Hz	
Leakage Current	-	-	0.75 MIU	UL 8750; 277Vac/60Hz
	-	-	0.70 mA	IEC60598-1; 240Vac/60Hz
Input AC Current	-	-	2.00 A	Measured at 100% load and 120 Vac input.
	-	-	1.05 A	Measured at 100% load and 220 Vac input.
Inrush Current(I^2t)	-	-	4.20 A^2s	At 220Vac input, 25°C cold start, duration=848 μs, 10%Ipk-10%Ipk. See Inrush Current Waveform for the details.
PF	0.9	-	-	At 100-277Vac, 50-60Hz, 65%-100% Load (130-200W)
THD	-	-	20%	
THD	-	-	10%	At 220-240Vac, 50-60Hz, 75%-100% Load (150-200W)

Output Specifications

Parameter	Min.	Typ.	Max.	Notes
Output Current Tolerance	-5%Ioset	-	5%Ioset	At 100% load condition
Output Current Setting(Ioset) Range				
EUM-200S070Dx	53 mA	-	700 mA	
EUM-200S105Dx	70 mA	-	1050 mA	
EUM-200S150Dx	105 mA	-	1500 mA	
EUM-200S280Dx	180 mA	-	2800 mA	
EUM-200S560Dx	350 mA	-	5600 mA	
Output Current Setting Range with Constant Power				
EUM-200S070Dx	530 mA	-	700 mA	
EUM-200S105Dx	700 mA	-	1050 mA	
EUM-200S150Dx	1050 mA	-	1500 mA	
EUM-200S280Dx	1800 mA	-	2800 mA	
EUM-200S560Dx	3500 mA	-	5600 mA	
Total Output Current Ripple (pk-pk)	-	5%Iomax	10%Iomax	At 100% load condition. 20 MHz BW
Output Current Ripple at < 200 Hz (pk-pk)	-	2%Iomax	-	At 100% load condition. Only this component of ripple is associated with visible flicker.
Startup Overshoot Current	-	-	10%Iomax	At 100% load condition
No Load Output Voltage				
EUM-200S070Dx	-	-	420 V	
EUM-200S105Dx	-	-	320 V	
EUM-200S150Dx	-	-	210 V	
EUM-200S280Dx	-	-	120 V	
EUM-200S560Dx	-	-	65 V	

Downloaded from Arrow.com.

Output Specifications (Continued)

Parameter	Min.	Typ.	Max.	Notes
Line Regulation	-	-	±0.5%	Measured at 100% load
Load Regulation	-	-	±1.5%	
Turn-on Delay Time	-	-	0.5 s	Measured at 120-277Vac input, 65%-100% Load
Temperature Coefficient of Ioset	-	0.03%/°C	-	Case temperature = 0°C ~Tc max

General Specifications

Parameter	Min.	Typ.	Max.	Notes
Efficiency at 120 Vac input:				Measured at 100% load and steady-state temperature in 25°C ambient; (Efficiency will be about 2.0% lower if measured immediately after startup.)
EUM-200S070Dx				
Io= 530 mA	89.0%	91.0%	-	
Io= 700 mA	89.5%	91.5%	-	
EUM-200S105Dx				
Io= 700 mA	88.5%	90.5%	-	
Io=1050 mA	89.0%	91.0%	-	
EUM-200S150Dx				
Io=1050 mA	88.5%	90.5%	-	
Io=1500 mA	88.5%	90.5%	-	
EUM-200S280Dx				
Io=1800 mA	87.0%	89.0%	-	
Io=2800 mA	87.0%	89.0%	-	
EUM-200S560Dx				
Io=3500 mA	87.5%	89.5%	-	
Io=5600 mA	87.0%	89.0%	-	
Efficiency at 220 Vac input:				Measured at 100% load and steady-state temperature in 25°C ambient; (Efficiency will be about 2.0% lower if measured immediately after startup.)
EUM-200S070Dx				
Io= 530 mA	92.0%	94.0%	-	
Io= 700 mA	92.0%	94.0%	-	
EUM-200S105Dx				
Io= 700 mA	91.5%	93.5%	-	
Io=1050 mA	91.5%	93.5%	-	
EUM-200S150Dx				
Io=1050 mA	91.0%	93.0%	-	
Io=1500 mA	91.0%	93.0%	-	
EUM-200S280Dx				
Io=1800 mA	90.5%	92.5%	-	
Io=2800 mA	90.0%	92.0%	-	
EUM-200S560Dx				
Io=3500 mA	90.0%	92.0%	-	
Io=5600 mA	89.5%	91.5%	-	

Downloaded from Arrow.com.

General Specifications (Continued)

Parameter	Min.	Typ.	Max.	Notes
Efficiency at 277 Vac input: EUM-200S070Dx Io= 530 mA Io= 700 mA EUM-200S105Dx Io= 700 mA Io=1050 mA EUM-200S150Dx Io=1050 mA Io=1500 mA EUM-200S280Dx Io=1800 mA Io=2800 mA EUM-200S560Dx Io=3500 mA Io=5600 mA	 92.0% 92.5% 92.0% 92.0% 91.5% 91.5% 91.0% 90.5% 90.5% 90.0%	 94.0% 94.5% 94.0% 94.0% 93.5% 93.5% 93.0% 92.5% 92.5% 92.0%	 - - - - - - - - - -	Measured at 100% load and steady-state temperature in 25°C ambient; (Efficiency will be about 2.0% lower if measured immediately after startup.)
MTBF	-	267,000 Hours	-	Measured at 220Vac input, 80%Load and 25°C ambient temperature (MIL-HDBK-217F)
Lifetime	-	100,000 Hours	-	Measured at 220Vac input, 80%Load and 70°C case temperature; See lifetime vs. Tc curve for the details
Operating Case Temperature for Safety Tc_s	-40°C	-	+90°C	
Operating Case Temperature for Warranty Tc_w	-40°C	-	+80°C	Case temperature for 5 years warranty Humidity: 10%RH to 95%RH
Storage Temperature	-40°C	-	+85°C	Humidity: 5%RH to 95%RH
Dimensions Inches (L × W × H) Millimeters (L × W × H)	 6.73 × 2.36 × 1.44 171 × 60 × 36.5			With mounting ear 7.40 × 2.36 × 1.44 188 × 60 × 36.5
Net Weight	-	780 g	-	

Dimming Specifications

Parameter		Min.	Typ.	Max.	Notes
Absolute Maximum Voltage on the Vdim (+) Pin		-20 V	-	20 V	
Source Current on Vdim (+)Pin		200 μA	300 μA	450 μA	Vdim(+) = 0 V
Dimming Output Range	EUM-200S070Dx EUM-200S105Dx EUM-200S150Dx EUM-200S280Dx EUM-200S560Dx	10%Ioset	-	Ioset	530 mA ≤ Ioset ≤ 700 mA 700 mA ≤ Ioset ≤ 1050 mA 1050 mA ≤ Ioset ≤ 1500 mA 1800 mA ≤ Ioset ≤ 2800 mA 3500 mA ≤ Ioset ≤ 5600 mA
	EUM-200S070Dx EUM-200S105Dx EUM-200S150Dx EUM-200S280Dx EUM-200S560Dx	53 mA 70 mA 105 mA 180 mA 350 mA	-	Ioset	53 mA ≤ Ioset < 530 mA 70 mA ≤ Ioset < 700 mA 105 mA ≤ Ioset < 1050 mA 180 mA ≤ Ioset < 1800 mA 350 mA ≤ Ioset < 3500 mA
Recommended Dimming Range for 1-5V		0.25 V	-	4.75 V	Dimming mode set to 1-5V in PC interface.
Recommended Dimming Range for 1-10V		1 V	-	9 V	Default 1-10V dimming mode with positive logic.

Downloaded from Arrow.com.

Dimming Specifications (Continued)

Parameter	Min.	Typ.	Max.	Notes
PWM_in High Level	-	10V	-	
PWM_in Low Level	-	0V	-	
PWM_in Frequency Range	200 Hz	-	2 KHz	
PWM_in Duty Cycle	0%	-	100%	

Safety &EMC Compliance

Safety Category	Standard
UL/CUL	UL 8750,CAN/CSA-C22.2 No. 250.13
ENEC & CE	EN 61347-1, EN 61347-2-13
UKCA	BS EN 61347-1, BS EN 61347-2-13
CB	IEC 61347-1, IEC 61347-2-13
CCC	GB 19510.1, GB 19510.14
PSE	J 61347-1, J 61347-2-13
KS	KS C 7655
BIS	IS 15885(Part2/Sec13)
EAC	TP TC 004, TP TC 020
NOM	NOM-058-SCFI
SAA	AS/NZS 61347.1, AS/NZS 61347.2.13
Performance	**Standard**
ENEC	EN 62384
EMI Standards	**Notes**
BS EN/EN IEC 55015/GB/T 17743/KN 15(1)	Conducted emission Test &Radiated emission Test
BS EN/EN IEC 61000-3-2/GB 17625.1	Harmonic current emissions
BS EN/EN 61000-3-3	Voltage fluctuations & flicker
FCC Part 15(1)	ANSI C63.4 Class B
	This device complies with Part 15 of the FCC Rules. Operation is subject to the following two conditions: [1] this device may not cause harmful interference, and [2] this device must accept any interference received, including interference that may cause undesired Operation.
EMS Standards	**Notes**
BS EN/EN 61000-4-2	Electrostatic Discharge (ESD): 8 kV air discharge, 4 kV contact discharge
BS EN/EN 61000-4-3	Radio-Frequency Electromagnetic Field Susceptibility Test-RS

Downloaded from Arrow.com.

Safety &EMC Compliance (Continued)

EMS Standards	Notes
BS EN/EN 61000-4-4	Electrical Fast Transient / Burst-EFT
BS EN/EN 61000-4-5	Surge Immunity Test: AC Power Line: Differential Mode 6 kV, Common Mode 10 kV
BS EN/EN 61000-4-6	Conducted Radio Frequency Disturbances Test-CS
BS EN/EN 61000-4-8	Power Frequency Magnetic Field Test
BS EN/EN 61000-4-11	Voltage Dips
BS EN/EN 61547	Electromagnetic Immunity Requirements Applies To Lighting Equipment

Note: (1) This LED driver meets the EMI specifications above, but EMI performance of a luminaire that contains it depends also on the other devices connected to the driver and on the fixture itself.

Derating

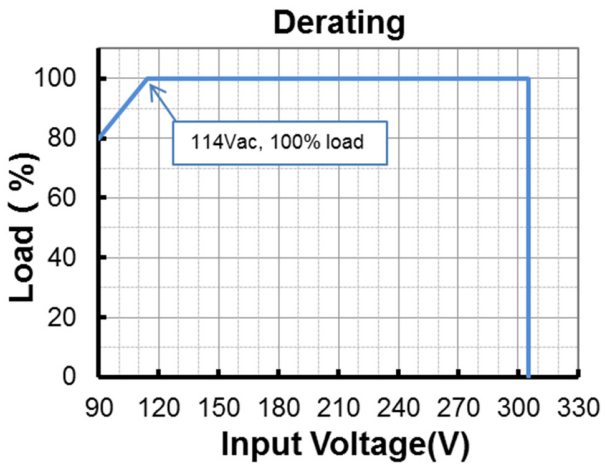

Lifetime vs. Case Temperature

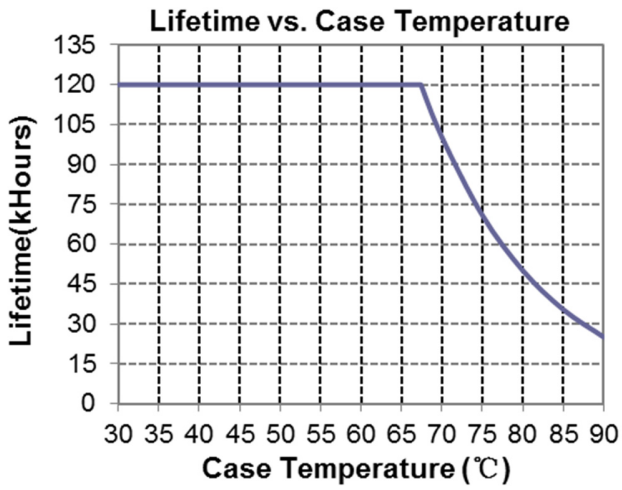

Downloaded from Arrow.com.

Inrush Current Waveform

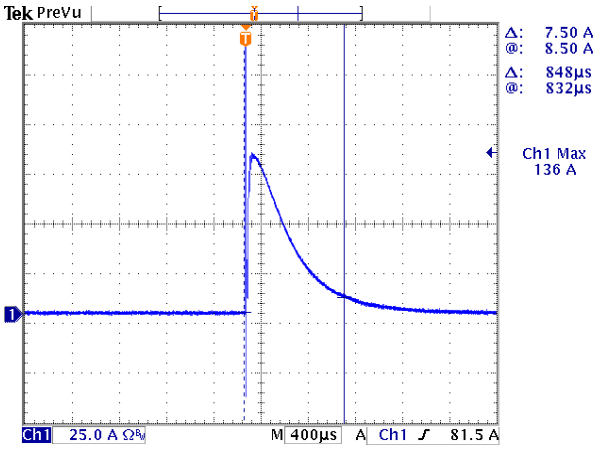

Efficiency vs. Load

EUM-200S070Dx(Io=530mA)

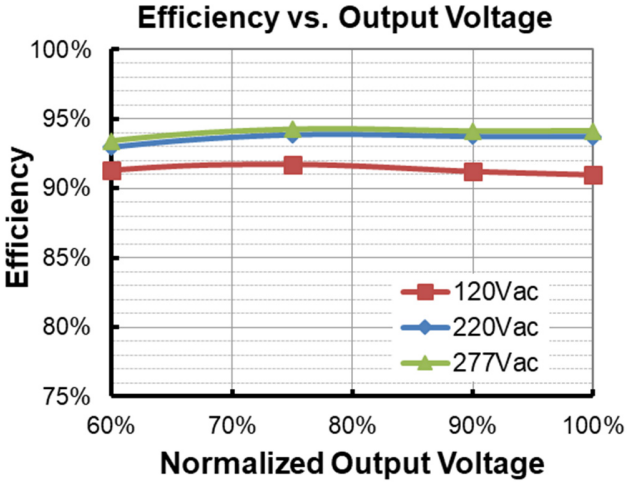

EUM-200S070Dx(Io=700mA)

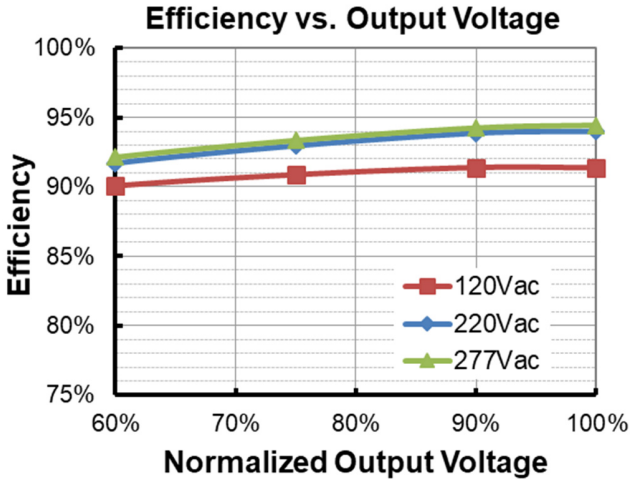

EUM-200S105Dx(Io=700mA)

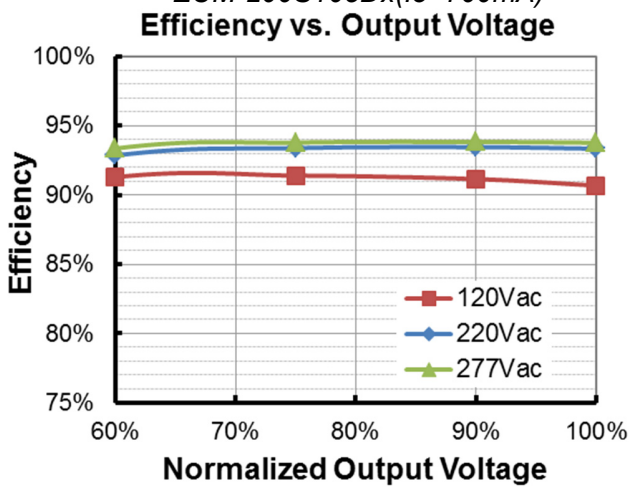

EUM-200S105Dx(Io=1050mA)

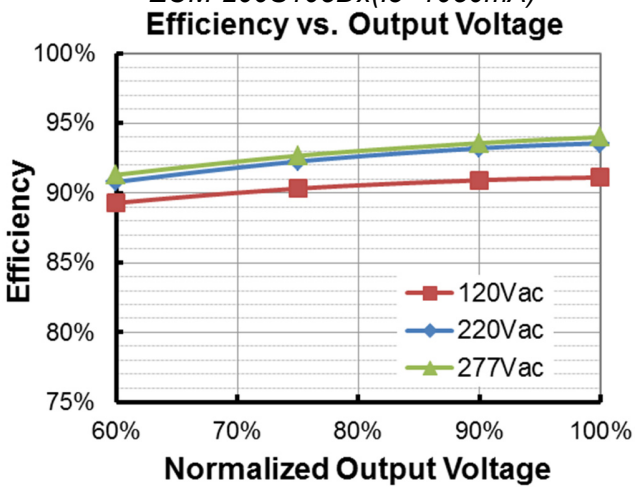

Downloaded from Arrow.com.

EUM-200S150Dx(Io=1050mA)

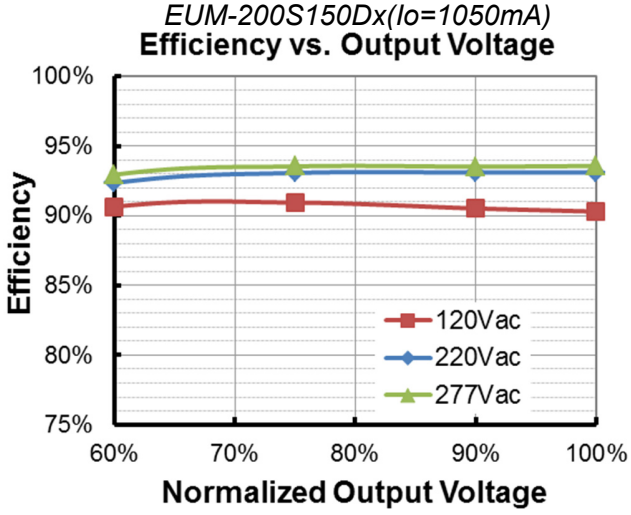

EUM-200S150Dx(Io=1500mA)

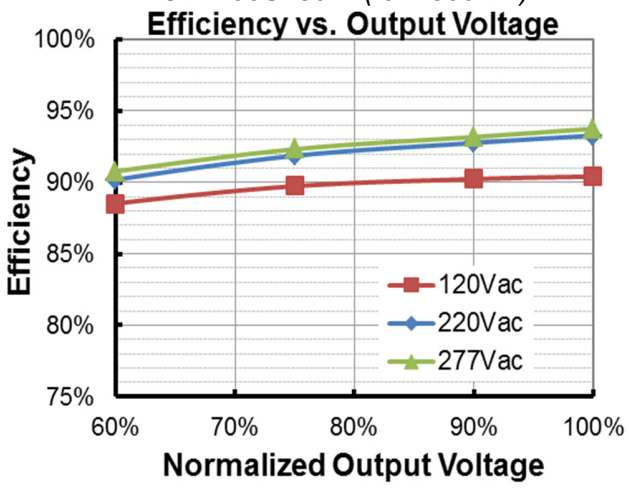

EUM-200S280Dx(Io=1800mA)

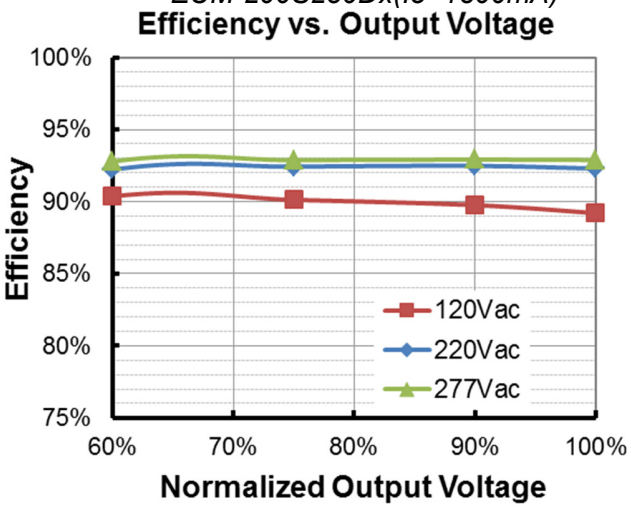

EUM-200S280Dx(Io=2800mA)

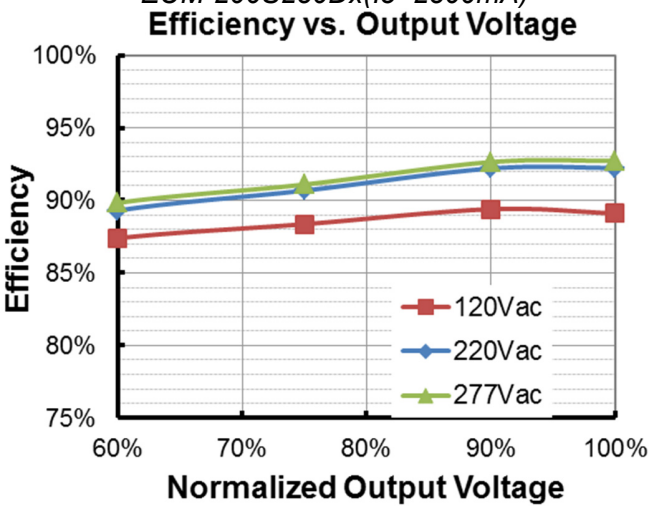

EUM-200S560Dx(Io=3500mA)

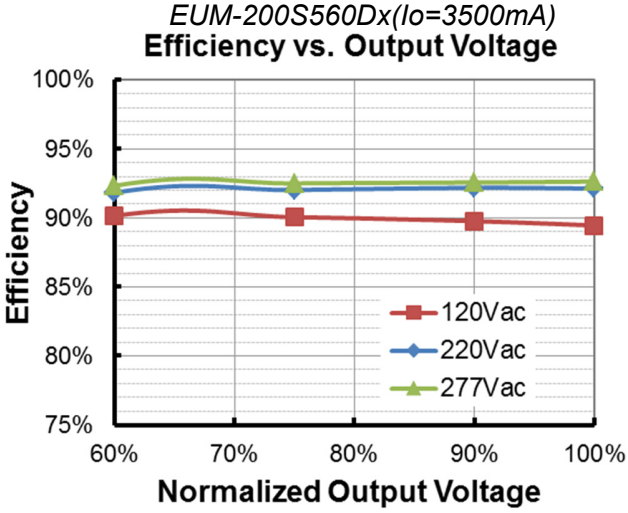

EUM-200S560Dx(Io=5600mA)

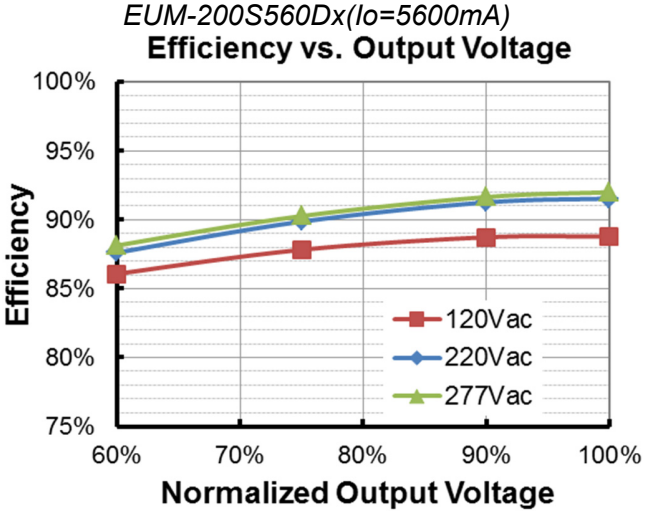

Downloaded from Arrow.com.

Power Factor

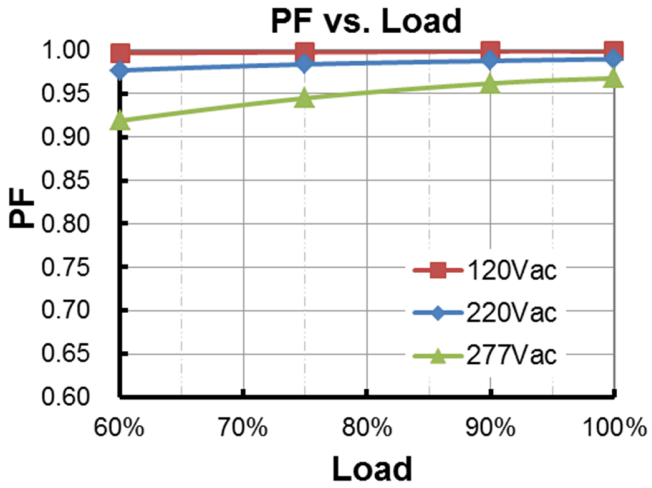

Total Harmonic Distortion

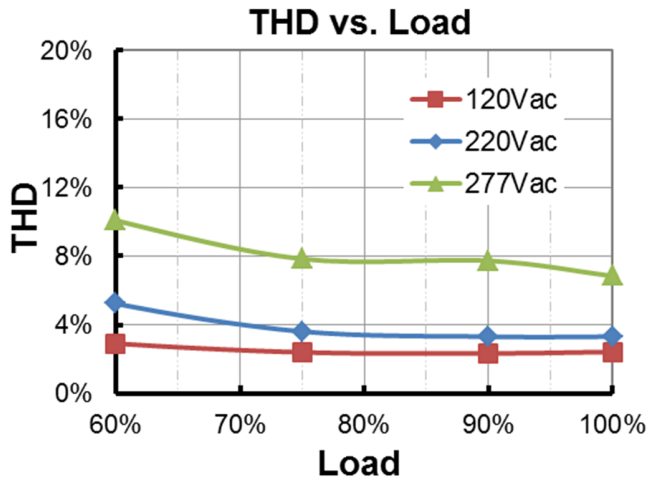

Protection Functions

Parameter	Notes
Over Temperature Protection	Decreases output current, returning to normal after over temperature is removed.
Short Circuit Protection	Auto Recovery. No damage will occur when any output is short circuited. The output shall return to normal when the fault condition is removed.
Over Voltage Protection	Limits output voltage at no load and in case the normal voltage limit fails.

Dimming

- **1-5V Dimming**

The recommended implementation of the dimming control is provided below.

Downloaded from Arrow.com.

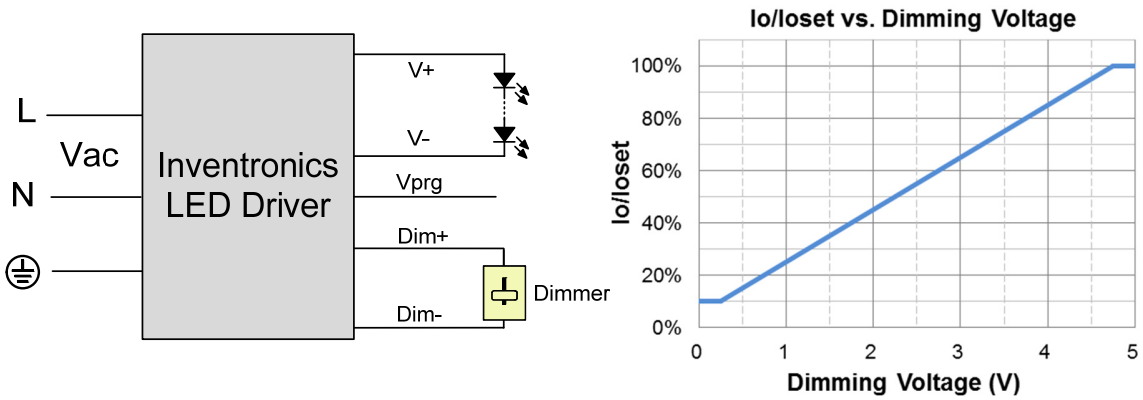

Implementation 1: Positive logic

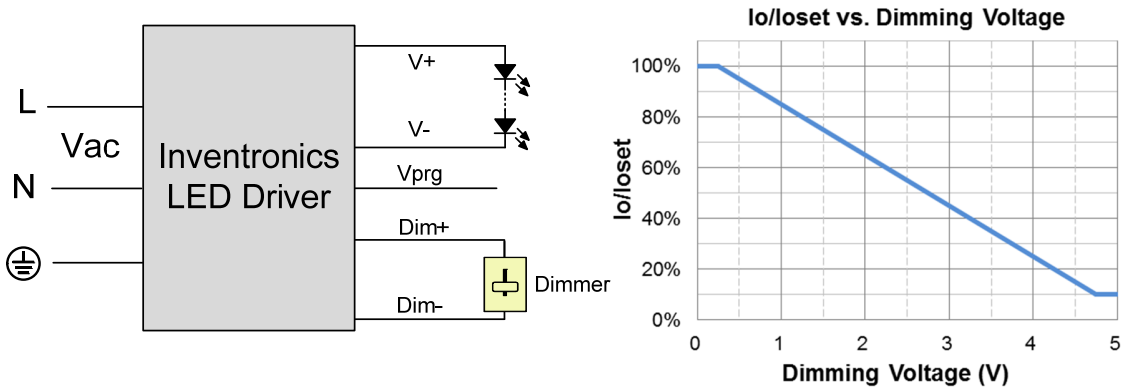

Implementation 2: Negative logic

Notes:

1. Do NOT connect Dim− to the output V− or V+, otherwise the driver will not work properly.
2. The dimmer can also be replaced by an active 1-5V voltage source signal or passive components like zener.
3. When 1-5V negative logic dimming mode and Dim+ is open, the driver will output maximum current.

● 1-10V Dimming

The recommended implementation of the dimming control is provided below.

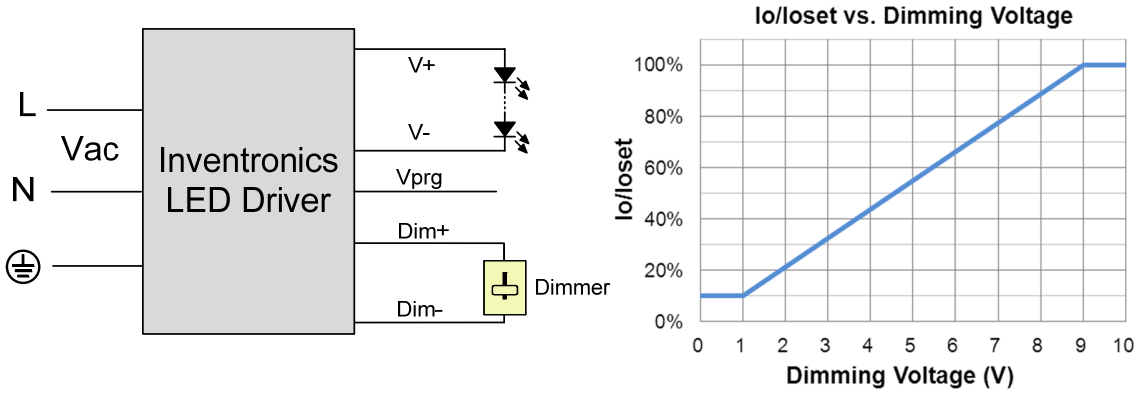

Implementation 3: Positive logic

Downloaded from Arrow.com.

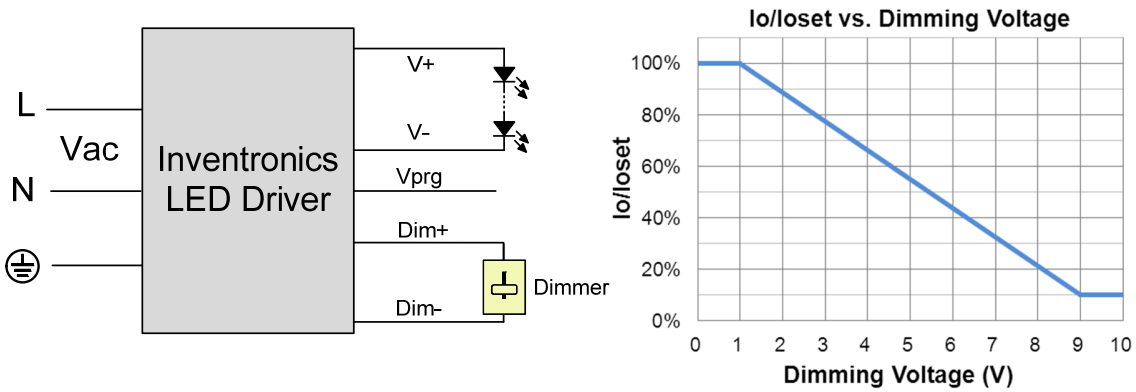

Implementation 4: Negative logic

Notes:

1. Do NOT connect Dim− to the output V− or V+, otherwise the driver will not work properly.
2. The dimmer can also be replaced by an active 1-10V voltage source signal or passive components like zener.
3. When 1-10V negative logic dimming mode and Dim+ is open, the driver will output minimum current.

● 10V PWM Dimming

The recommended implementation of the dimming control is provided below.

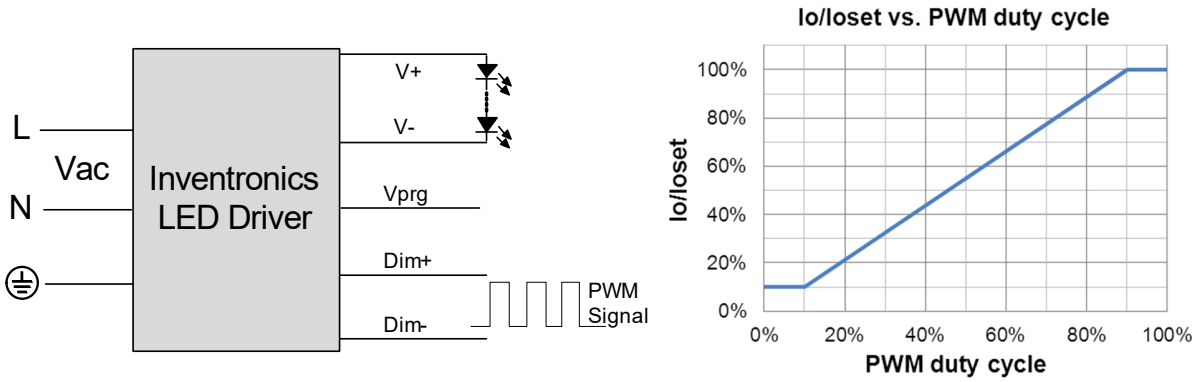

Implementation 5: Positive logic

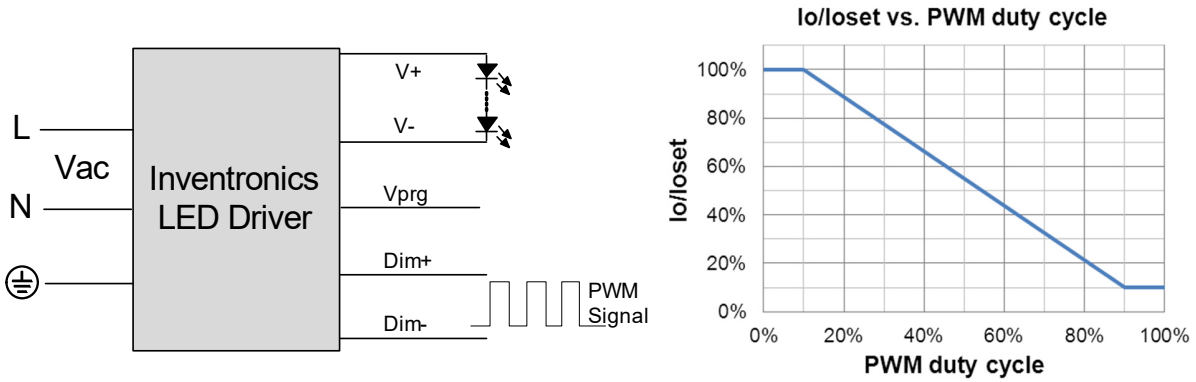

Implementation 6: Negative logic

Notes:

1. Do NOT connect Dim− to the output V− or V+, otherwise the driver will not work properly.
2. When 10V PWM negative logic dimming mode and Dim+ is open, the driver will output minimum current.

Downloaded from Arrow.com.

- **Time Dimming**
  Time dimming control includes 3 kinds of modes, they are Self Adapting-Midnight, Self Adapting-Percentage and Traditional Timer.
  - **Self Adapting-Midnight**: Automatically adjusts the dimming curve based on the on-time of past two days (if difference <15 minutes), assuming that the center point of the dimming curve is midnight local time.
  - **Self Adapting-Percentage**: Automatically adjusts the on-time of each step by a constant percentage = (actual on-time for the past 2 days if difference <15 min) / (programmed on-time from the dimming curve).
  - **Traditional Timer**: Follows the programmed timing curve after power on with no changes.

- **Output Lumen Compensation**
  Output Lumen Compensation (OLC) may be used to maintain constant light output over the life of the LEDs by driving them at a reduced current when new, then gradually increasing the drive current over time to counteract LED lumen degradation.

Programming Connection Diagram

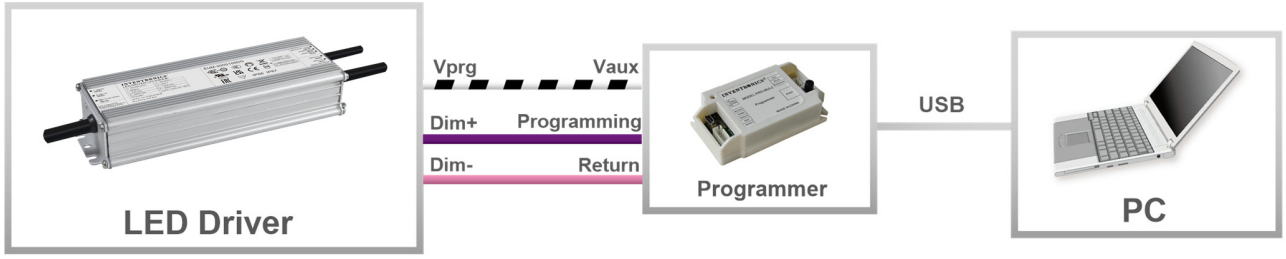

Note: The driver does not need to be powered on during the programming process.

- **Please refer to PRG-MUL2 (Programmer) datasheet for details.**

Mechanical Outline

EUM-200S070/105/150DG

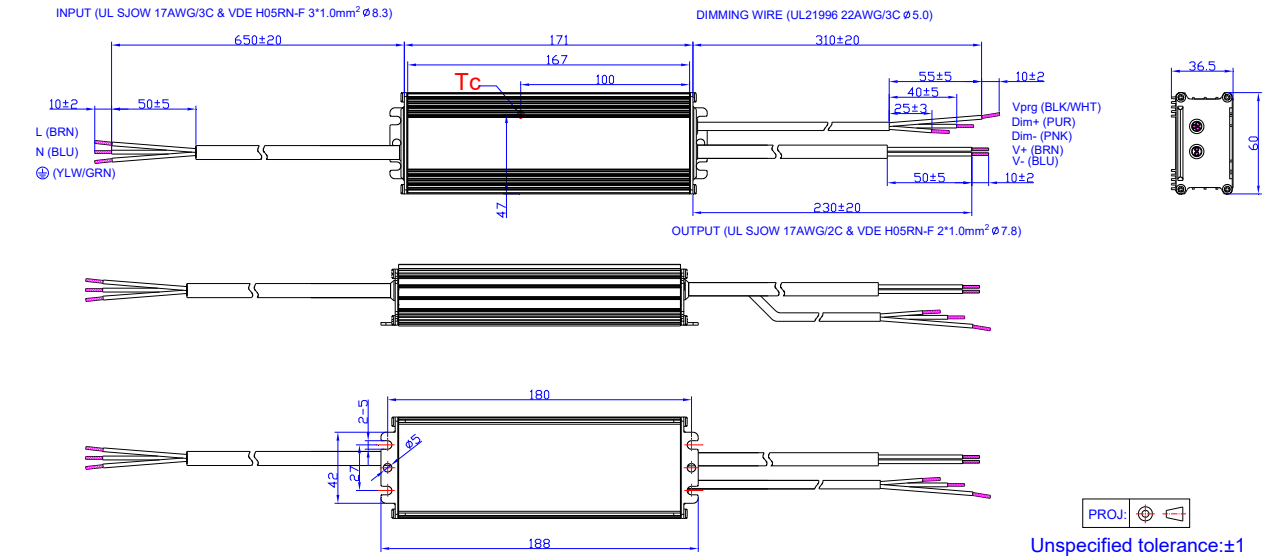

Downloaded from Arrow.com.

EUM-200S280/560DG

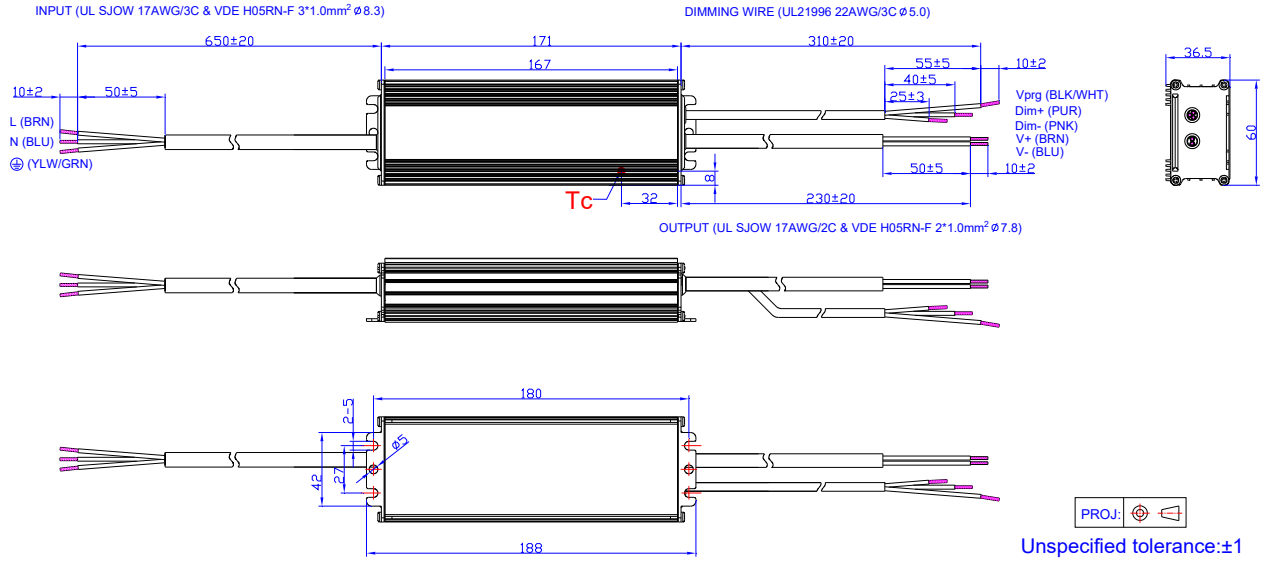

Unspecified tolerance:±1

EUM-200S105/150DT

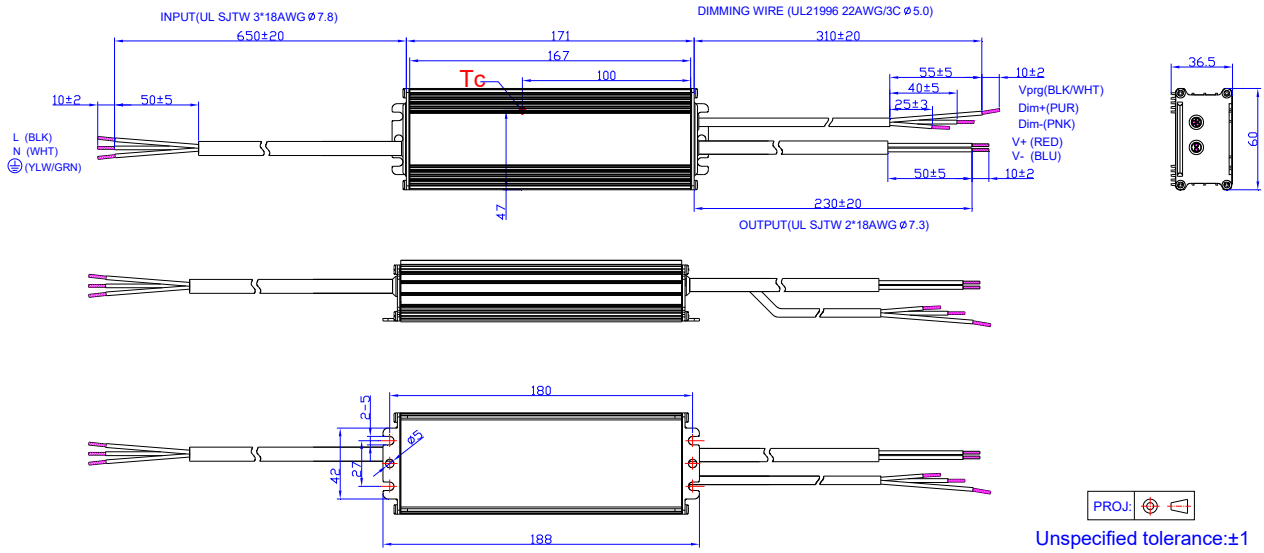

Unspecified tolerance:±1

Downloaded from Arrow.com.

EUM-200S280/560DT

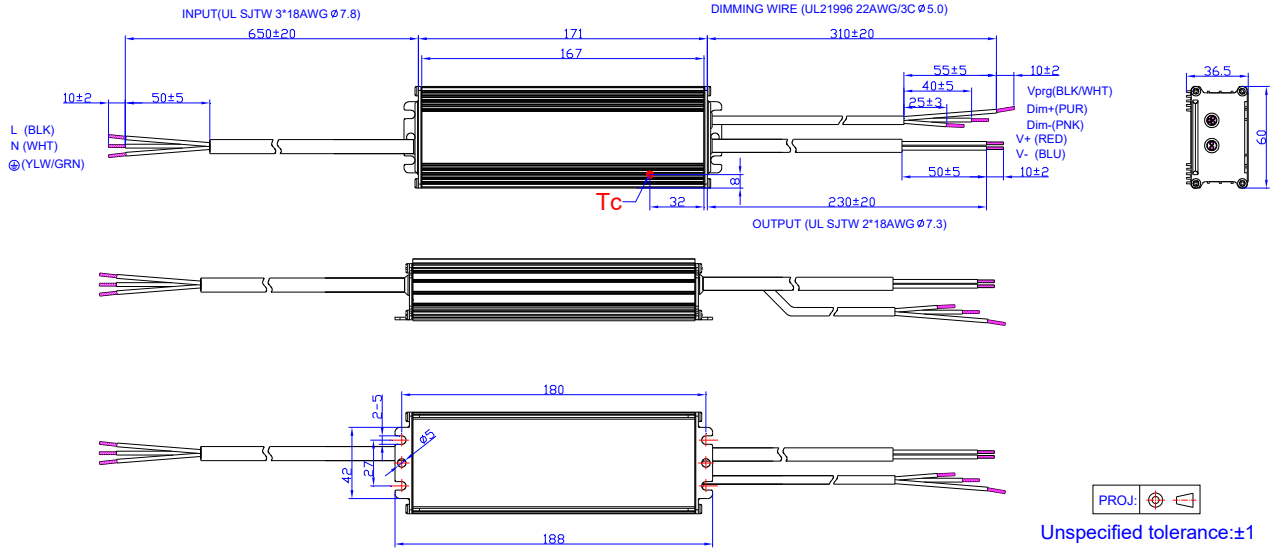

Unspecified tolerance:±1

EUM-200S105/150DB

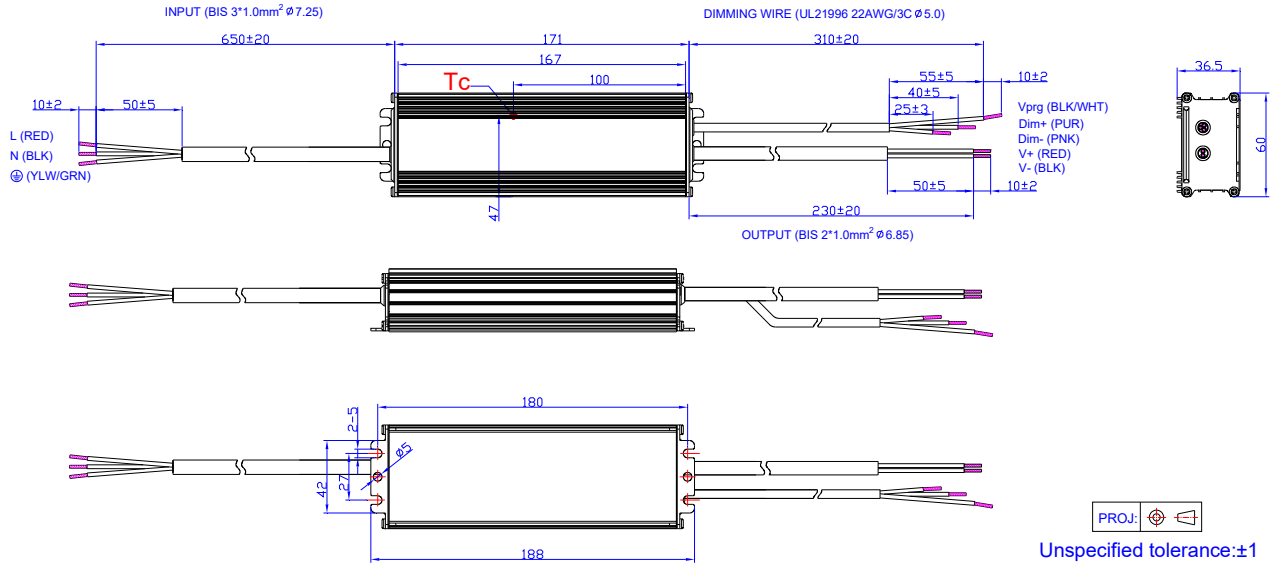

Unspecified tolerance:±1

Downloaded from Arrow.com.

EUM-200S280/560DB

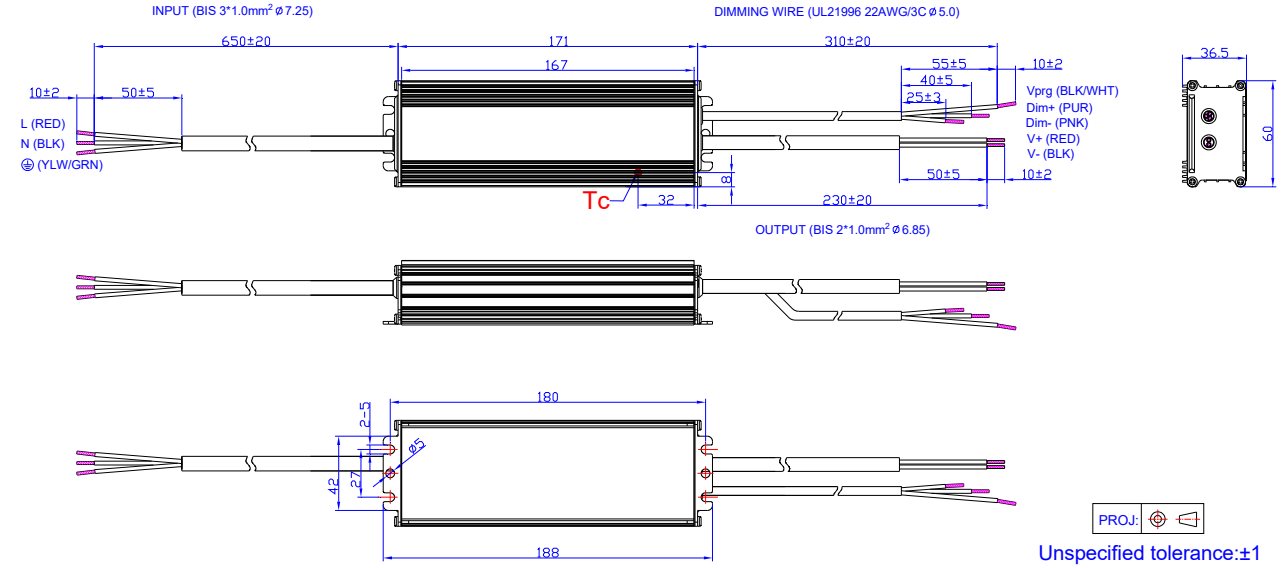

RoHS Compliance

Our products comply with reference to RoHS Directive (EU) 2015/863 amending 2011/65/EU, calling for the elimination of lead and other hazardous substances from electronic products.

Downloaded from Arrow.com.

Revision History

Change Date	Rev.	Description of Change		
		Item	From	To
2021-03-09	A	Datasheets Release	/	/
2021-09-23	B	Models	EUM-200S070Dx	Added
		Models	Notes(6)、(7)	Added
		I-V Operation Area	EUM-200S070Dx	Added
		Output Current Setting(Ioset) Range	EUM-200S070Dx	Added
		Output Current Setting Range with Constant Power	EUM-200S070Dx	Added
		No Load Output Voltage	EUM-200S070Dx	Added
		Efficiency at 120 Vac input:	EUM-200S070Dx	Added
		Efficiency at 220 Vac input:	EUM-200S070Dx	Added
		Efficiency at 277 Vac input:	EUM-200S070Dx	Added
		Dimming Output Range	EUM-200S070Dx	Added
		Efficiency vs. Load	EUM-200S070Dx	Added
		Mechanical Outline	EUM-200S070DG	Added
2021-12-24	C	UKCA logo	/	Added
		General Specifications	Net Weight	Updated
		Safety &EMC Compliance	UKCA	Added
		Dimming Output Range	Note	Updated
		Programming Connection Diagram	EUM-200SxxxDT	Updated
		Mechanical Outline	/	Updated
2023-06-19	D	Product Photograph	/	Updated
		SAA	/	Added
		I-V Operation Area	/	Updated
		Safety &EMC Compliance	/	Updated
		Dimming	/	Updated
		Programming Connection Diagram	/	Updated
		Mechanical Outline	/	Updated

Downloaded from Arrow.com.